Bipolar Junction Transistors

EECS 320

Introduction to Semiconductor Devices

Transistor Types

In general, there are two types of transistors

Bipolar (BJT)

A three terminal device in which emitter to collector current is controlled by base current

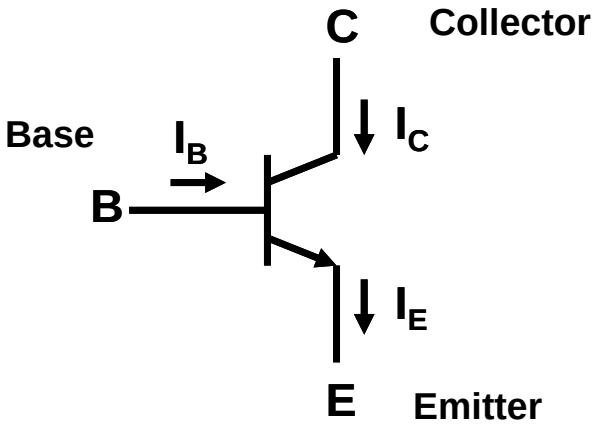

Field-effect (FET)

A transistor in which the output current is controlled by a variable electric field (gate voltage)

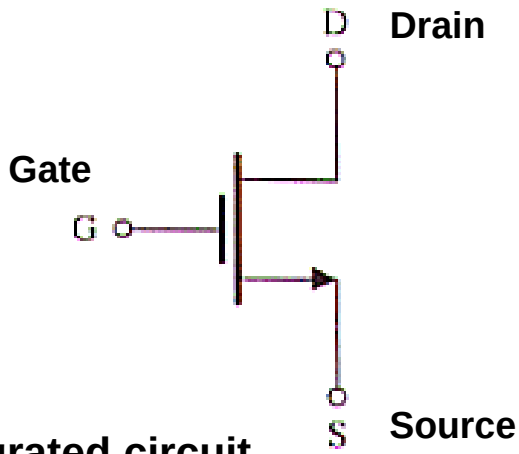

Single device

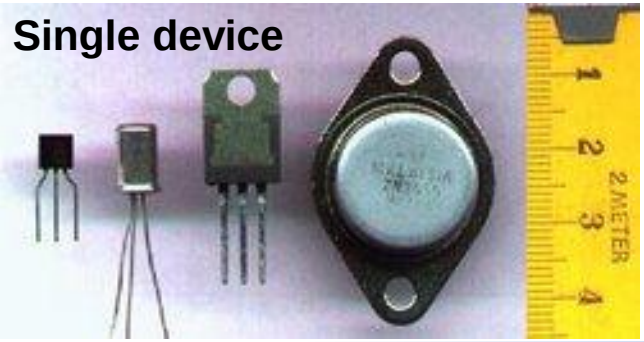

Integrated circuit

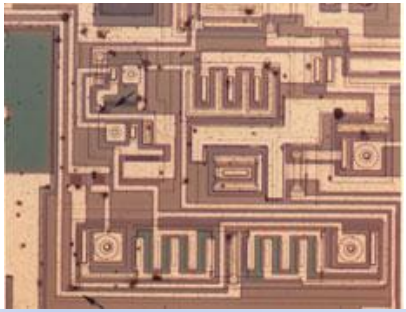

Applications of Transistors

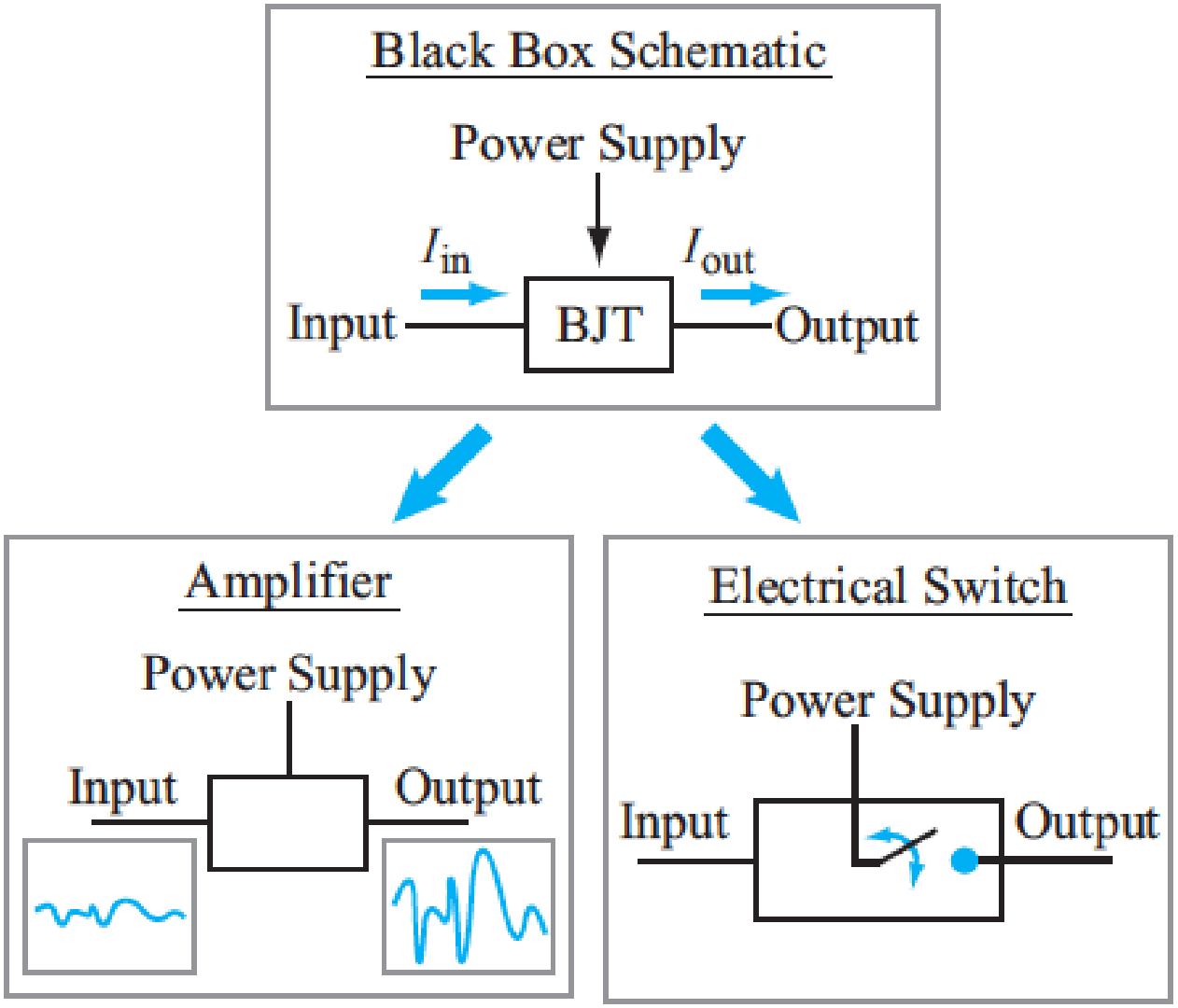

Terminals of a BJT

- Emitter, base and collector terminals
- Two types of BJTs: npn and pnp

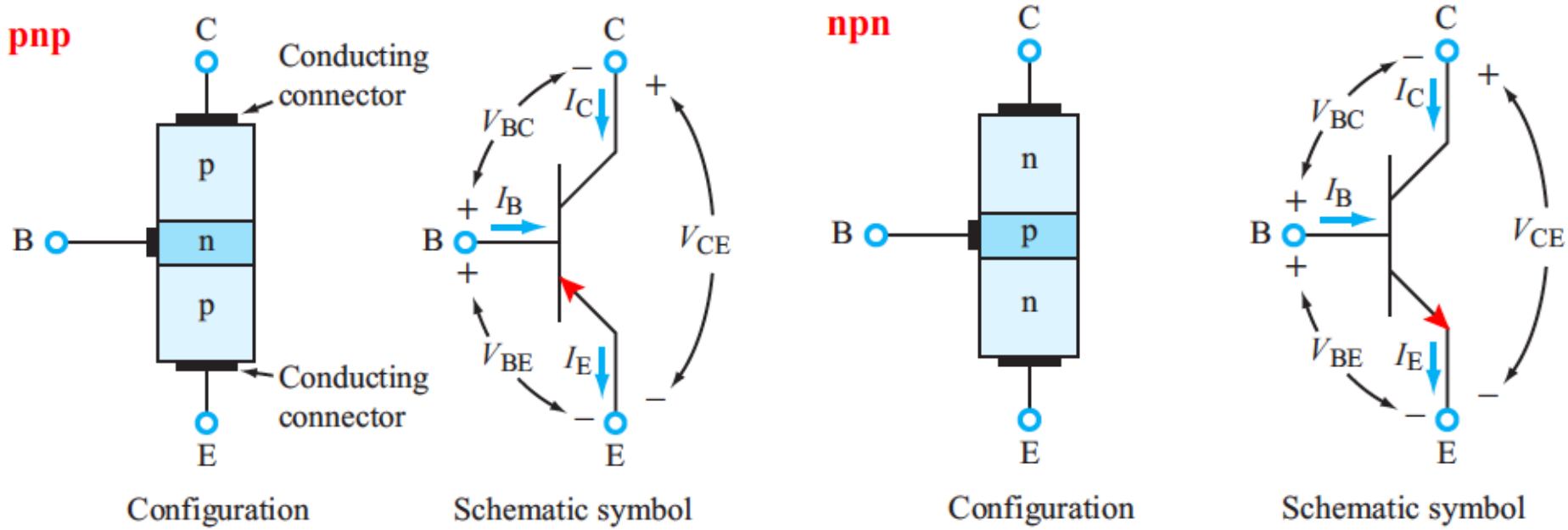

Bipolar Transistor Operation

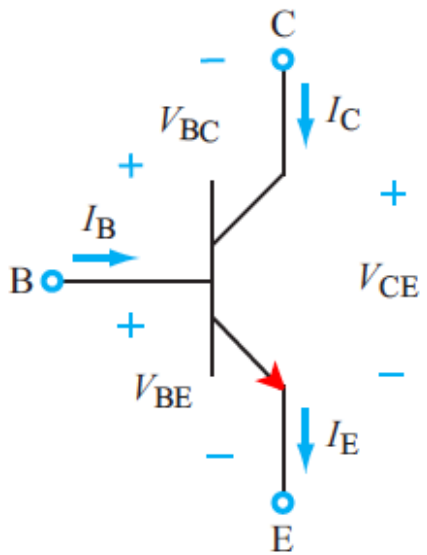

$$\beta = \frac{I_C}{I_B}$$

$$\alpha_{dc} \sim \frac{I_C}{I_E}$$

Base current controls collector current

Current gain parameter β

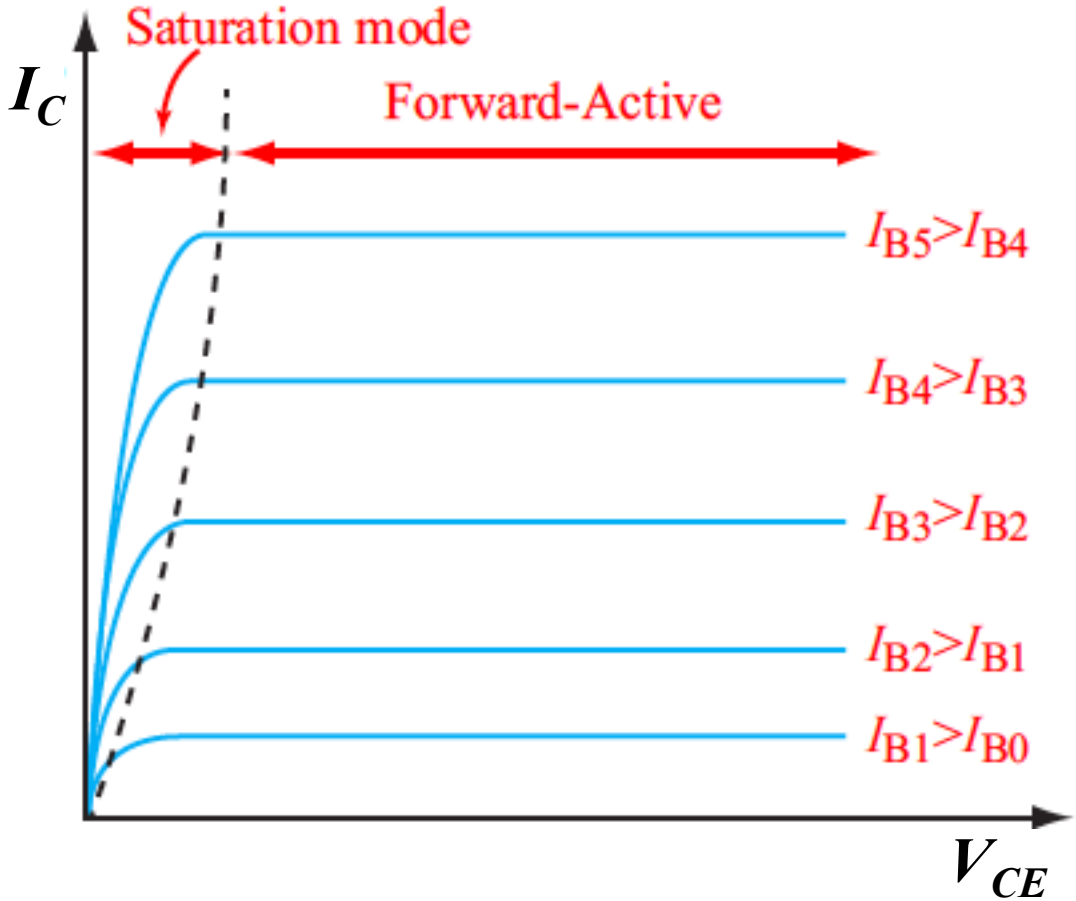

BJT Equivalent Circuit (Fwd Active)

Forward active operation: B-E forward, B-C reverse

Looks like a current amplifier with gain β (current controlled current source)

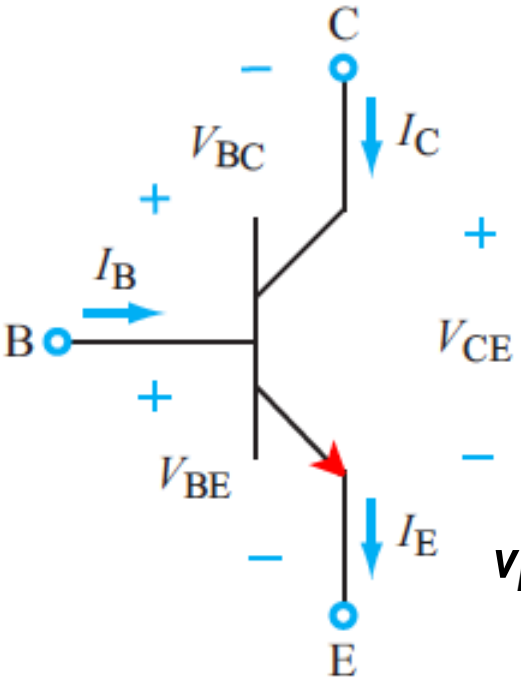

$$\beta = \frac{I_C}{I_B}$$

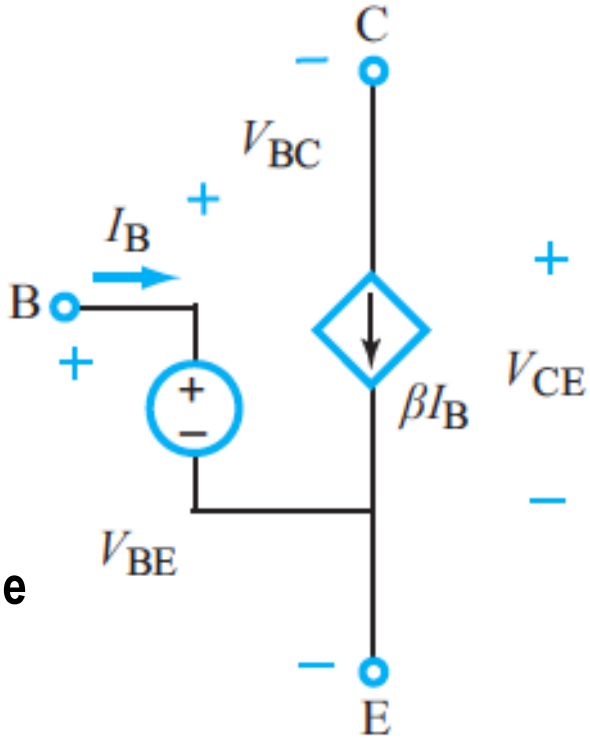

v_{BE} ~ 0.7V in forward active mode (you will learn why later!)

BJT Equivalent Circuit (Saturation)

Saturation operation: B-E forward, B-C forward

Constant voltage across B-E (V_{BE}^{on}), C-E (V_{sat})

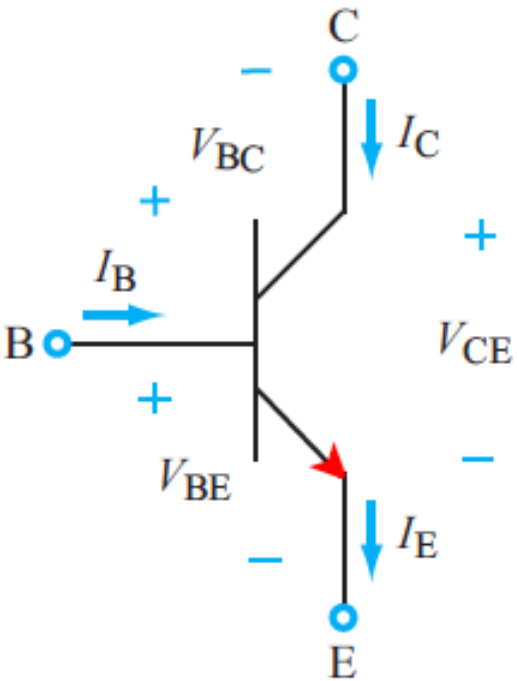

v_{BE}^{on} ~ 0.7V
v_{Bat} ~ 0.2V
(you will learn why later!)

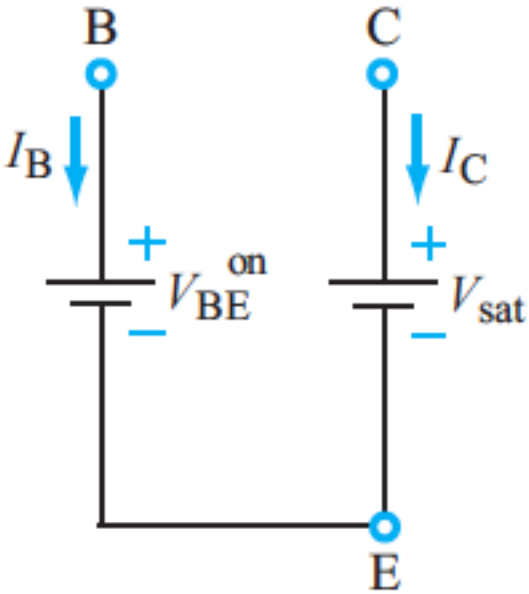

Bipolar Transistor Circuit Example

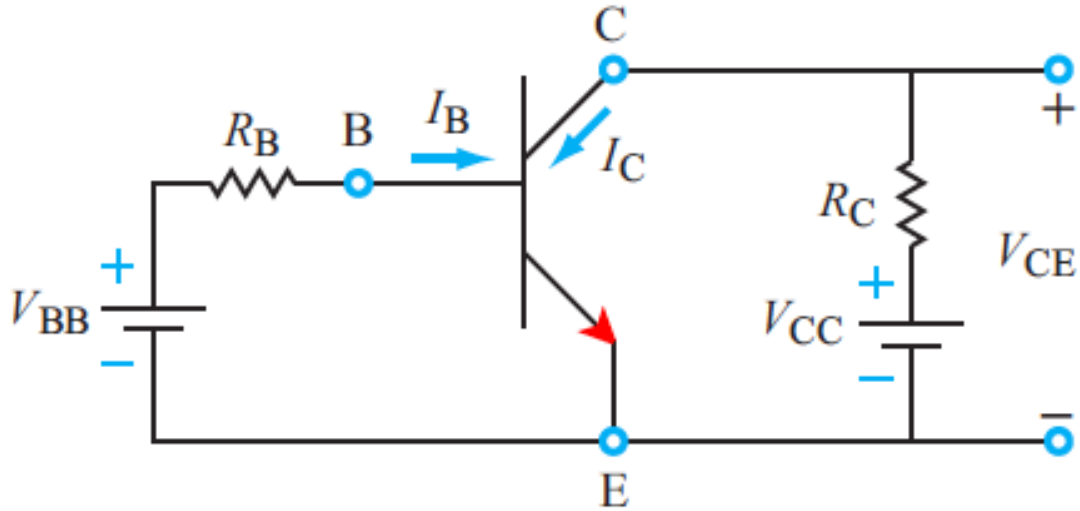

Eq. Circuit in Forward Active

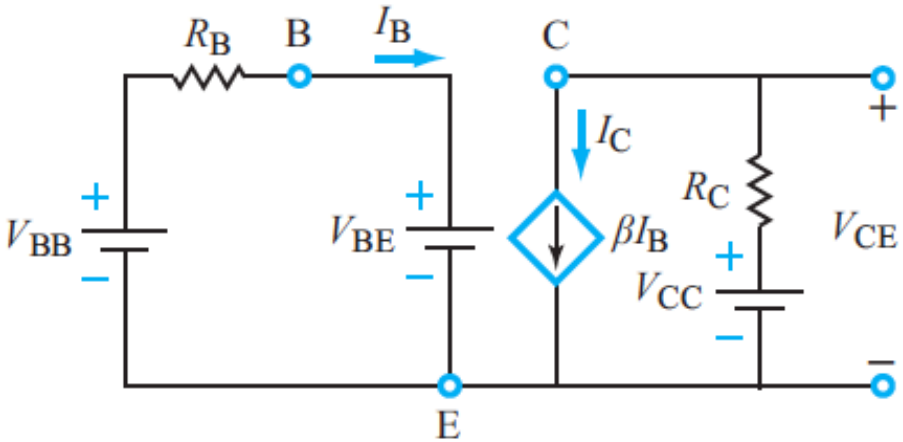

Eq. Circuit in Saturation

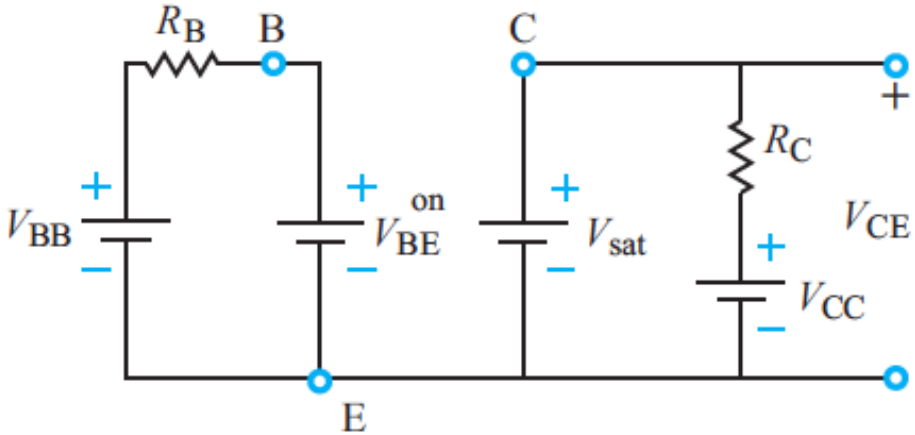

Transfer Characteristics

- Input/Output Relation
- How can this circuit be used as an:
  - Amplifier?
  - Switch?

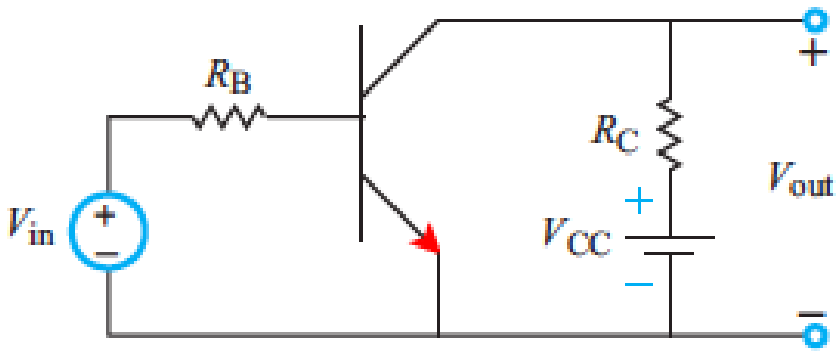

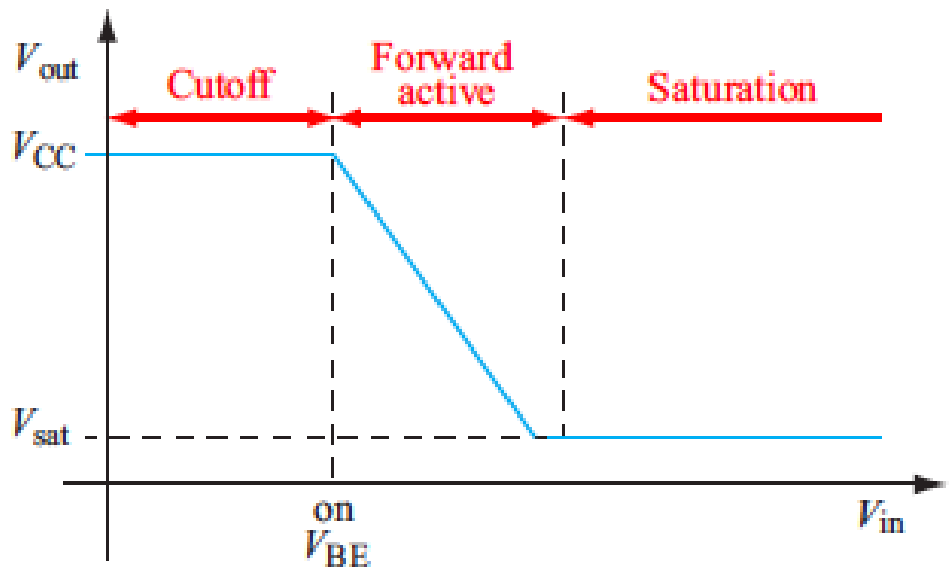

Bipolar Transistor

Goal: Control output with small input

Analogy: Bump controls water flow

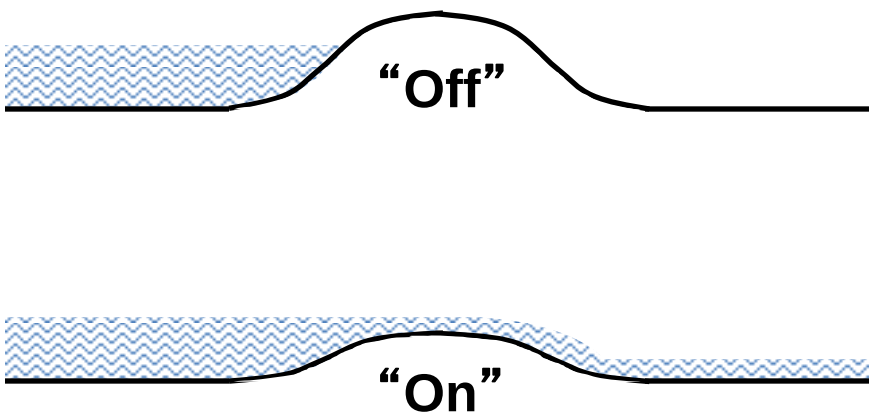

- Input controls bump height
- Output = water flow

Electronics analogy

- **Water flow = electron or hole current**
- **Bump = electronic potential**

Terminals Of A BJT

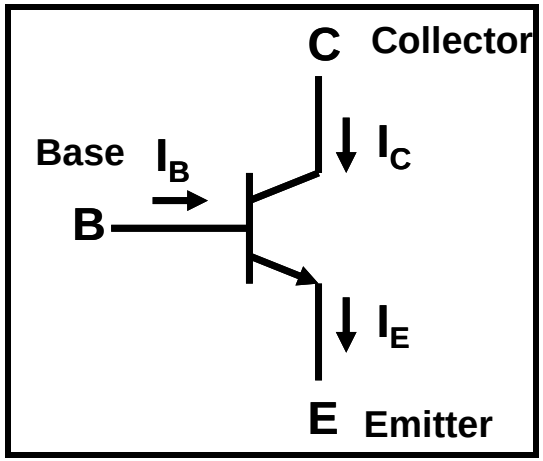

Base

Controls carrier flow from emitter to collector with voltage/current

Emitter

Injects carriers

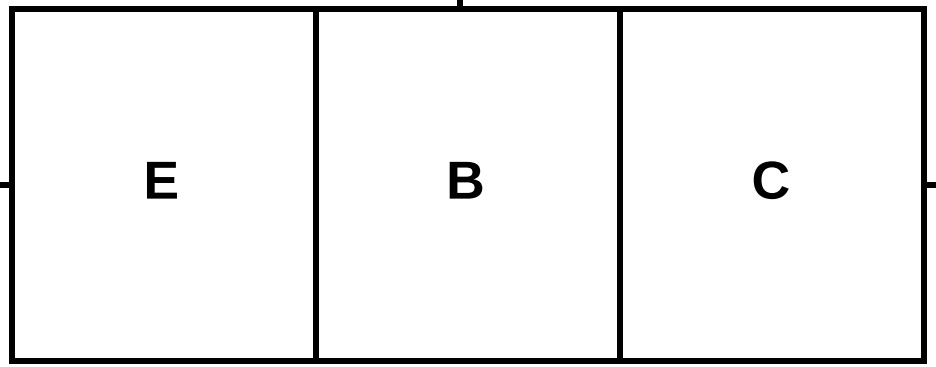

Collector

Collects carriers

Realize functionality with P-N junctions

NPN BJT

- **Two back to back p-n junctions (n-p-n)**
- **Base voltage/current control electron current**

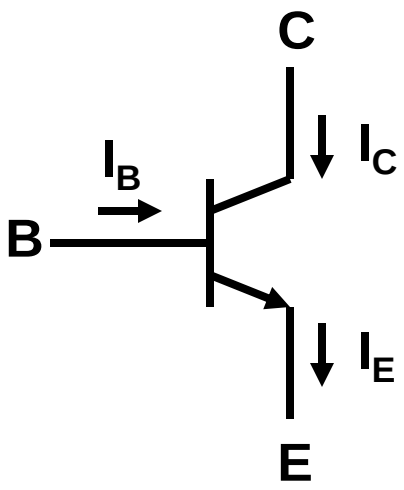

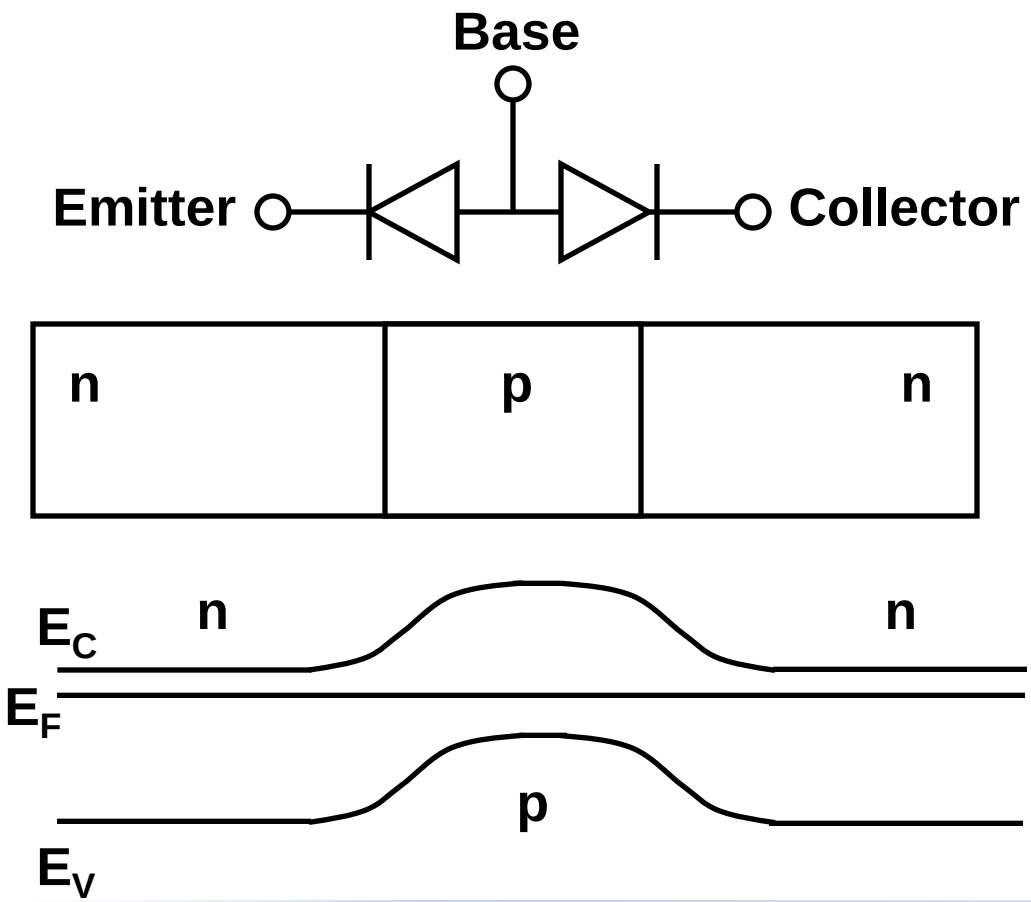

PNP BJT

- **Two face to face p-n junctions (p-n-p)**
- **Base voltage/current control hole current**

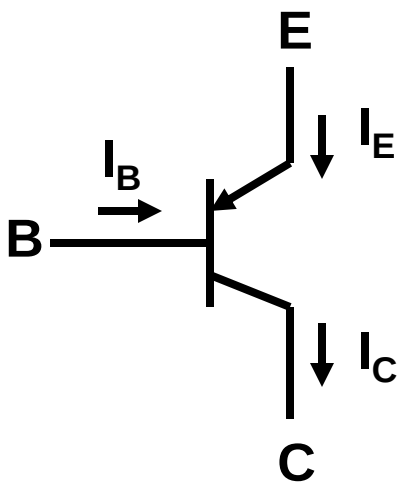

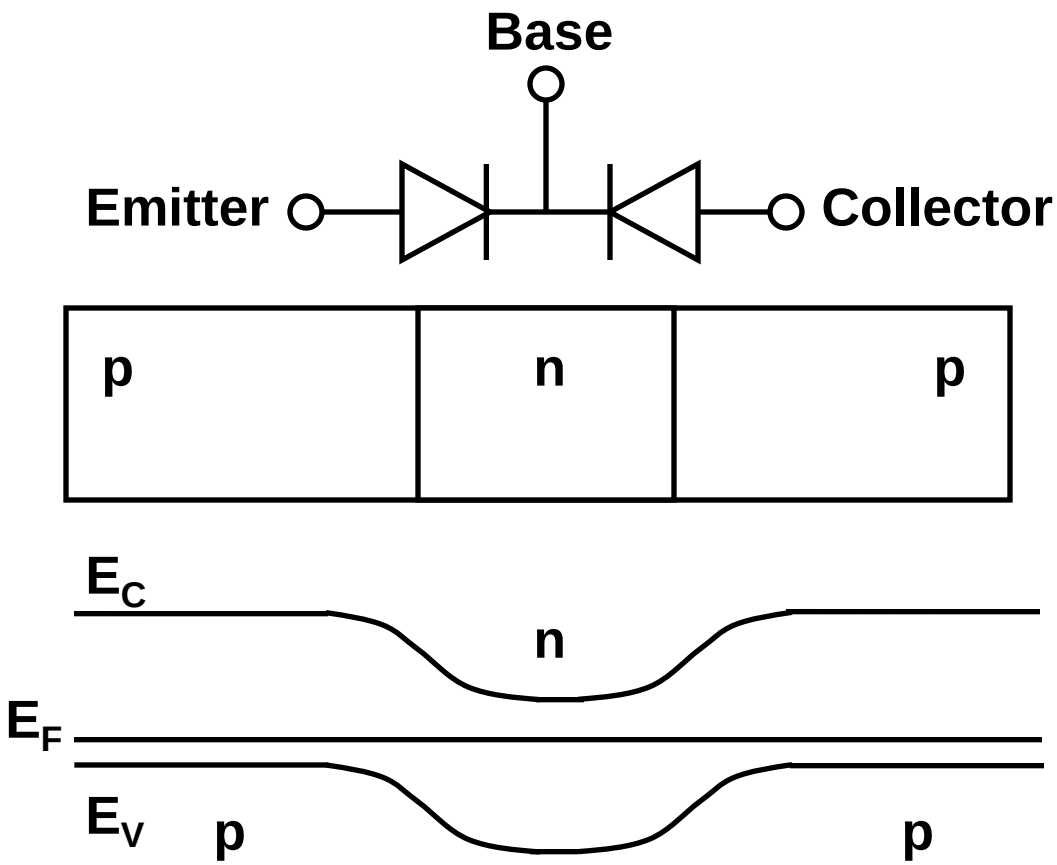

Conceptual Operation Of NPN BJT

- **Forward bias base-emitter junction**
- **Reverse bias base-collector junction**

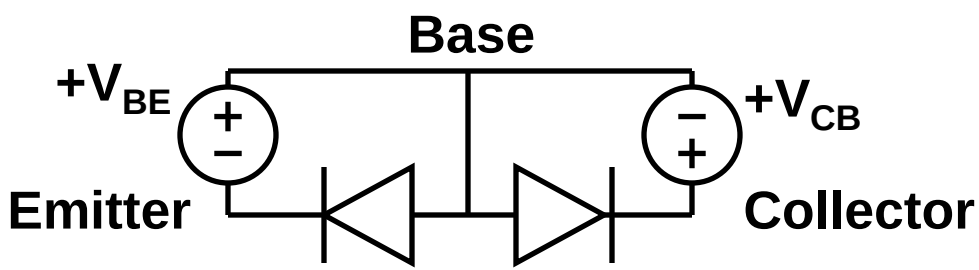

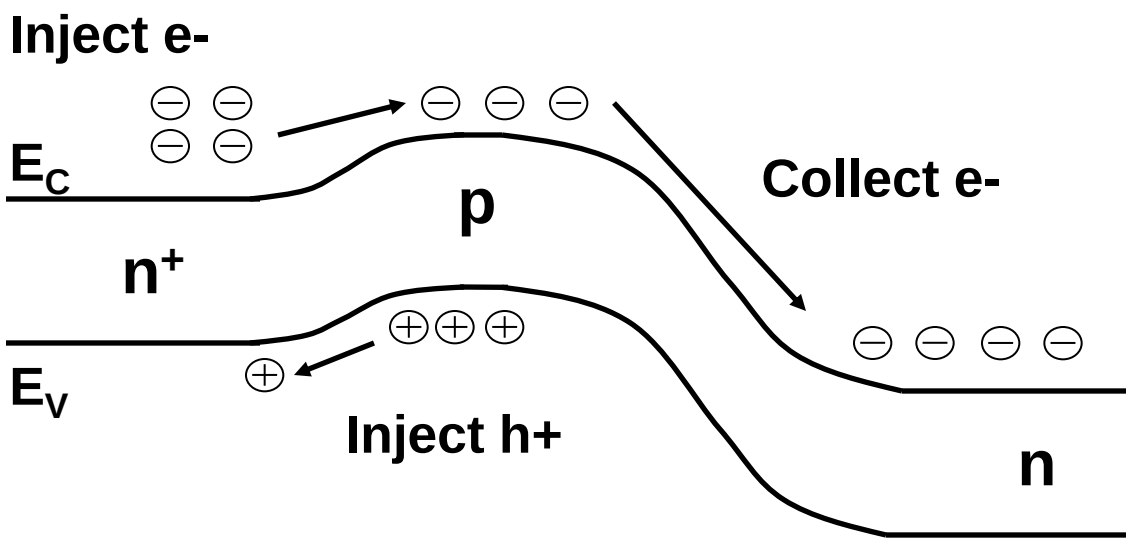

Bipolar Transistor Equivalent Circuit

For forward active operation

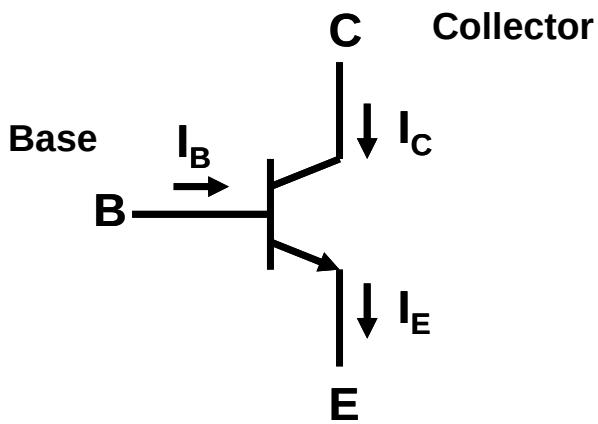

$$\beta = \frac{I_C}{I_B}$$

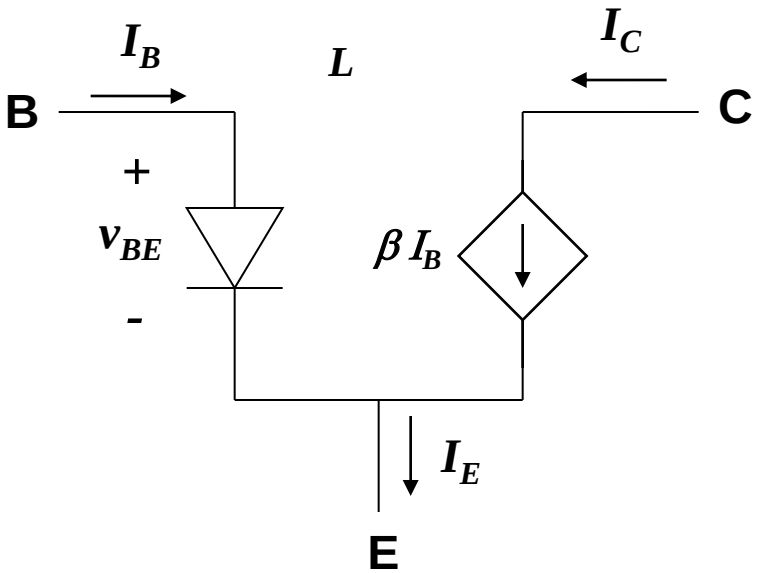

Looks like a current amplifier with gain β

Conceptual Operation Of PNP BJT

- **Forward bias emitter-base junction**
- **Reverse bias collector-base junction**

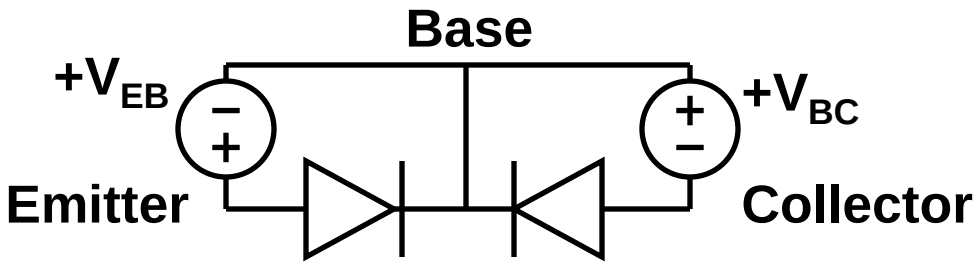

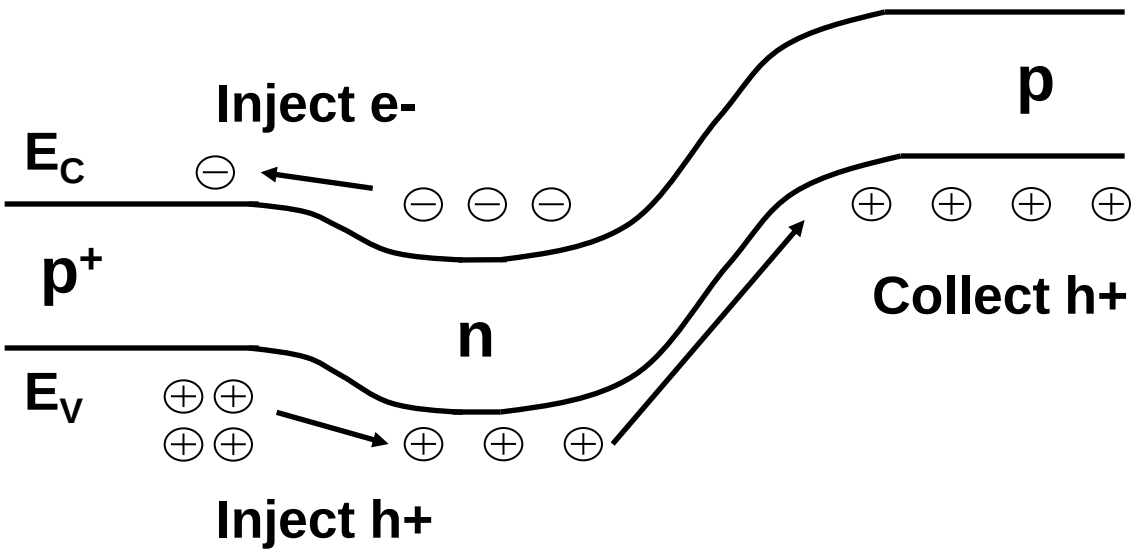

Conceptual Operation Of BJT

What is the difference between a BJT and two back to back diodes?

BJT Regions Of Operation (npn)

Four regions of operation corresponding to forward/reverse bias of base-emitter and base-collector p-n junctions

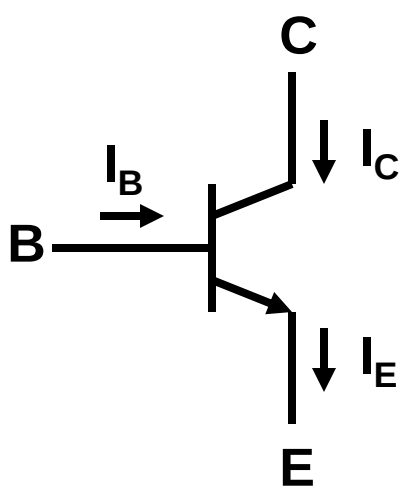

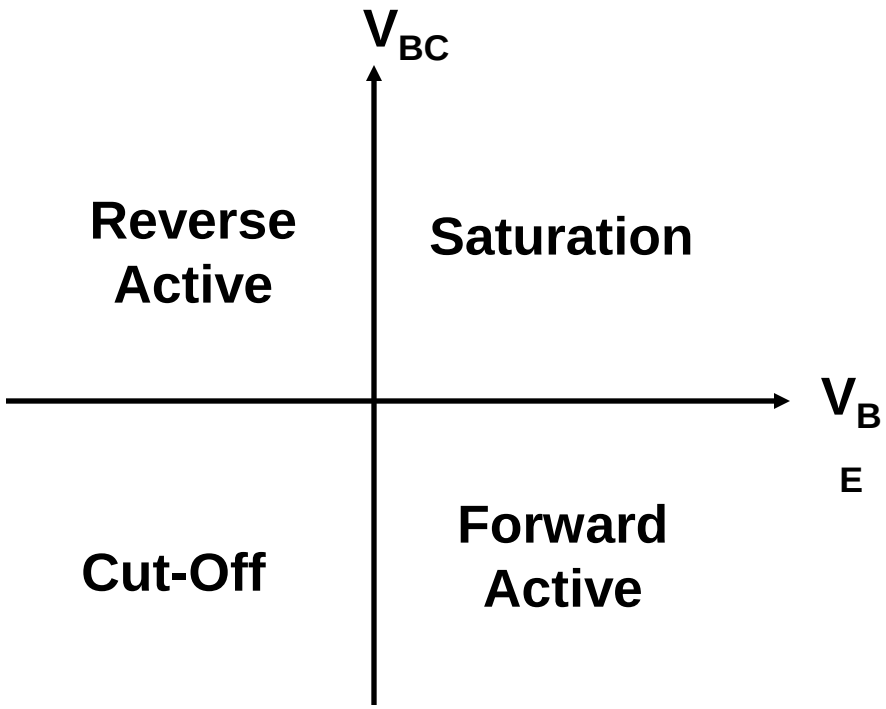

How does this figure change for pnp?

BJT Circuit Configurations

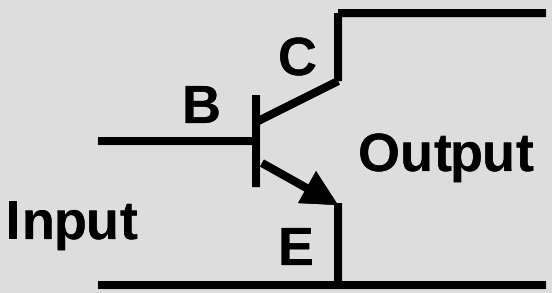

Common Emitter

High voltage and current gain
Medium input and output impedance

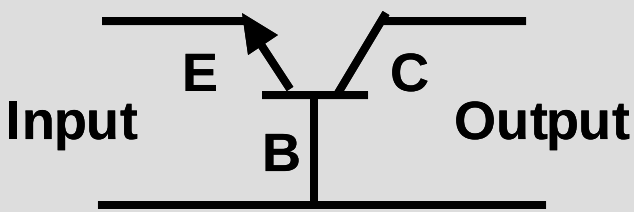

Common Base

High voltage gain, current gain ≤1
Low input and high output impedance

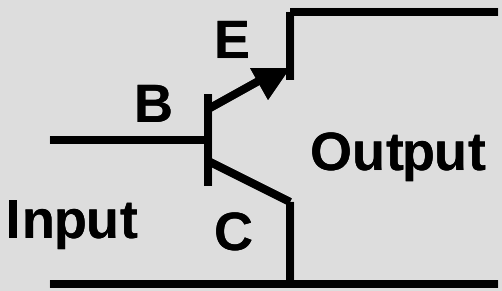

Common Collector

(Emitter follower)
Voltage gain ~1, high current gain
High input and low output impedance

Emitter Injection Efficiency

What fraction of the emitter current is due to the intended carrier injection?

$$\gamma_e = \frac{I_{En}}{I_{En} + I_{Ep}}$$

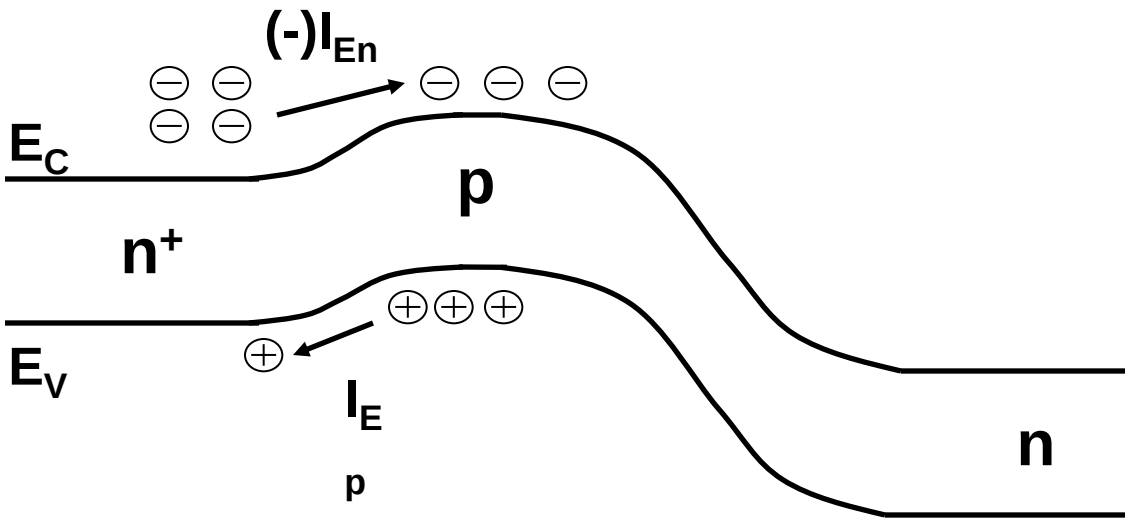

Determined by doping levels and diffusion process

Base Transport Factor

What fraction of the injected electron shows up as collector current?

$$\alpha_T = \frac{I_{Cn}}{I_{En}}$$

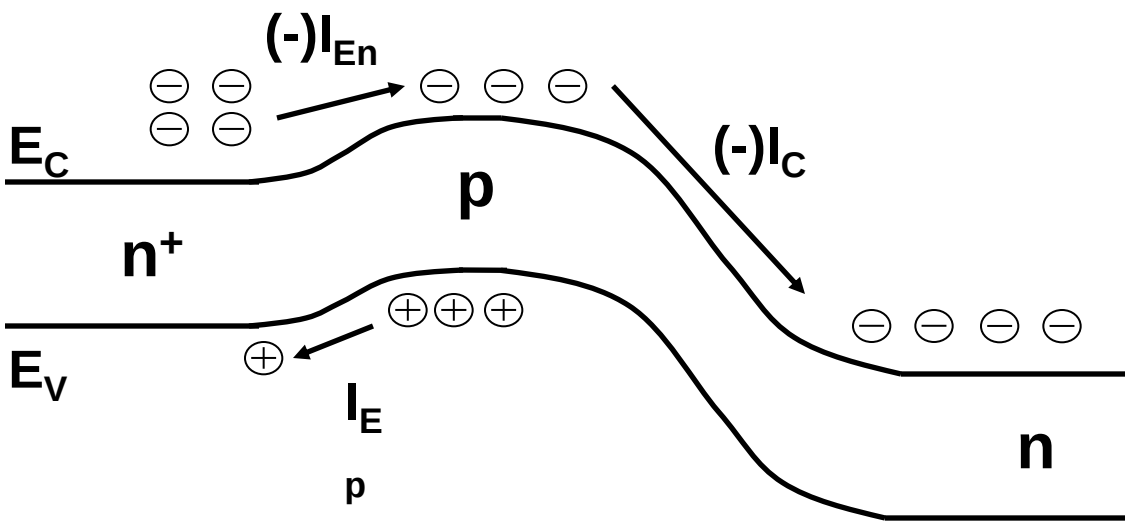

Determined by base width and carrier diffusion length in base

Common Base DC Current Gain

How much of the emitter current shows up at the collector?

$$\alpha_{dc} = \gamma \alpha_T = \frac{I_{Cn}}{I_E}$$

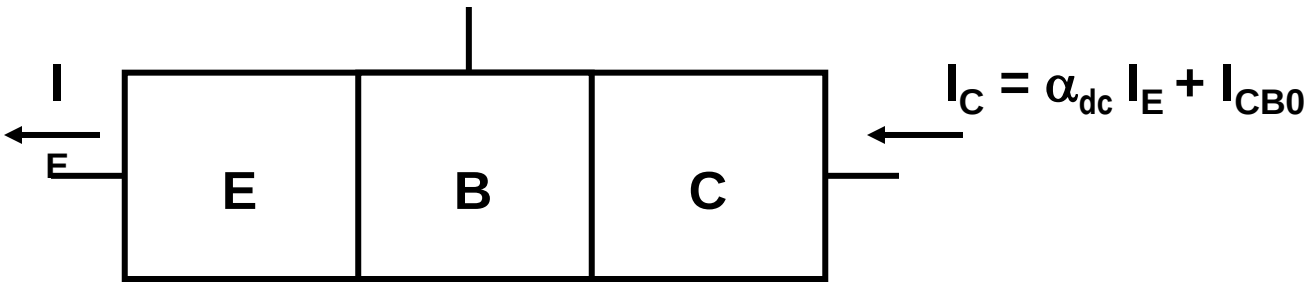

Depends on emitter injection efficiency and base transport factor

Common Emitter DC Current Gain

What is the output current (collector) relative to the input (base) current

$$\beta = \frac{I_C}{I_B} = \frac{\alpha_{dc}}{1-\alpha_{dc}}$$

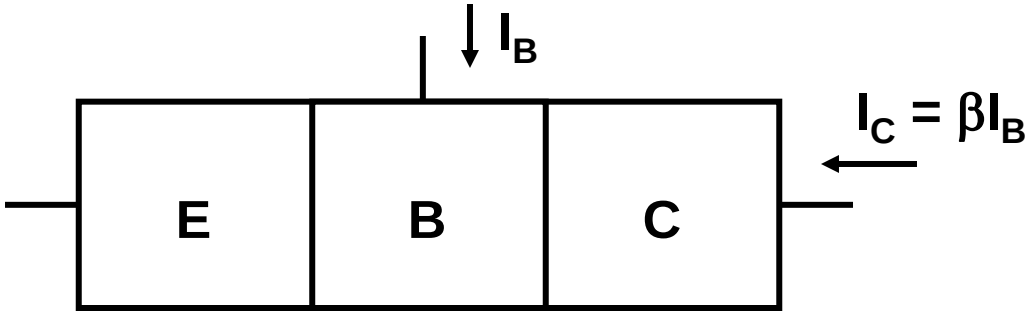

Depends on emitter injection efficiency and base transport factor

PNP BJT

How do the figures of merit differ for the PNP BJT?