Introduction to FETs

EECS 320

Introduction to Semiconductor Devices

Transistor

tran•sis•tor (trán-zìs’ ter)

A solid-state electronic device that is used to control the flow of electricity in electronic equipment and consists of a small block of a semiconductor with at least three electrodes

Trans(fer) + (res)istor

Idea: control large output with small input

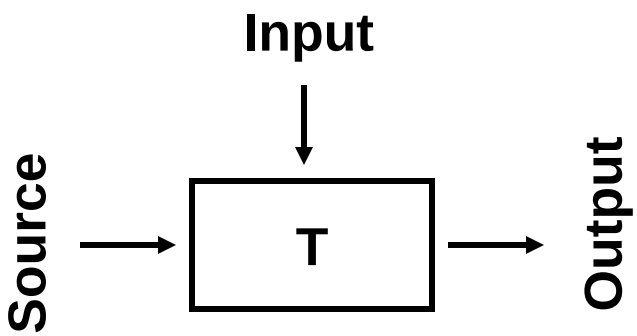

This device should exhibit *gain*

Transistor Types

In general, there are two types of transistors

Bipolar (BJT)

A three terminal device in which emitter to collector current is controlled by base current

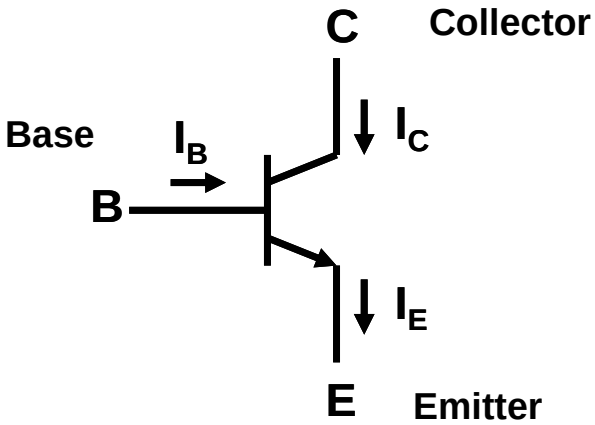

Field-effect (FET)

A transistor in which the output current is controlled by a variable electric field (gate voltage)

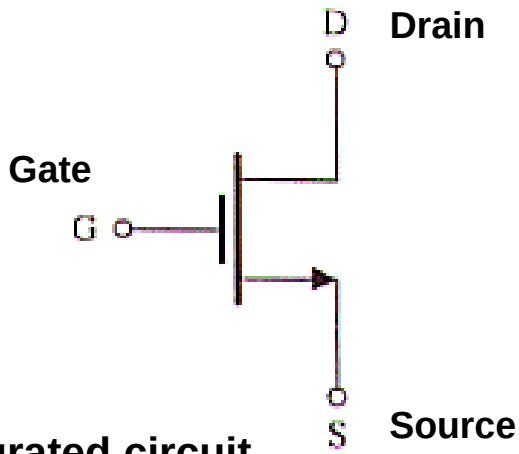

Single device

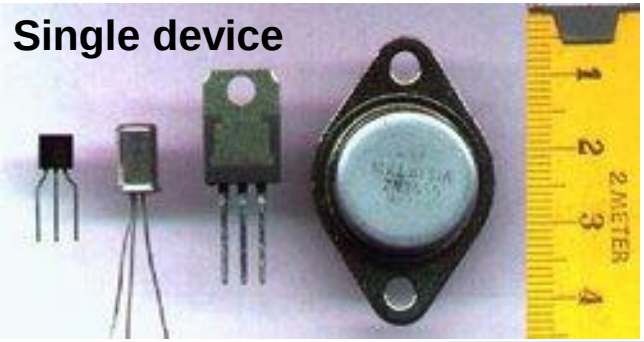

Integrated circuit

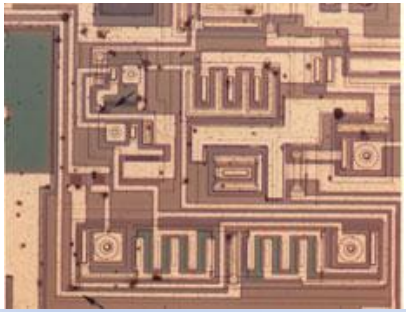

Applications of Transistors

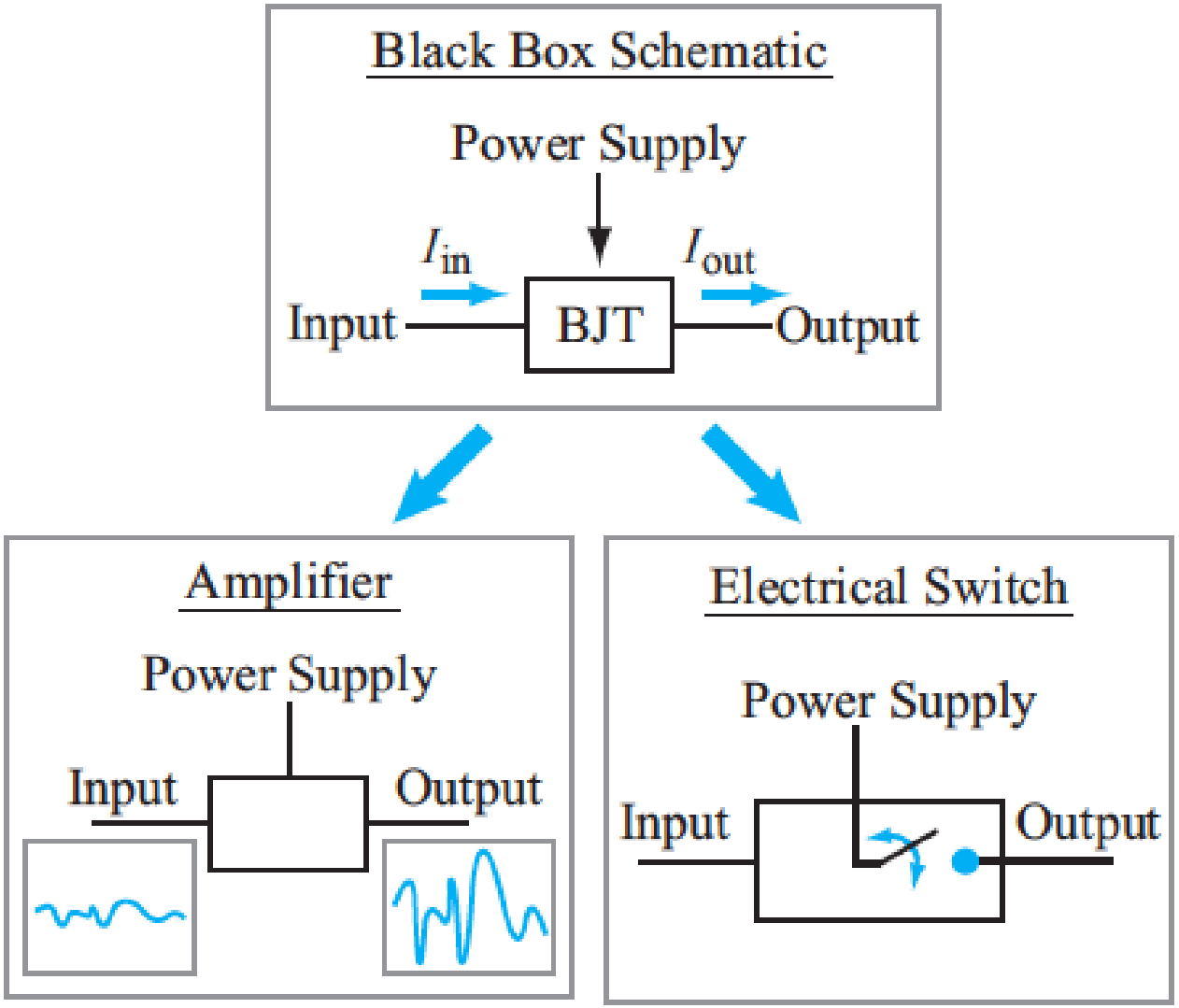

MOS Field Effect Transistor

- Gate, Source, and Drain terminals
- Two types of MOSFETs: NMOS and PMOS

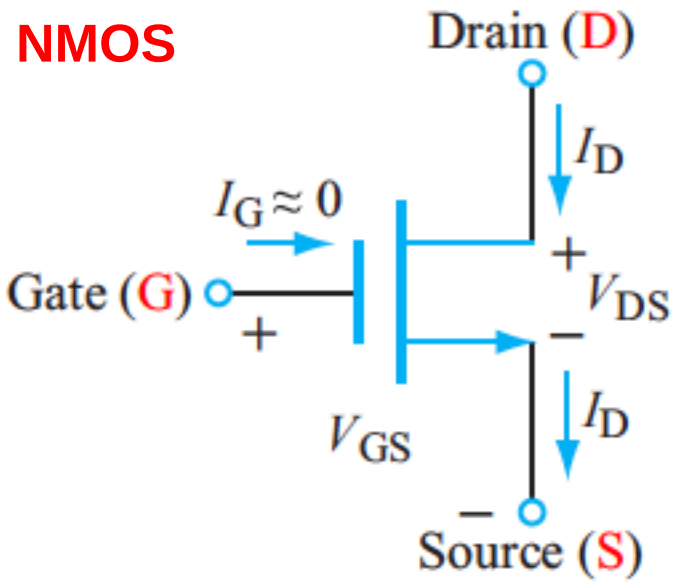

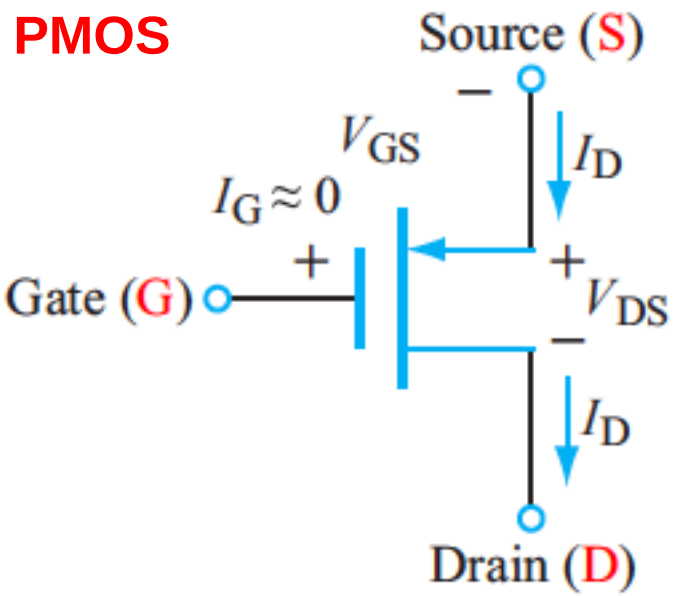

MOSFET Operation

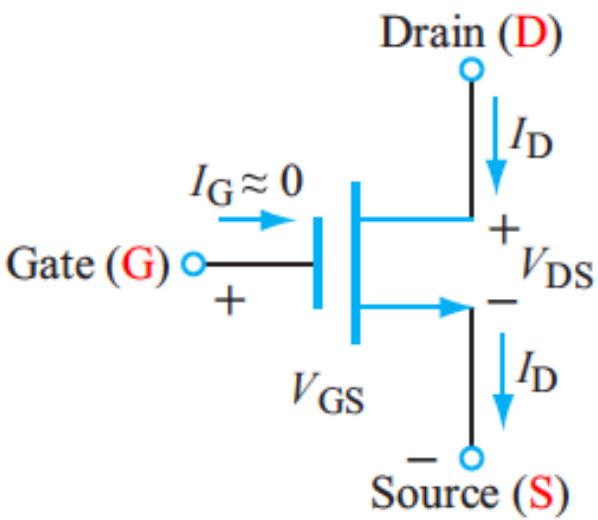

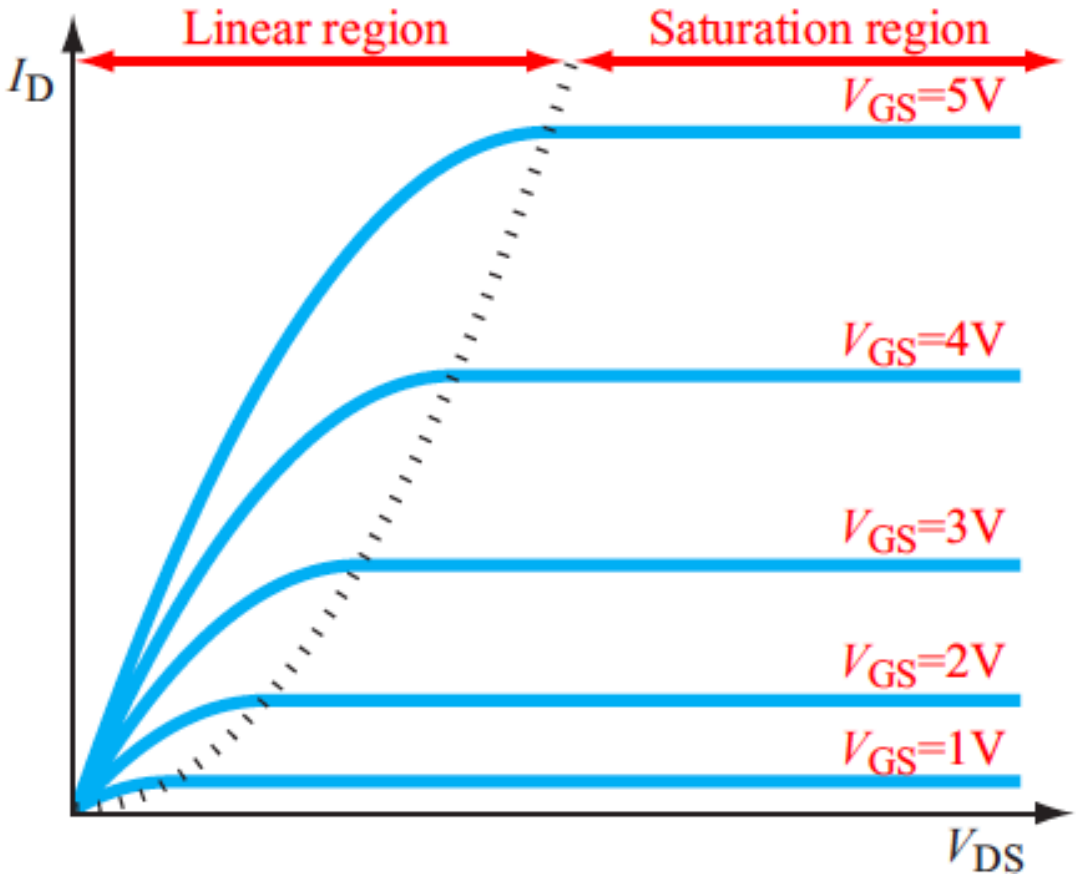

Gate voltage controls I_D

There is no current at the gate

Equivalent Circuit Model for MOSFET

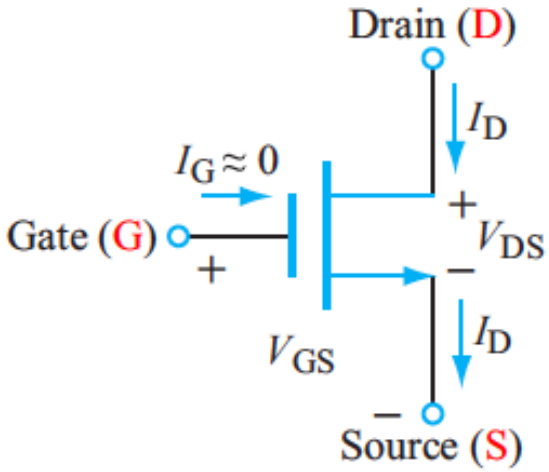

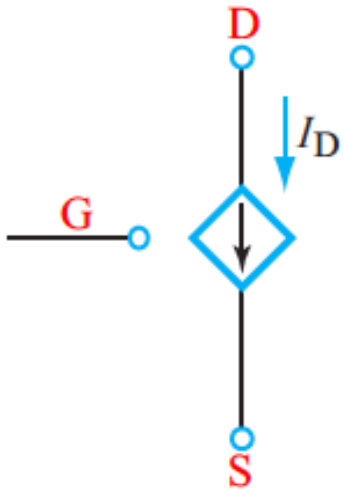

	NMOS
Cutoff	$V_{GS} < V_{TH}$
Linear	$V_{GS} > V_{TH}$ $V_{DS} \leq V_{GS} - V_{TH}$ $I_D = K\left[2\left(V_{GS} - V_{TH}\right)V_{DS} - V_{DS}^2\right]$
Saturation	$V_{GS} > V_{TH}$ $V_{DS} \geq V_{GS} - V_{TH}$ $I_D = K\left(V_{GS} - V_{TH}\right)^2$
V_{DS} and V_{GS}	Typically positive

- (nonlinear) Voltage controlled current source
- Turns ON above "threshold" V_{TH}
- Two ON conditions, linear and saturation

MOSFET With Resistive Load

- Transfer characteristics similar to the BJT circuit we examined
- How can the circuit be used as an:
  - Amplifer?
  - Switch?

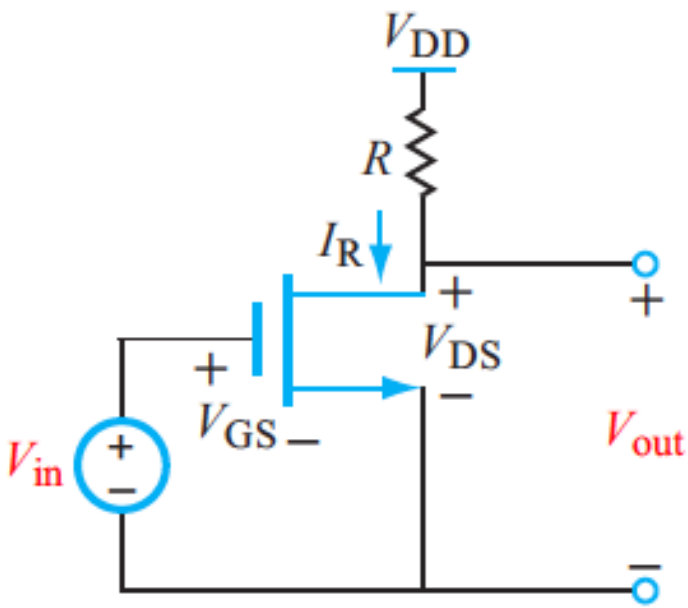

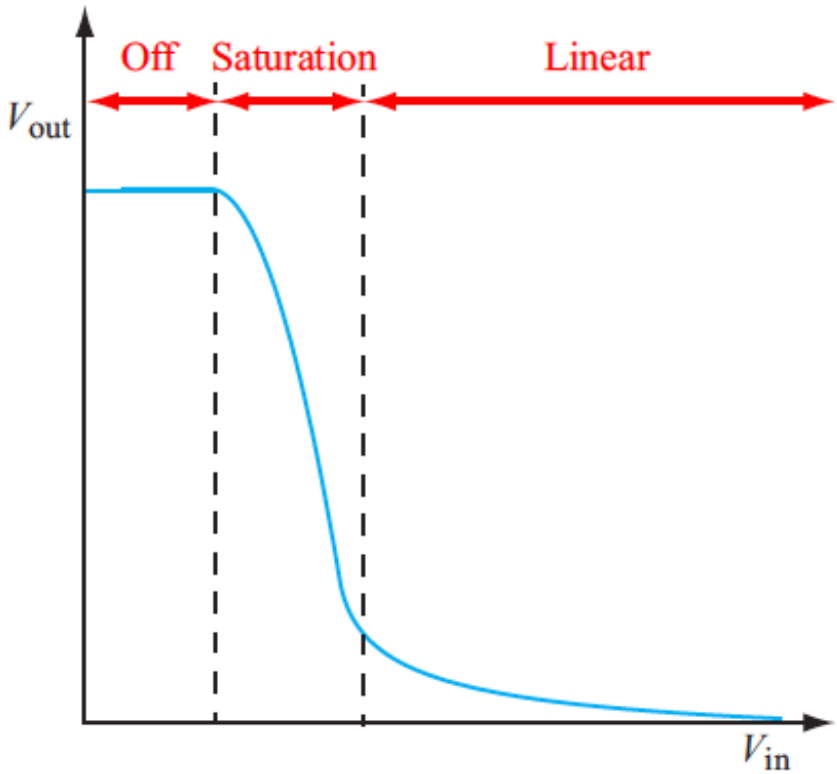

MOSFET Circuit Example

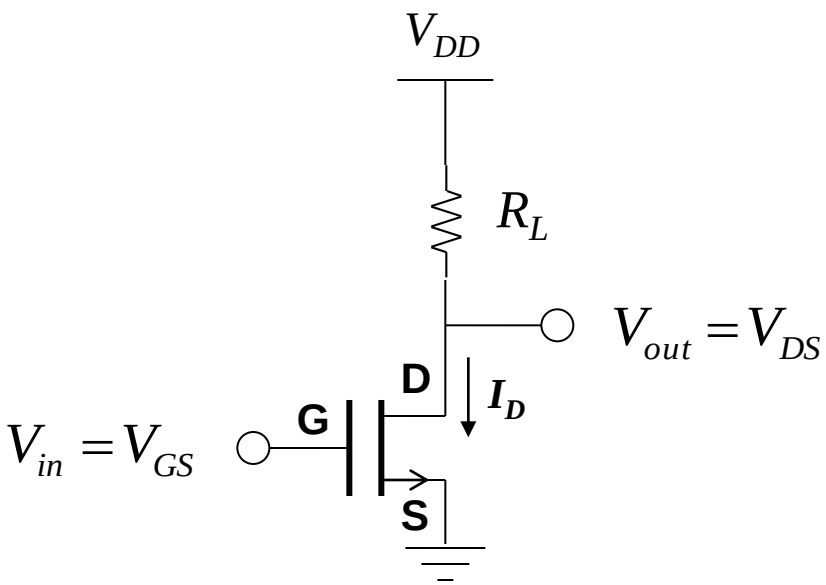

Equate I_D and I_R to determine V_{out}

Device in Linear

$$I_D = k\left(V_{in} - V_T - \frac{V_{out}}{2}\right)V_{out} = \frac{(V_{DD} - V_{out})}{R_L}$$

Resulting in quadratic equation for V_{out}

$$V_{out}^2 + \left(2V_T - 2V_{in} - \frac{2}{kR_L}\right)V_{out} + \frac{2V_{DD}}{kR_L} = 0$$

Device in Saturation

$$I_D = \frac{k}{2}(V_{in} - V_T)^2 = \frac{(V_{DD} - V_{out})}{R_L}$$

$$V_{out} = V_{DD} - \frac{kR_L}{2}(V_{in} - V_T)^2$$

Load Line

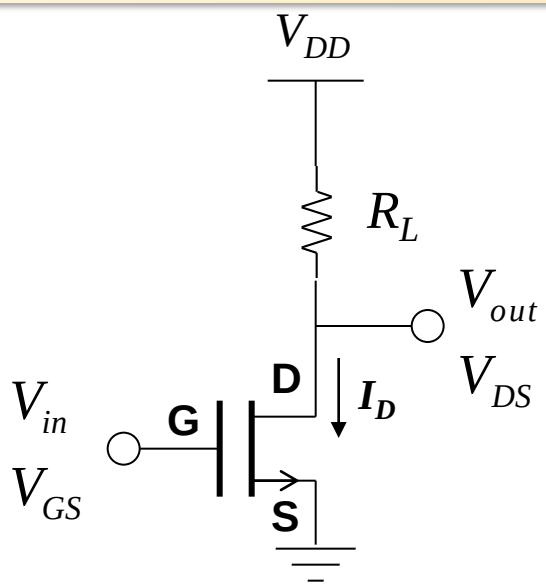

You can use a "load line" to graphically determine $V_{out}=V_{DS}$ for a given $V_{in}=V_{GS}$

Linear circuit

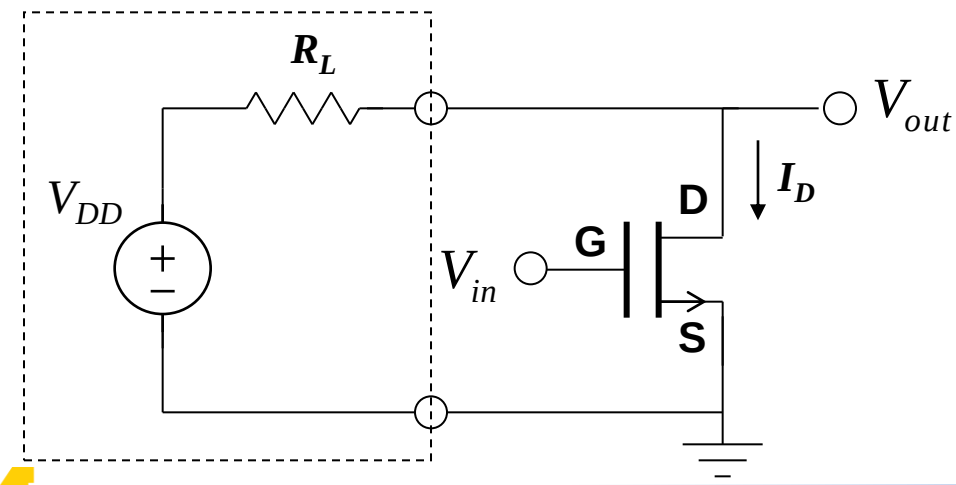

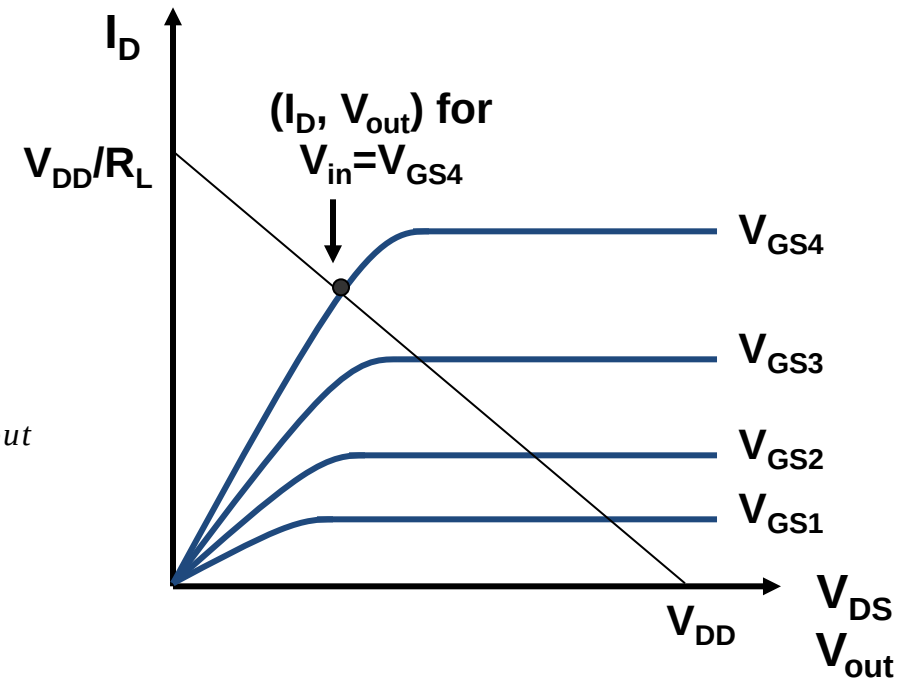

When is the FET in Off/Linear/Saturation?

Examine the transition points

Off ↔ On

$$V_{GS} = V_T$$
$$V_{in} = V_T$$

Off	**On**
$V_{in} < V_T$	$V_{in} > V_T$

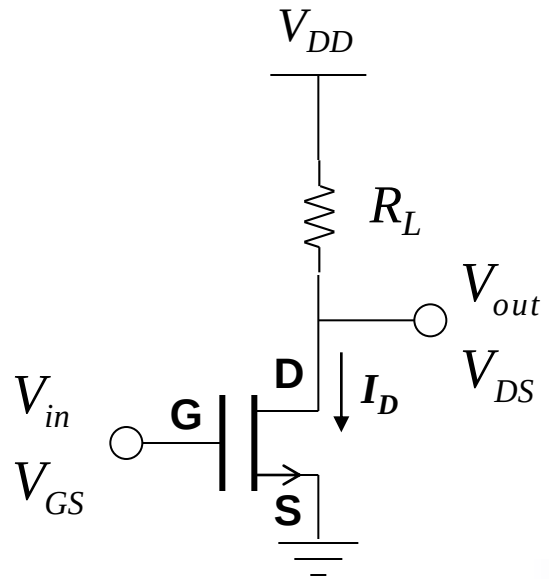

Linear ↔ Saturation

$$V_{DS} = V_{GS} - V_T$$
$$V_{out} = V_{in} - V_T$$

$$V_{out} = V_{DD} - \frac{kR_L}{2}\left(V_{in} - V_T\right)^2 = V_{in} - V_T$$

$$V_{in}^{\ 2} + V_{in}\left(\frac{2}{kR_L} - 2V_T\right) + \left[V_T^2 - \frac{2}{kR_L}\left(V_{DD} + V_T\right)\right] = 0$$

Solve quadratic equation for V_{in}, call "V_{in}^{sat}"

Linear	**Saturation**
$V_{in} > V_{in}^{\ sat}$	$V_T < V_{in} < V_{in}^{\ sat}$

Input/Output Characteristics

How do V_{out} and V_{in} relate?

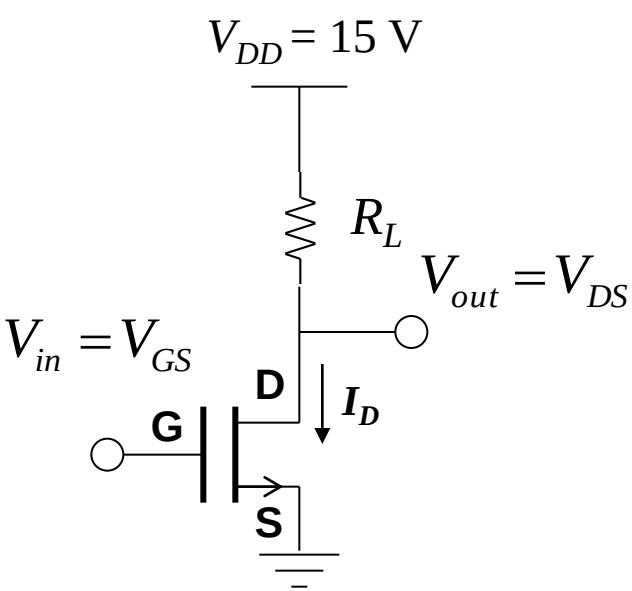

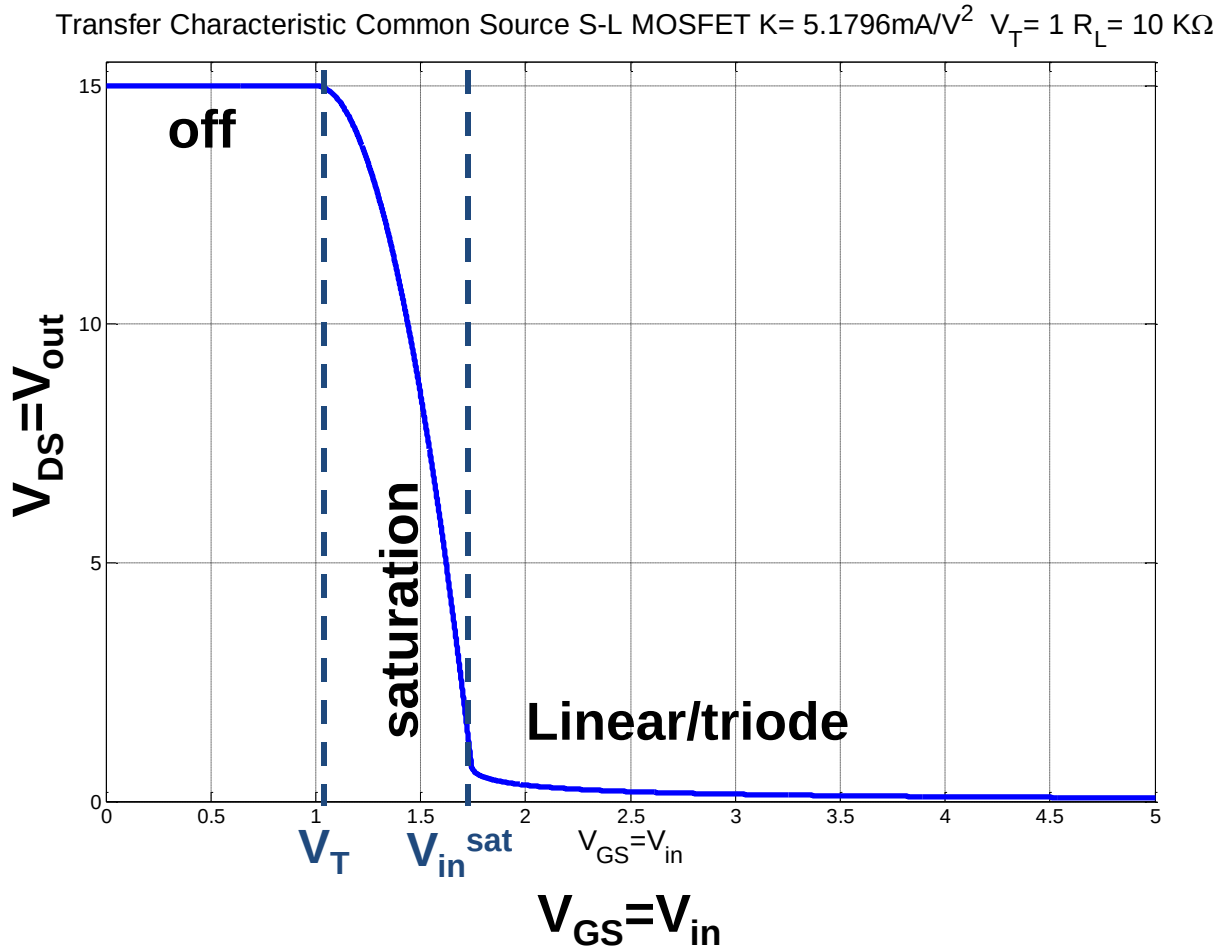

Digital Circuit: MOSFET Inverter

In digital circuits, represent binary "1" and "0" by "high" and "low" voltages

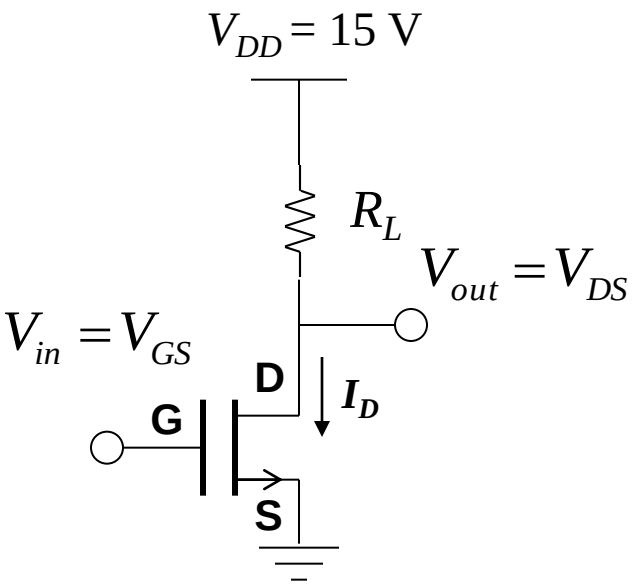

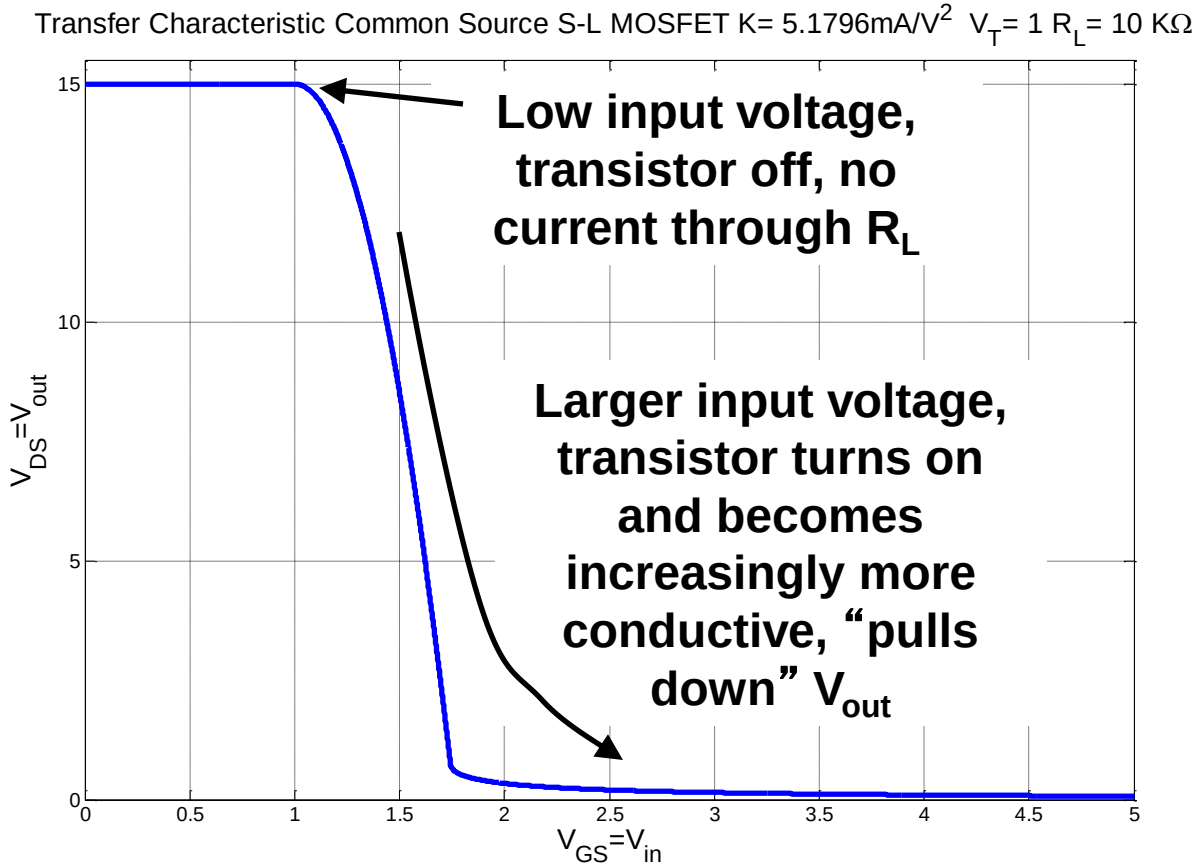

Digital Circuit: MOSFET Inverter

In digital circuits, represent binary "1" and "0" by "high" and "low" voltages

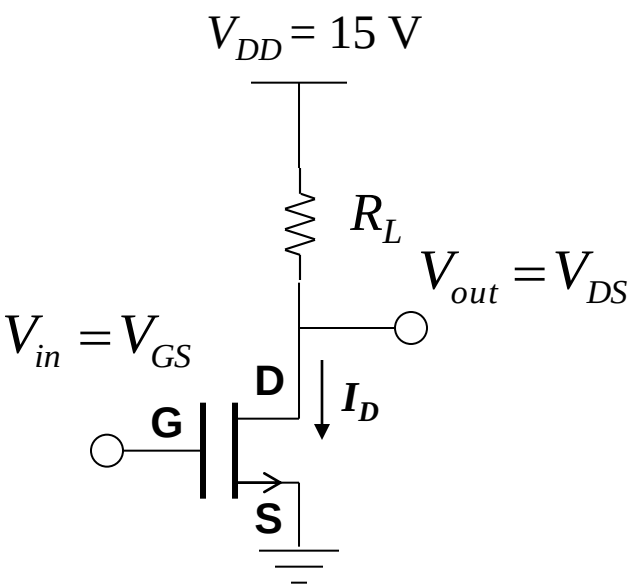

In	Out
0	1
1	0

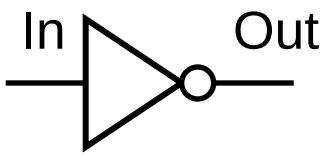

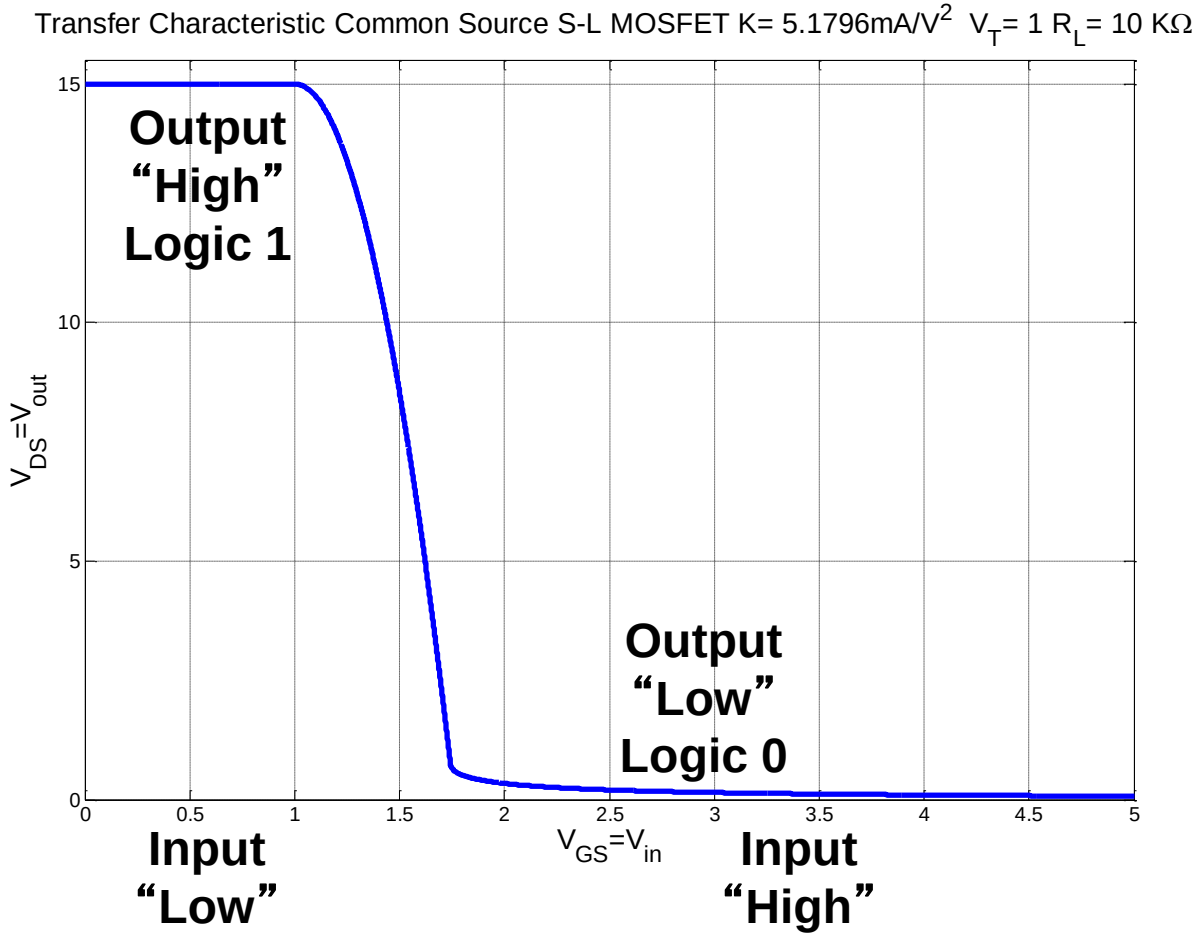

FET Amplifer Circuit

Input DC bias point, AC input signal

Output will be DC bias point, AC output signal

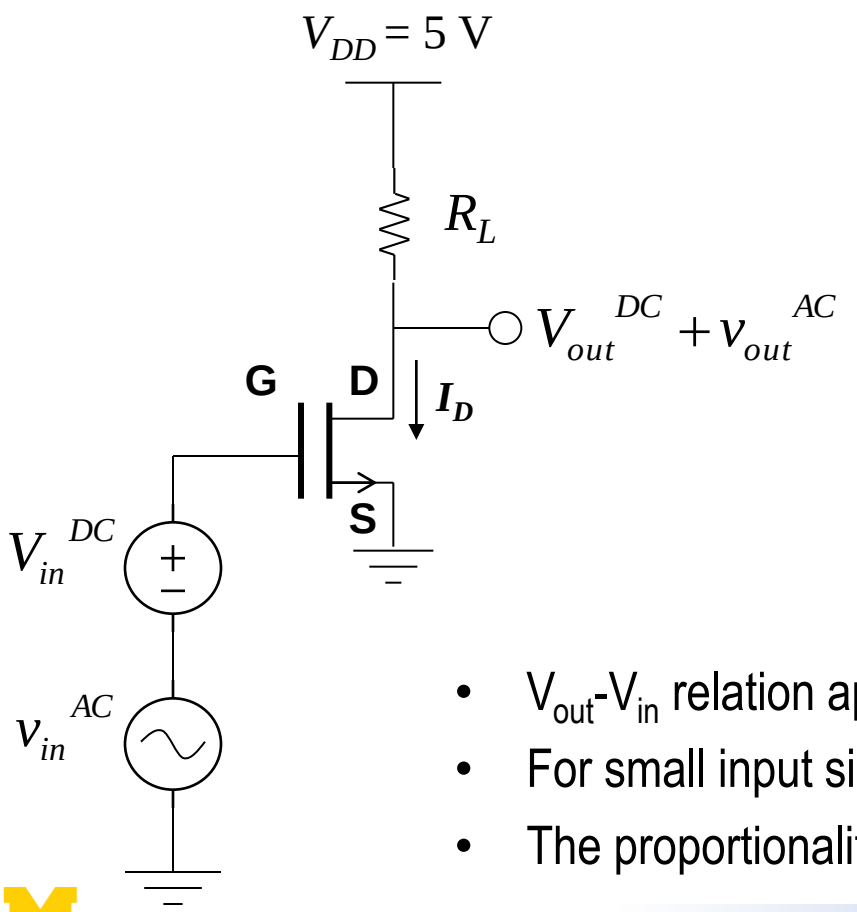

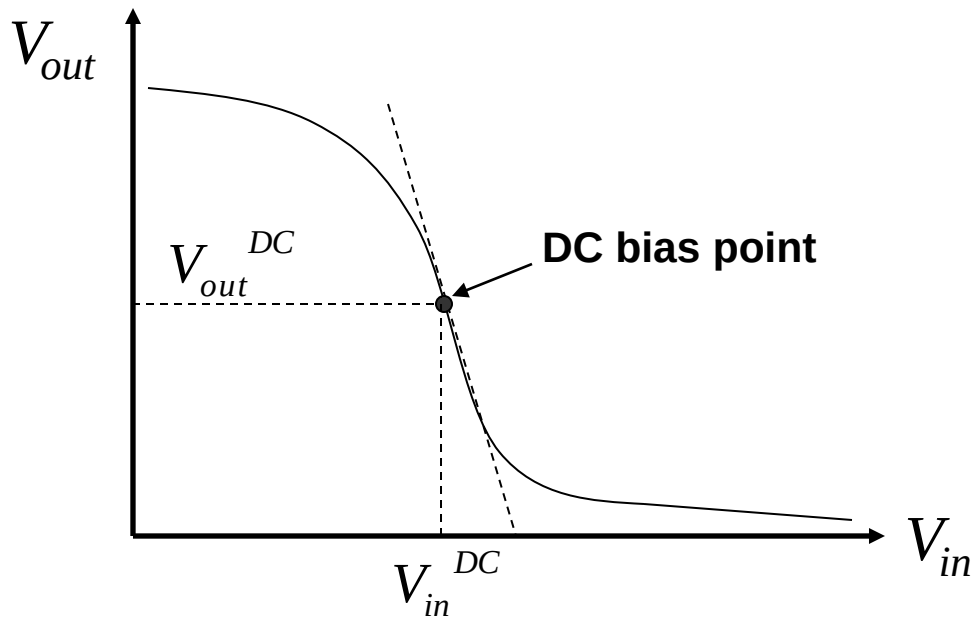

- V_{out}-V_{in} relation approximately linear near bias point
- For small input signal, linear relation $v_{out}^{AC}=Av_{in}^{AC}$
- The proportionality constant "A" can be >1, Gain!

Transistor

Goal: Control output with small input

Analogy: Valve controls water flow

Valve Controls Flow

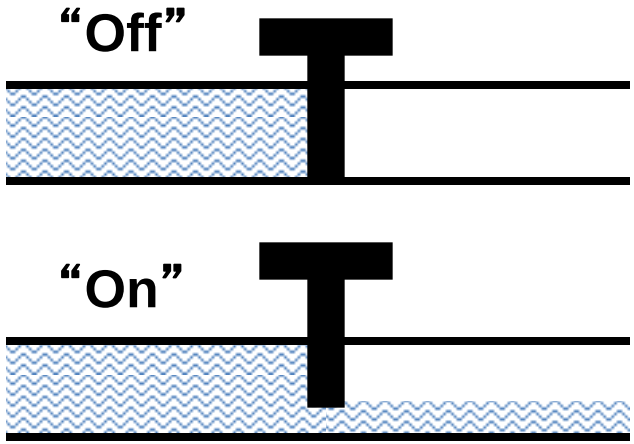

- Input controls aperature
- Output = water flow

Electronics analogy

- **Water flow = electron or hole current**
- **Valve = channel conductance controlled by electric field**

Field Effect Transistor Terminals

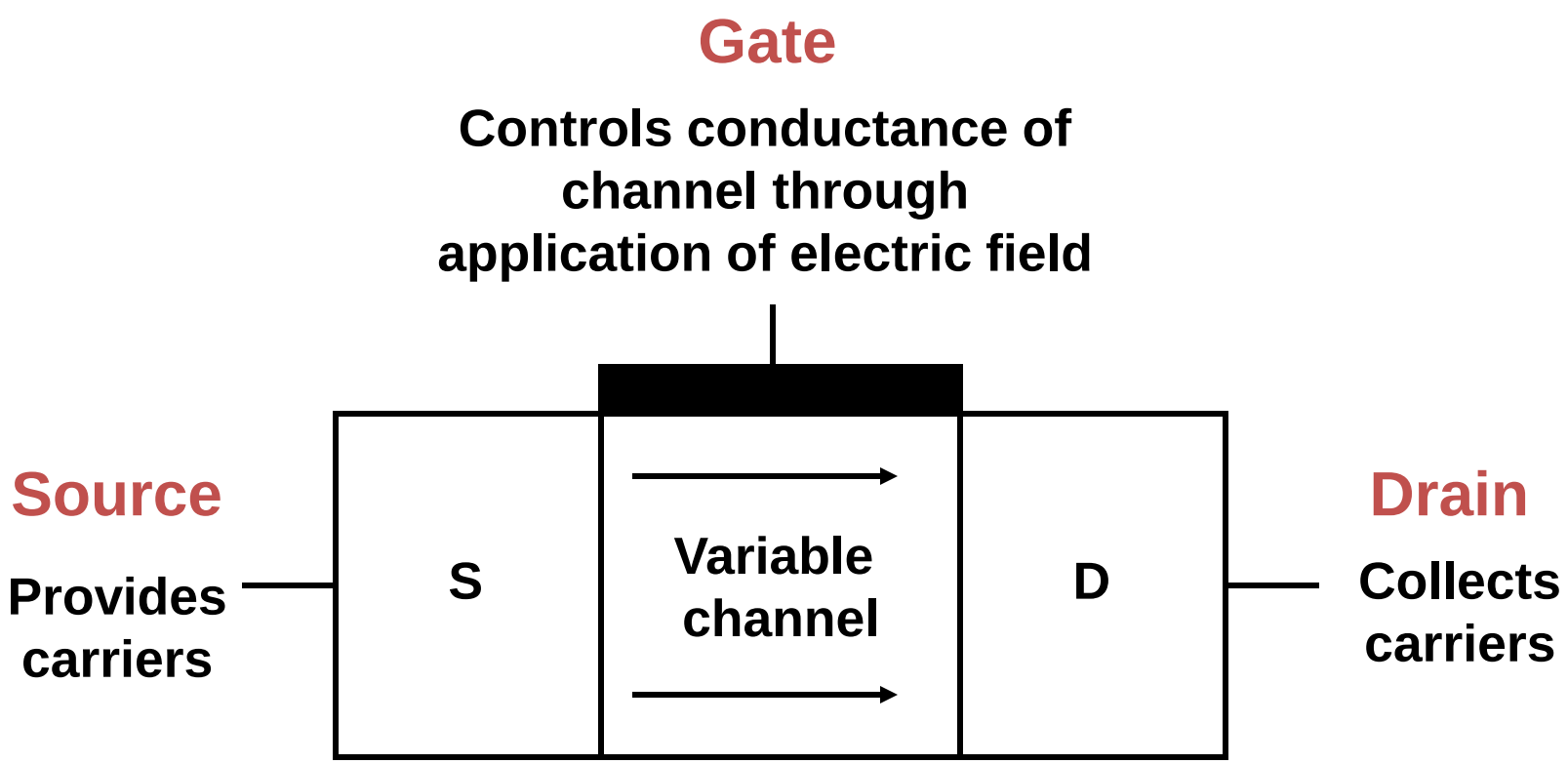

Control source to drain current with gate voltage

FET Materials

Can you make a transistor out of a metal?

Why are semiconductors so attractive for transistors?

Gates For FETs

How do we control conductance of a channel?

Depletion

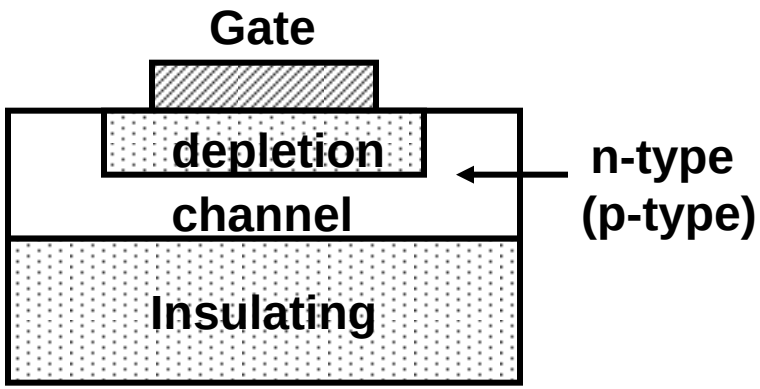

- Field controls depletion width, channel depth
- Reverse-bias p-n (JFET)
- Reverse-bias Schottky (MESFET)

Inversion

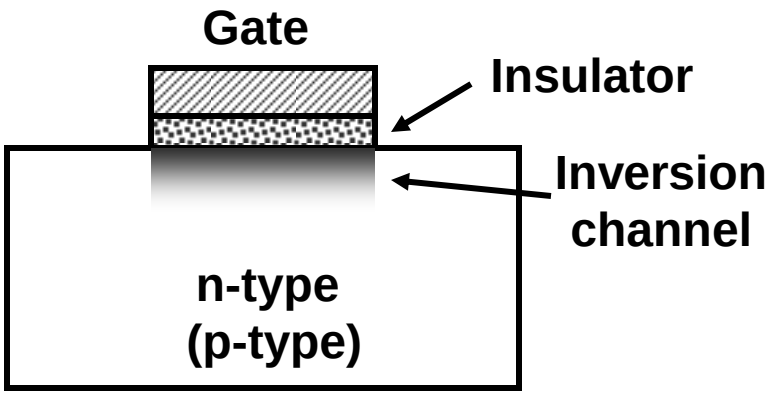

- Field inverts surface, controls surface charge density
- Metal-Insulator-Semiconductor (MISFET, MOSFET)