Introduction to Diodes

EECS 320

Introduction to Semiconductor Devices

Linear Circuits

In EECS 215 you learned about *linear* devices and circuits

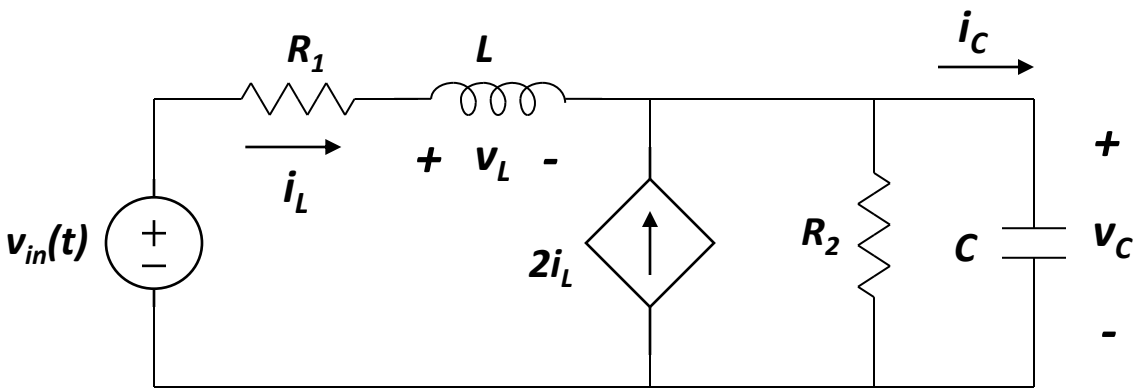

There are also important *nonlinear* devices:
Diodes* and *transistors

What is a Diode?

- Electronic device that allows current to flow in only one direction
- One-way valve
- Diode symbol points to direction of current flow

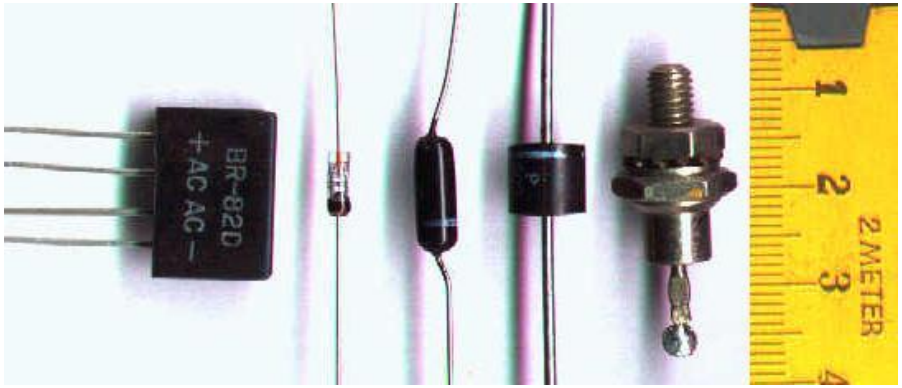

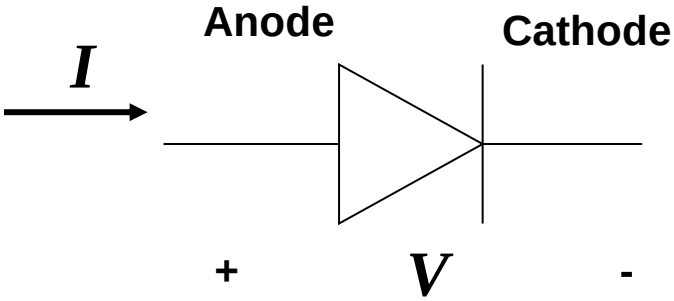

Diode Applications

- Rectifiers
- Power conversion
- Over-voltage protection
- Light emitter (light emitting diode LED)
- Light detector (photodiode, solar cell)

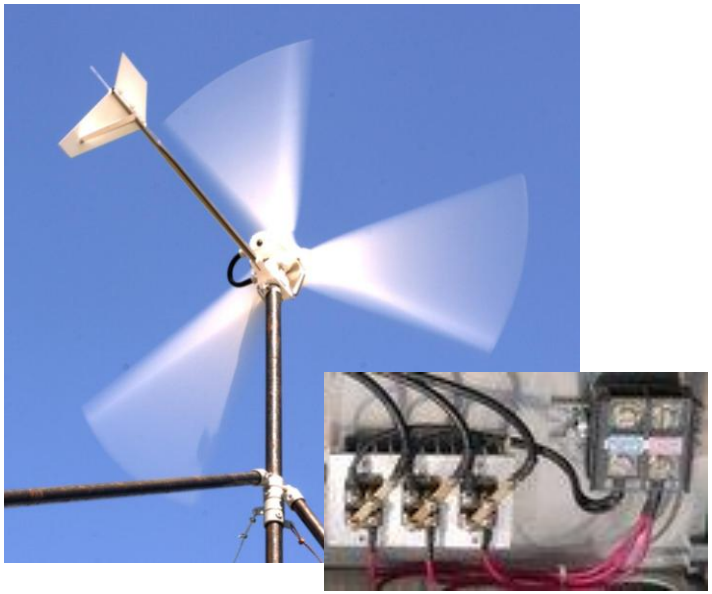

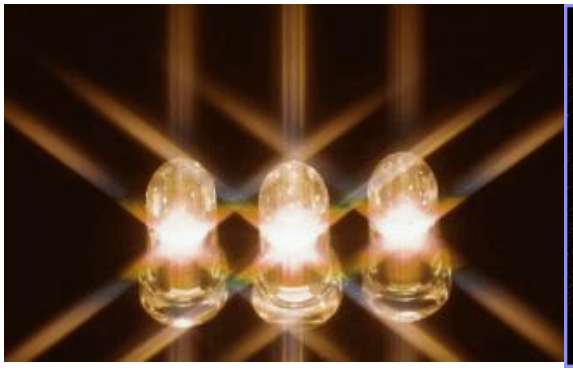

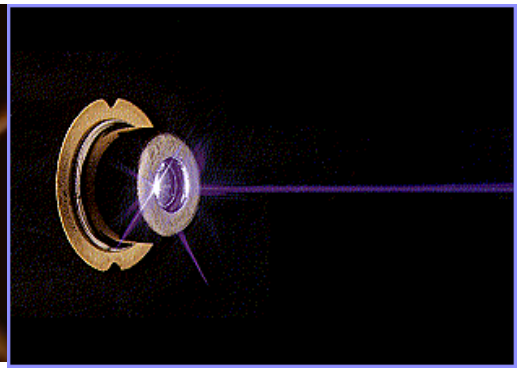

Light Sensitive Diodes

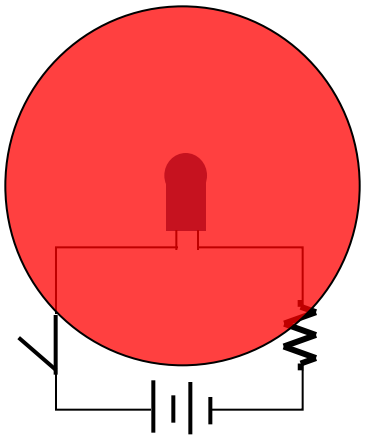

Light-emitting Diode

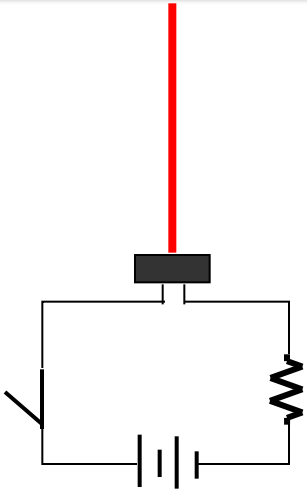

Semiconductor Laser

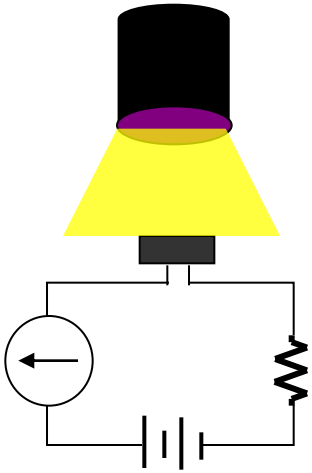

Visible Light Sensor

Ideal Diode

- No voltage drop in “forward” (short circuit)
- No current flow in “reverse” (open circuit)

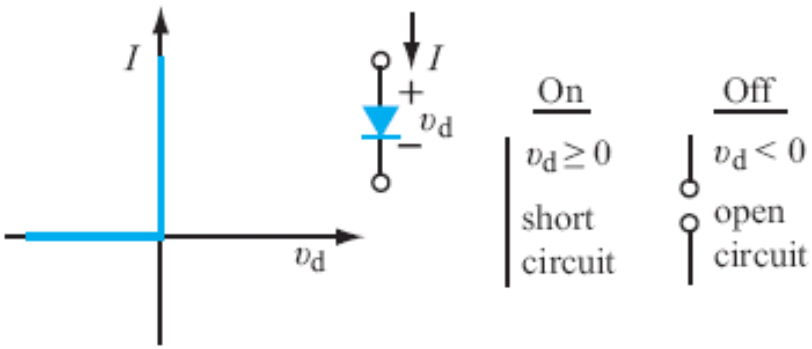

Diode circuit

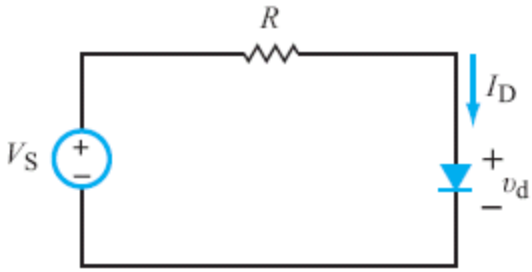

Forward direction (on)

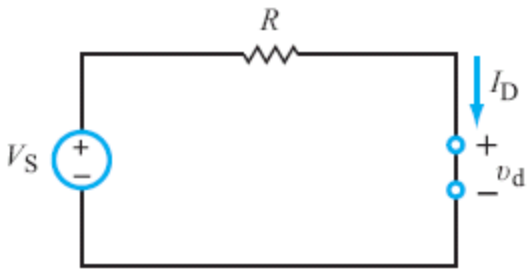

Reverse direction (off)

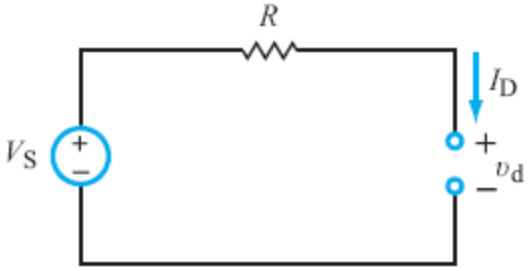

Circuit Analysis: Ideal Diode Model

- Replace diodes with open circuit or short circuit
- Analyze circuit
- Calculate voltages for diodes assumed to be “off” to verify that $v_D<0$
- Calculate currents for diodes assumed to be “on” to verify that current is in forward direction
- If assumptions of “on” or “off” are not validated, change assumptions and repeat procedure

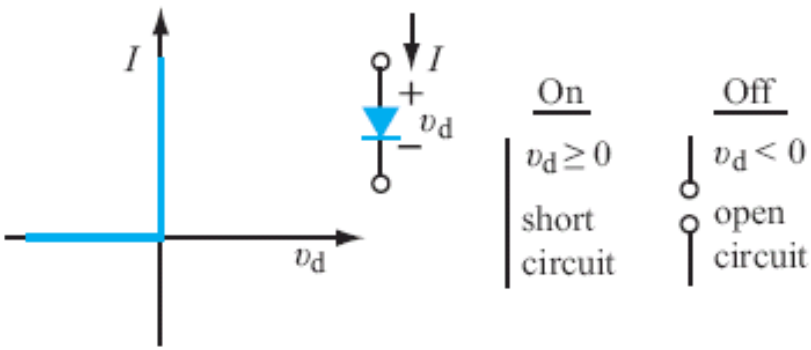

Example Diode Circuit

- Find V_x in circuit using ideal diode model
- Which of the following equivalent circuits is correct (and how do you know)?

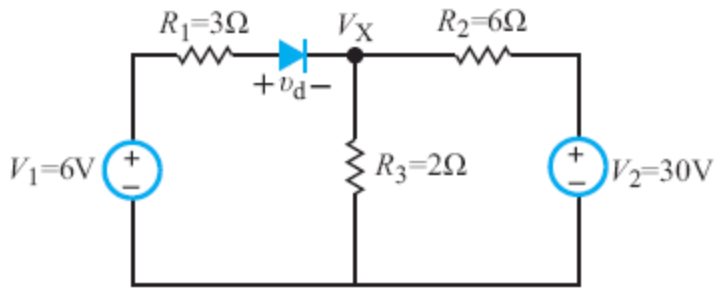

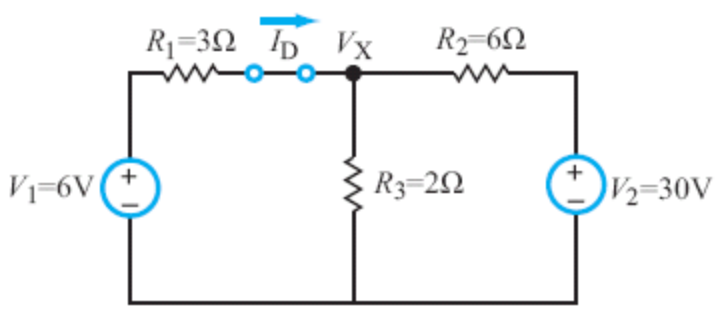

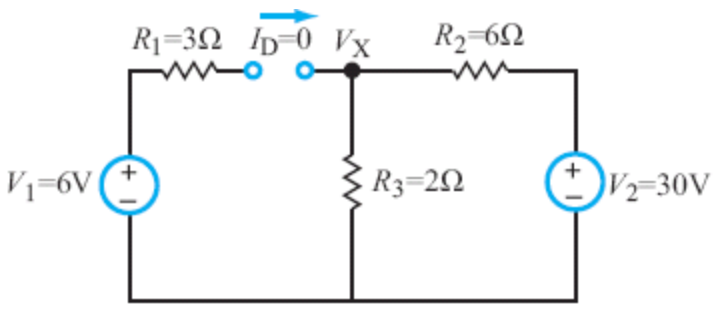

Diode Constant Voltage Drop Model

- In reality, there is a voltage drop across a diode in the forward direction V_F
- Diode turns "on" at $v_D=V_F$, "off" for $v_D<V_F$
- Solve circuits assuming $v_D=V_F$ or open circuit

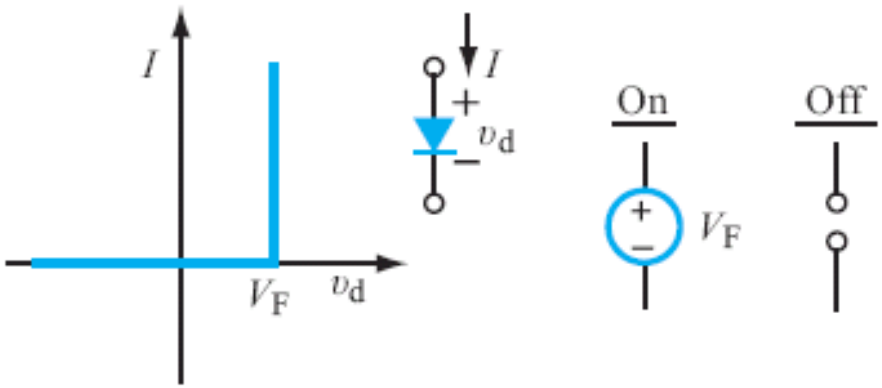

Forward bias: $v_D = V_F$; $I_D \geq 0$

Reverse bias: $v_D < V_F$; $I_D = 0$

Typical diode: $V_F \approx 0.7V$

Circuit Analysis: Voltage Drop Model

- Replace diodes with open circuit or $v_D=V_F$
- Analyze circuit
- Calculate voltages for diodes assumed to be "off" to verify that $v_D<V_F$
- Calculate currents for diodes assumed to be "on" to verify that current is in forward direction
- If assumptions of "on" or "off" are not validated, change assumptions and repeat procedure

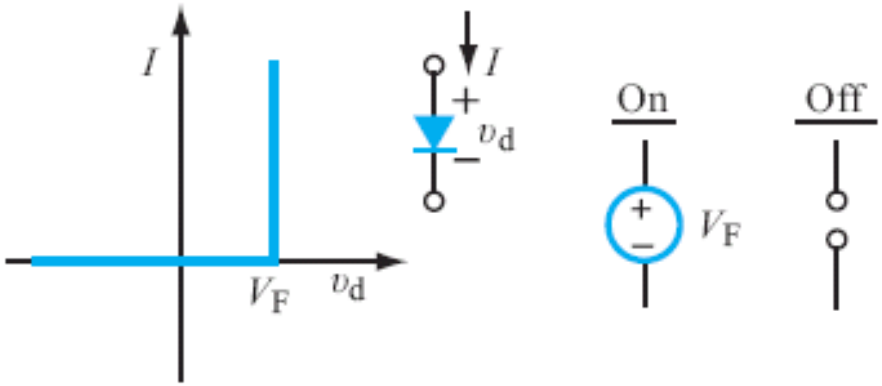

Example Diode Circuit

- Determine V_x in the circuit

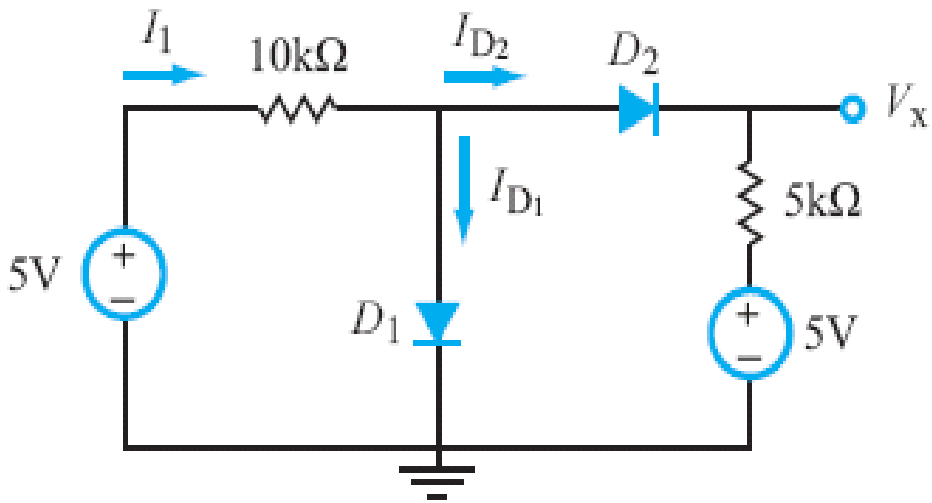

Semiconductor Diodes

- Ideal and constant-voltage-drop models for diodes are good approximations for circuit analysis
- How does a "real" diode behave?
  - Semiconductor p-n junction
  - Exponential I-V characteristics

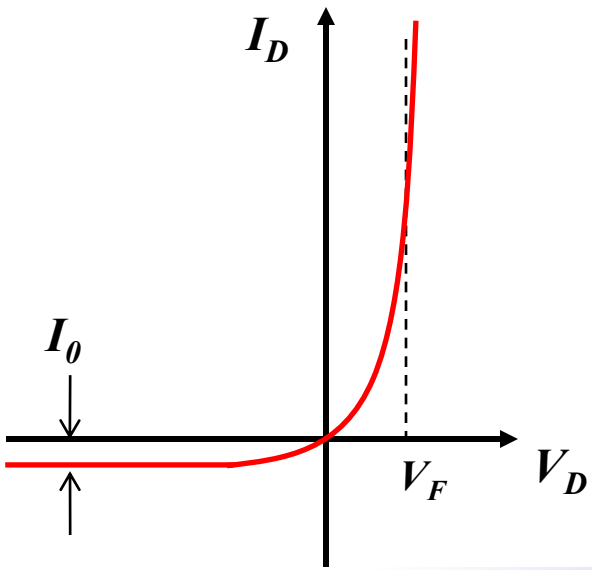

$$I_D = I_0\left(e^{v_D/v_T} - 1\right)$$

$$v_T = \frac{kT}{q} \approx 0.026V \text{ at room temperature, T=297K.}$$

Semiconductor P-N Junction

- Join “p-type” and “n-type” material
- In forward bias, small barrier to current flow
- In reverse bias, large barrier to current flow

Forward bias

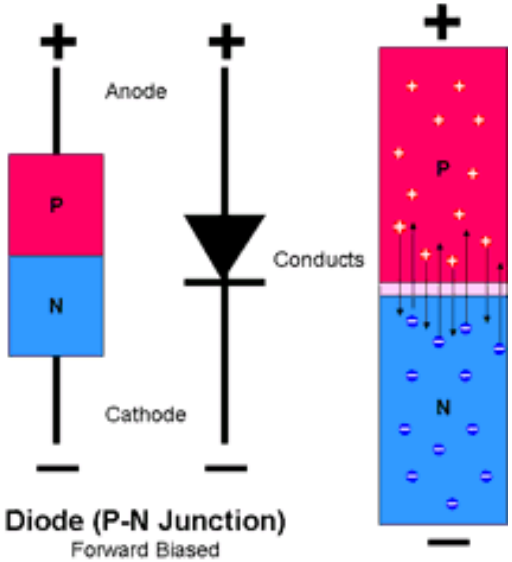

Reverse bias

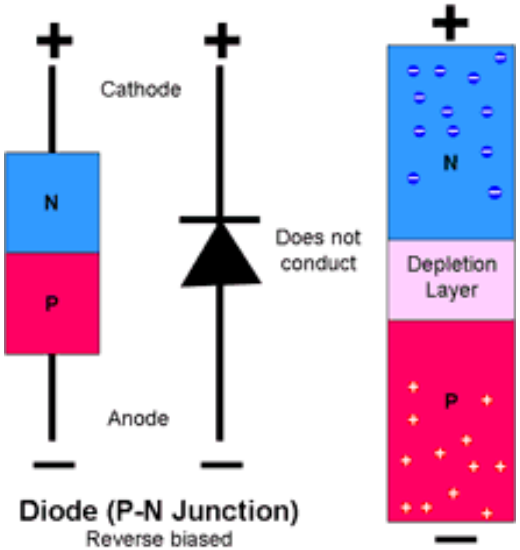

Circuit Analysis: Exponential Model

By superimposing Diode I-V and Linear circuit I-V, you can find graphical solution for circuit

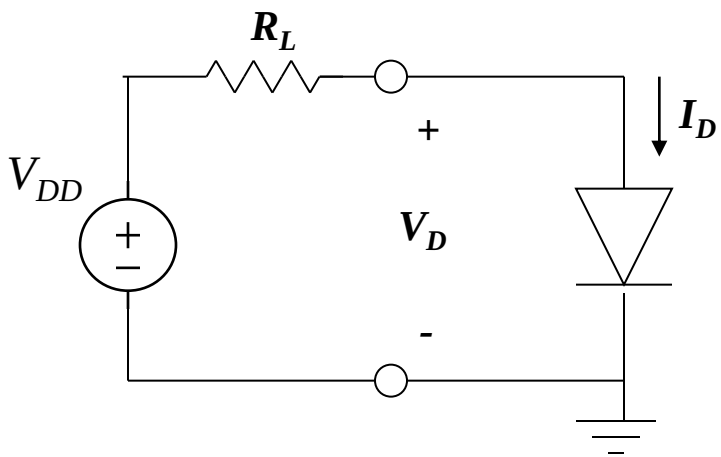

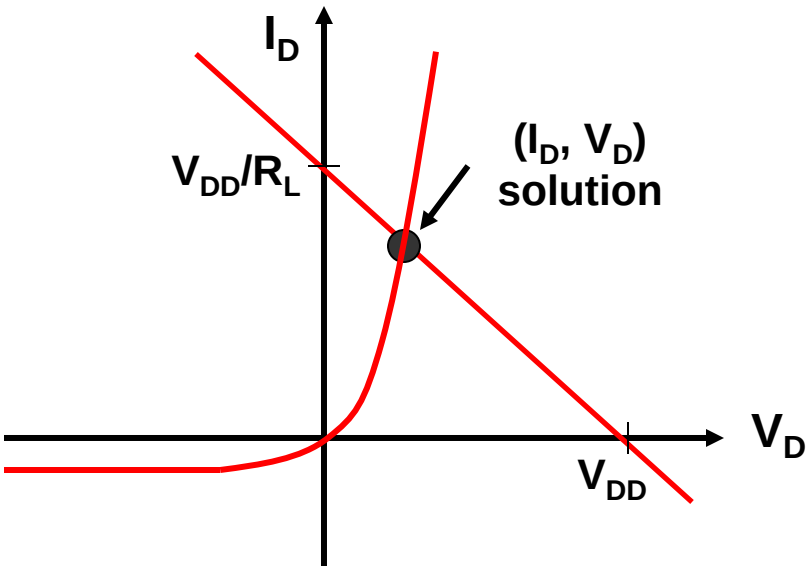

$$I_D = \frac{V_{DD} - V_D}{R_L} \qquad I_D = I_0\left[\exp\left(\frac{V_D}{v_T}\right) - 1\right]$$

Direct calculation results in transcendental equation, requiring non-linear solver, numerical techniques, etc

Circuit Analysis Example

- Determine the current I_D and voltage V_D assuming the exponential diode model with V_{DD} = 5V, R_L = 10Ω, and $I_0 = 10^{-11}$A = 10pA
- Use iteration on a calculator or computer (Matlab)

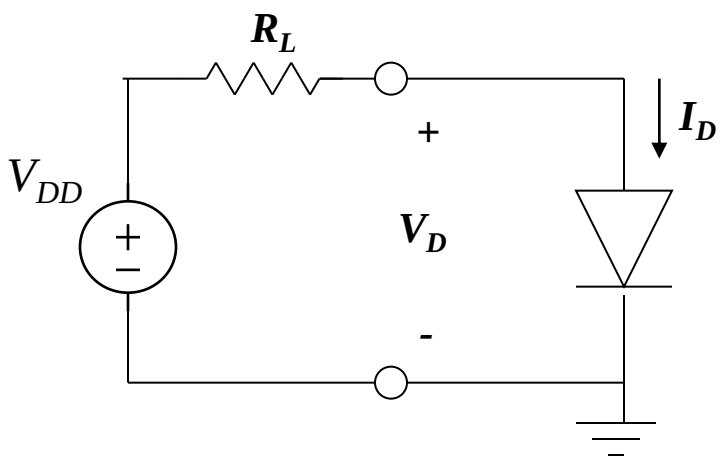

$$I_D = I_0\left[\exp\left(\frac{V_D}{v_T}\right) - 1\right]$$

$$I_D = \frac{V_{DD} - V_D}{R_L}$$