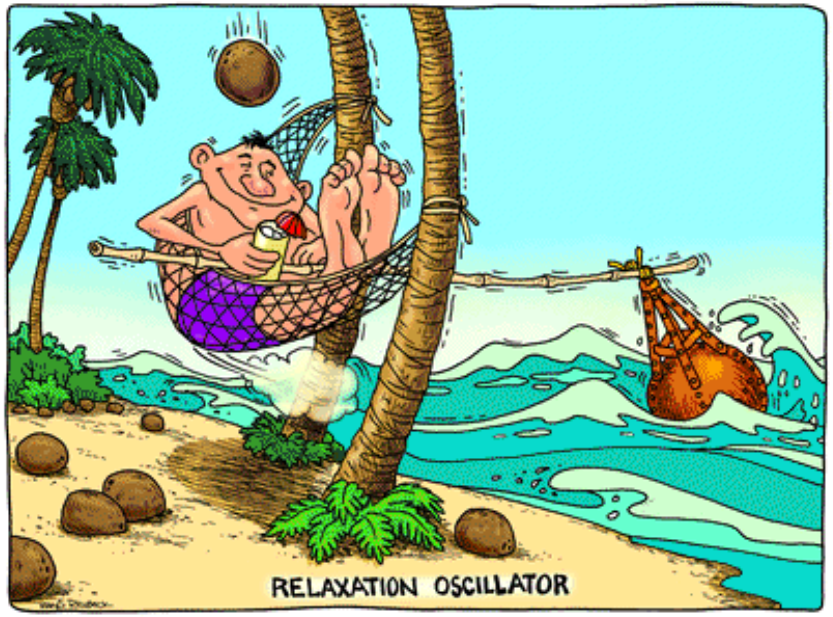

SECOND ORDER CIRCUITS I: INTRO, SERIES, PARALLEL CASES, GENERAL BOUNDARY CONDITION MATCHING

© Fred Terry
Winter, 2010

Second Order Circuits

- Exactly Two Energy Storage Elements (2 L's, 2 C's, or 1 L & 1 C)
- Resistors, Independent and Dependent Sources
- Result with be a Second Order Ordinary Differential Equation in t
- Useful for Understanding/Modeling Real Circuits & Other Physical Systems (e.g. Transmission Lines)
- Useful for Filter Circuits

General Approach

- Use KVL, KCL, Circuit Element Laws to find differential equation for circuit problem
- Find the *Initial Conditions* (same as boundary conditions)
  - <u>Must Have 1 Initial Condition Per Energy Storage Element</u>
- Find the *Natural Solution* (homogenous solution)
  - This is the same as the unforced circuit response
  - <u>Will Have 2 Independent Solutions</u>
- Find the *Forced Solution* (particular solution)
- Add the Forced+Natural Solutions to get the *Complete Solution*
- Eliminate the Unknowns (2 unknowns in a SOC) using the Initial Conditions

Simplest Possible SOC: Undamped LC

Assume Initial Conditions

$V_C(0)=V_0$

$I_L(0)=0$

Find V_C, I_C for $t \geq 0$

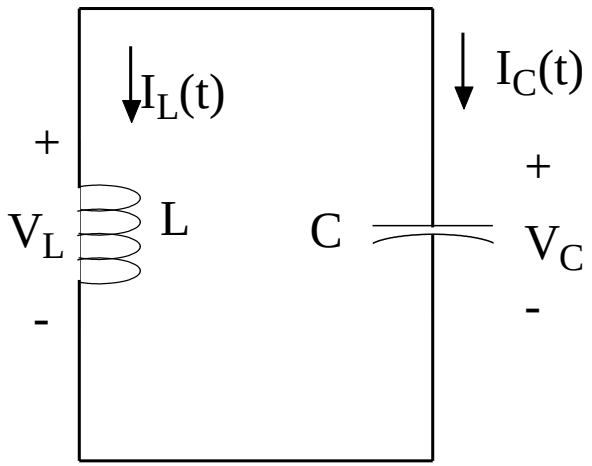

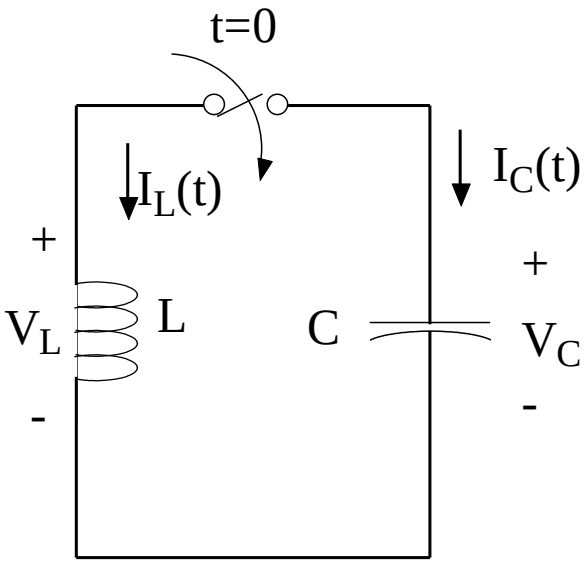

Simplest Possible SOC

Find Differential Equation

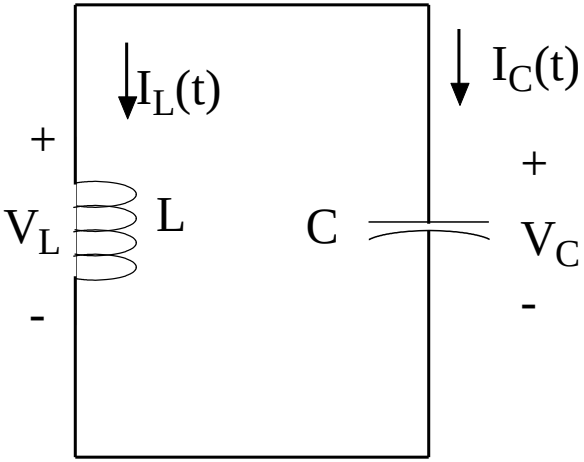

Simplest Possible SOC

No Forcing Source (Function) so Natural Soln=Complete Soln

Find it

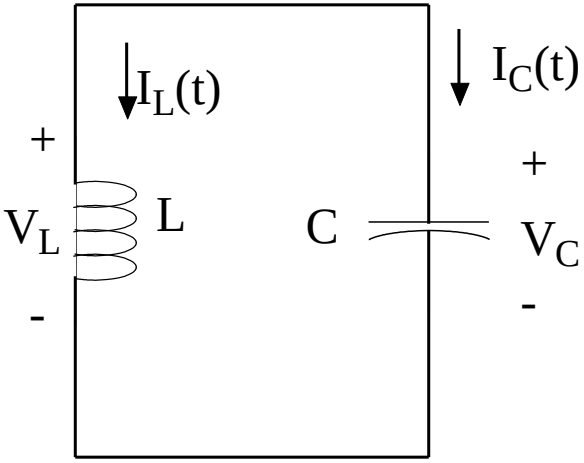

Simplest Possible SOC

Match Boundary Conditions

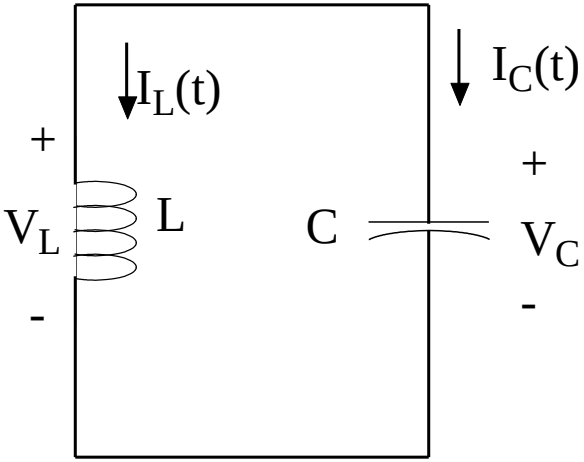

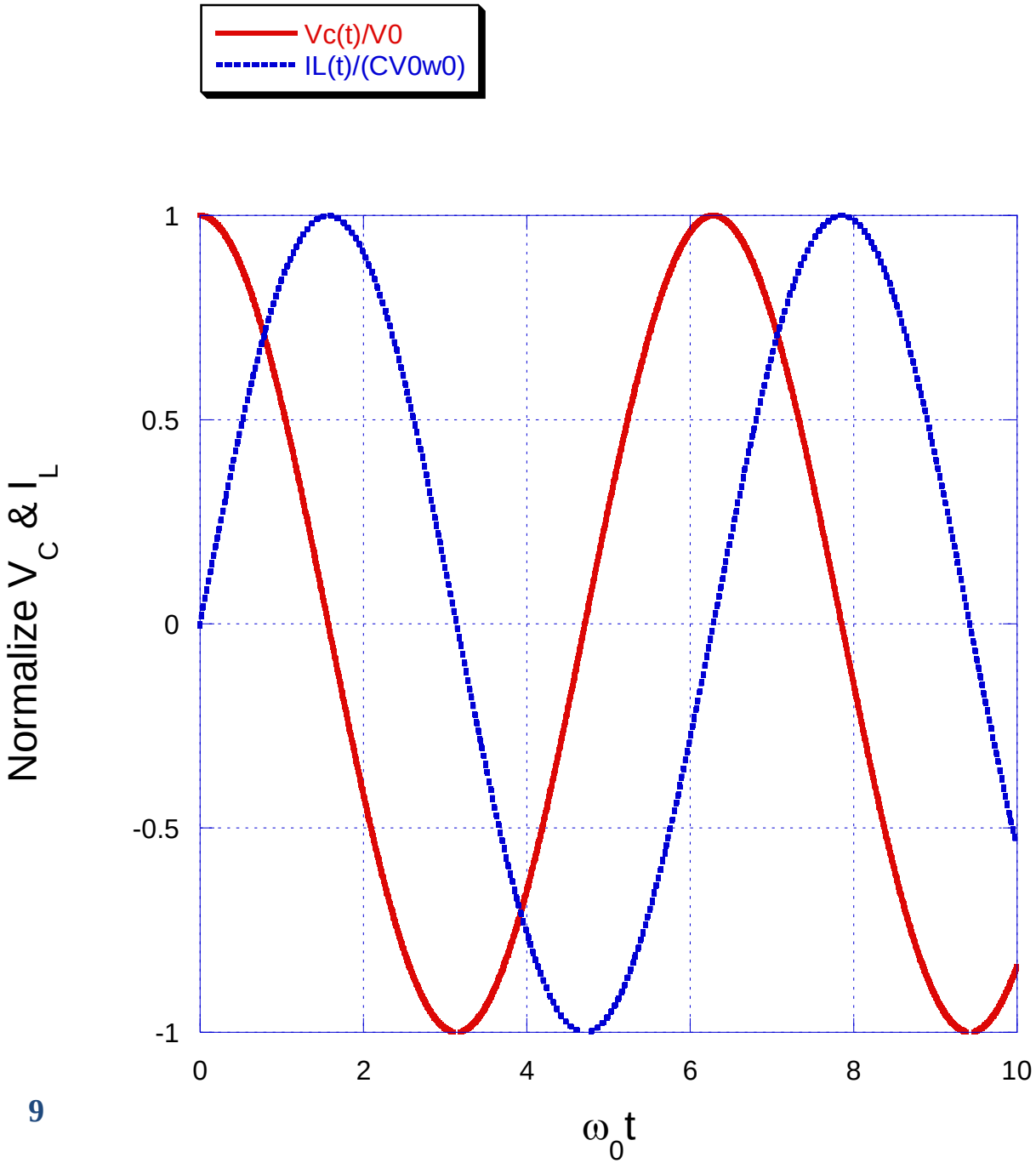
Vc(t)/V0
IL(t)/(CV0w0)
1
0.5
0
-0.5
-1
0
2
4
6
8
10
Normalize V_C & I_L
ω_0 t

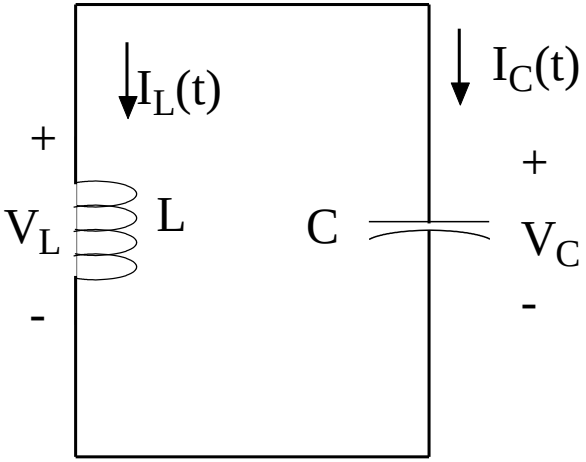
I_L(t)
I_C(t)
+
V_L
-
L
C
+
V_C
-

Power & Energy Vs. Time

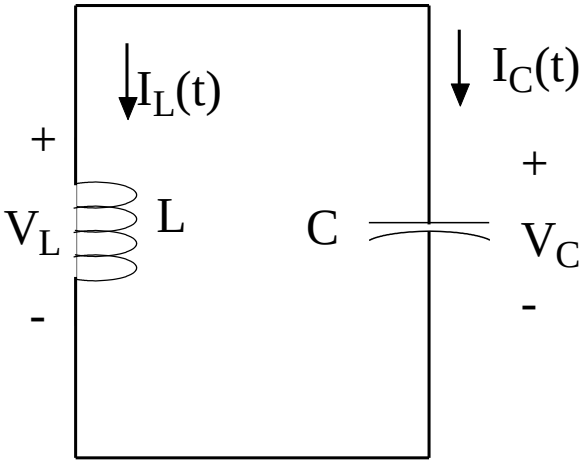

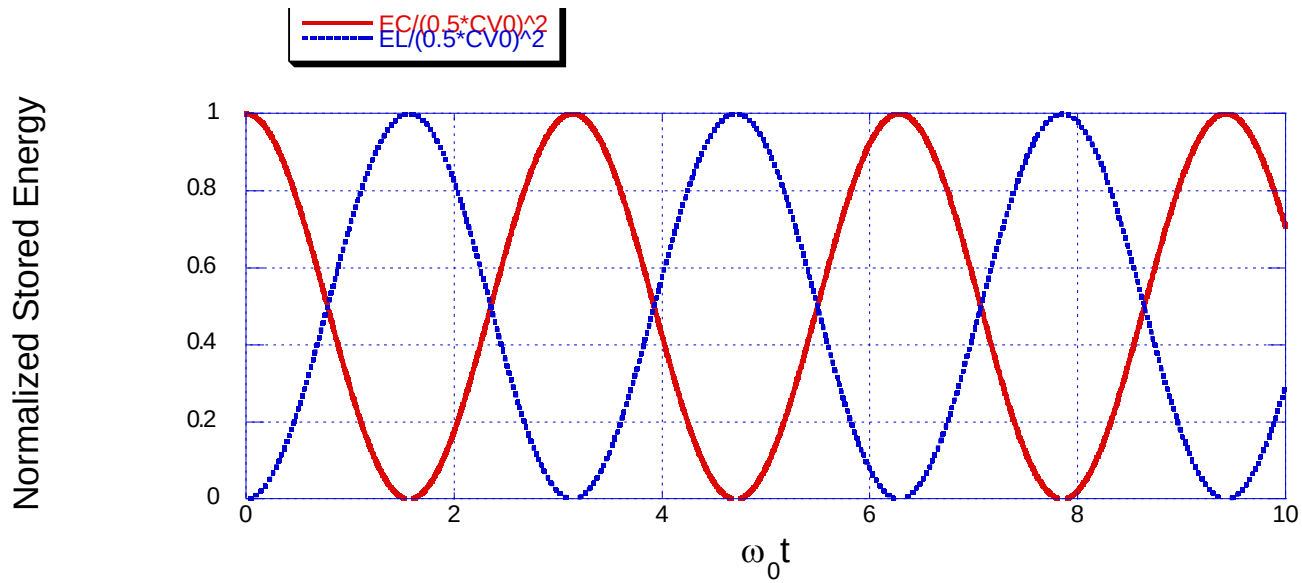
EC/(0.5*CV0)^2
EL/(0.5*CV0)^2
Normalized Stored Energy
1
0.8
0.6
0.4
0.2
0
0
2
4
6
8
10
ω0t

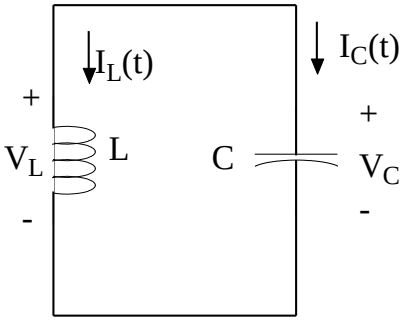
IL(t)
IC(t)
+
VL
L
-
C
+
VC
-

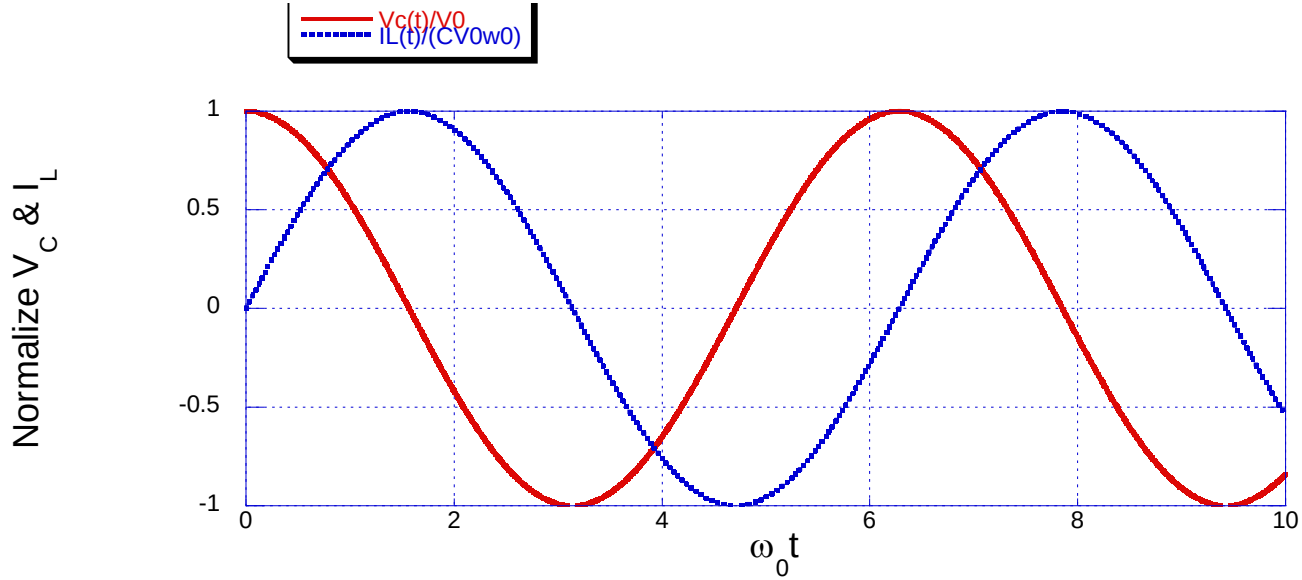
Vc(t)/V0
IL(t)/(CV0w0)
Normalize VC & IL
1
0.5
0
-0.5
-1
0
2
4
6
8
10
ω0t

Series RLC:

- Analysis of Important Case
- Introduce the concept of damping
- Illustration of General Methods
- Systematic look at the *only* solutions for 2nd order systems
- We will start with a natural decay problem
- Then a step response problem

Natural Response

Note $i_L = i_C = i$ (Passive Sign Convention)
Find Differential Equation for i(t)

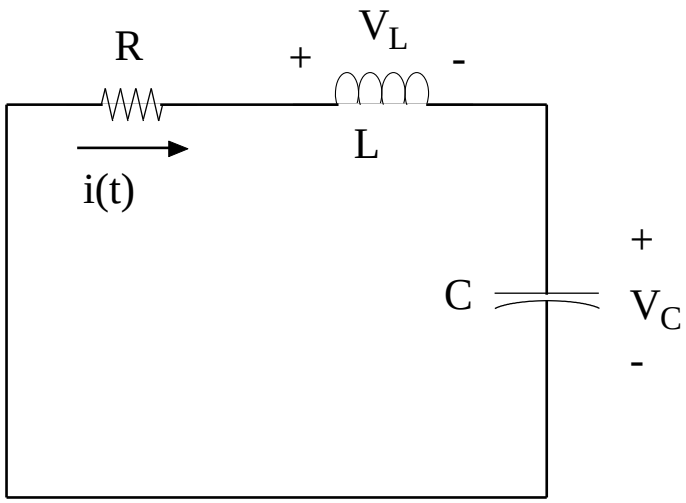

Natural Response

Note $i_L = i_C = i$ (Passive Sign Convention)

Find Differential Equation for v(t)

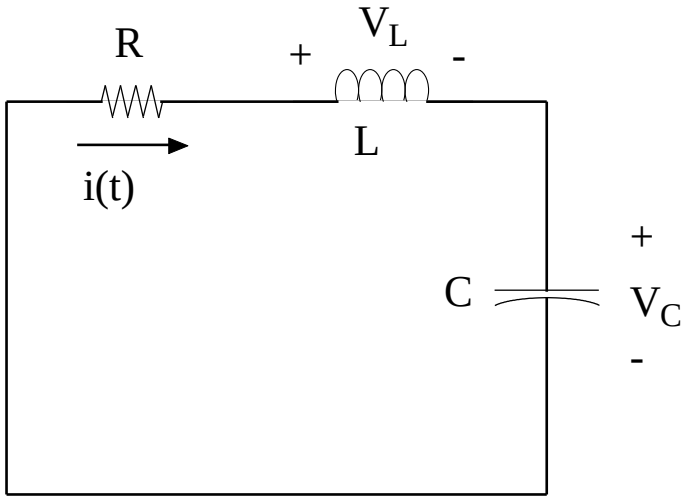

Analyze Result: Find Natural Solutions

$$L\frac{\partial^2 i}{\partial t^2}+R\frac{\partial i}{\partial t}+\frac{1}{C}i=0$$

$$\frac{\partial^2 i}{\partial t^2}+\left(\frac{R}{L}\right)\frac{\partial i}{\partial t}+\left(\frac{1}{LC}\right)i=0$$

$$\frac{\partial^2 i}{\partial t^2}+2\alpha\frac{\partial i}{\partial t}+\omega_0^2 i=0$$

$$\alpha\equiv\left(\frac{R}{2L}\right)\ for\ this\ circuit$$

$$\omega_0^2\equiv\left(\frac{1}{LC}\right)\ for\ this\ circuit$$

$$Trial\ Solution:$$

$$i=Ae^{st}$$

Characteristic Equation

$$\frac{\partial^2 i}{\partial t^2} + 2\alpha \frac{\partial i}{\partial t} + \omega_0^2 i = 0$$

Trial Solution:

$$i = Ae^{st}$$

Result:

$$s^2 + 2\alpha s + \omega_0^2 = 0$$

Characteristic Equation

$$s_{1,2} = -\alpha \pm \left[\alpha^2 - \omega_0^2\right]^{1/2}$$

Three Possibilities:

$\alpha > \omega_0$ <u>*Overdamped Response*</u>

$s_{1,2}$ *are real numbers (negative)*

$$i_n(t) = A_1 e^{s_1 t} + A_2 e^{s_2 t}$$

$\alpha < \omega_0$ <u>*Underdamped Response*</u>

$s_{1,2}$ *are complex numbers*

$$i_n(t) = A_1 e^{s_1 t} + A_2 e^{s_2 t}$$

$$s_{1,2} = -\alpha \pm \left[\alpha^2 - \omega_0^2\right]^{1/2} = -\alpha \pm j\omega_d$$

$$\omega_d = \left[\omega_0^2 - \alpha^2\right]^{1/2}$$

damped frequency of oscillation

$$i_n(t) = \left[B_1 \cos(\omega_d t) + B_2 \sin(\omega_d t)\right] e^{-\alpha t}$$

Characteristic Equation

$$\frac{\partial^2 i}{\partial t^2} + 2\alpha \frac{\partial i}{\partial t} + \omega_0^2 i = 0$$

Trial Solution:

$$i = Ae^{st}$$

Result:

$$s^2 + 2\alpha s + \omega_0^2 = 0$$

Characteristic Equation

$$s_{1,2} = -\alpha \pm \left[\alpha^2 - \omega_0^2\right]^{1/2}$$

Third Possibility:

$\alpha = \omega_0$ <u>*Critically Damped Response*</u>

$$s_1 = s_2 = -\alpha$$

$$i_n(t) = A_1 e^{-\alpha t} + A_2 e^{-\alpha t} = (A_1 + A_2)e^{-\alpha t}$$

$$i_n(t) = A_3 e^{-\alpha t}$$

What is the problem with this?

Try Solving Complete Problem

$$Assume\, Critical\ Damping$$

$$Assume\, i(0) = i_{L0} \neq 0$$

$$Assume\, V_c(0) = V_{C0} \neq 0$$

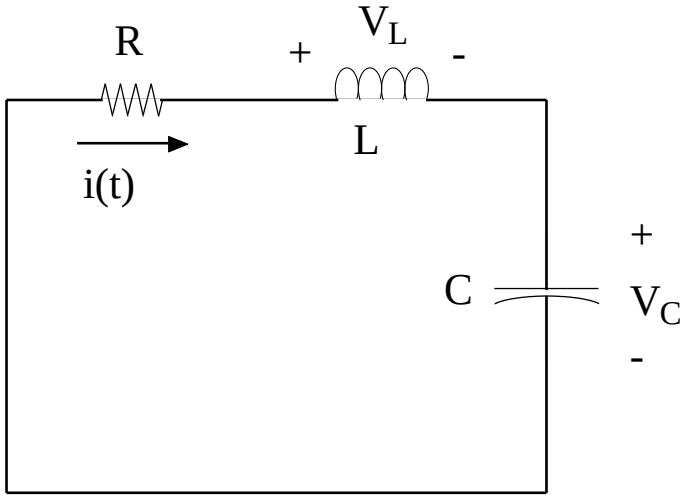

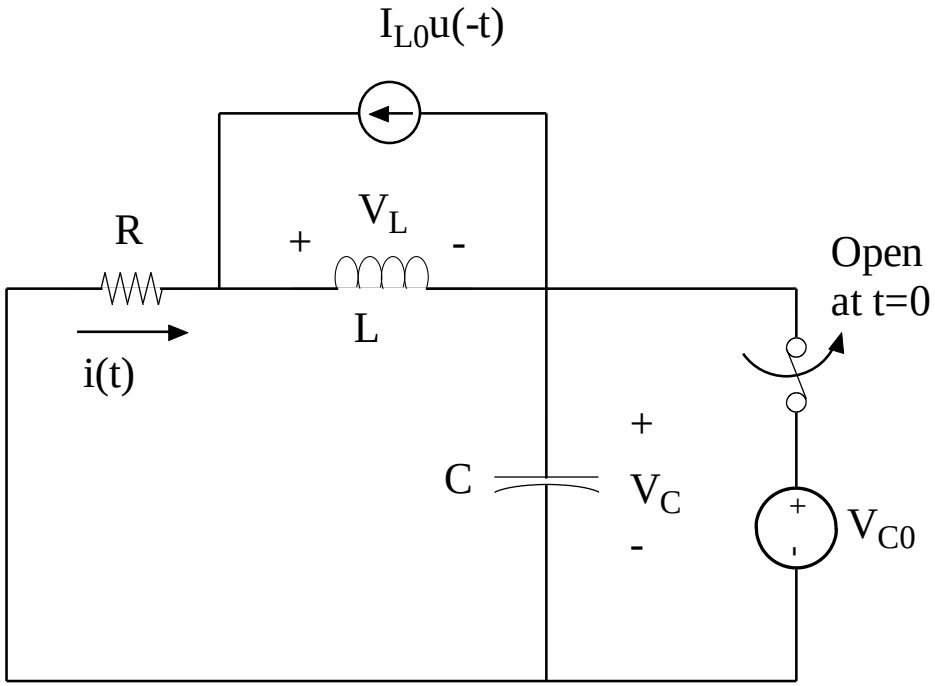

Try Solving Complete Problem

$$Assume\, Critical\ Damping$$

$$Assume\, i(0) = i_{L0} \neq 0$$

$$Assume\, V_c(0) = V_{C0} \neq 0$$

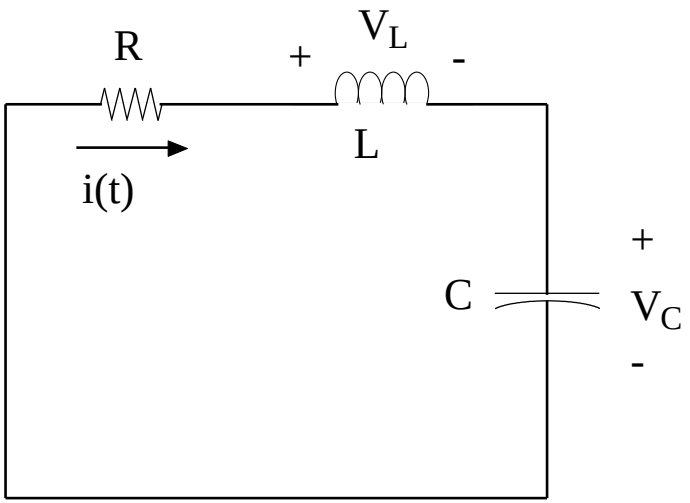

Critical Damping

$$\frac{\partial^2 i}{\partial t^2} + 2\alpha \frac{\partial i}{\partial t} + \omega_0^2 i = 0$$

$$\alpha = \omega_0 \quad \underline{\textit{Critically Damped Response}}$$

$$s_1 = s_2 = -\alpha$$

$$\textit{New Trial Solution}$$

$$i_n(t) = A_1 e^{-\alpha t} + A_2 t e^{-\alpha t} = (A_1 + A_2 t) e^{-\alpha t}$$

Solution Works and Provides 2nd Linearly Independent Time Response Function

$$\frac{\partial^2 i}{\partial t^2} + 2\alpha \frac{\partial i}{\partial t} + \omega_0^2 i = 0$$

$$\textit{Trial Solution}:$$

$$i = Ae^{st}$$

$$\textit{Result}:$$

$$s^2 + 2\alpha s + \omega_0^2 = 0$$

$$\textit{Characteristic Equation}$$

$$s_{1,2} = -\alpha \pm \left[\alpha^2 - \omega_0^2\right]^{1/2}$$

General Response for *Any* SOC

$$\frac{\partial^2 i}{\partial t^2} + 2\alpha \frac{\partial i}{\partial t} + \omega_0^2 i = f(t)$$

Natural/Homogeneous Equation

$$\frac{\partial^2 i}{\partial t^2} + 2\alpha \frac{\partial i}{\partial t} + \omega_0^2 i = 0$$

Only Three Possibilities for Natural Solution:

$\alpha > \omega_0$ *Overdamped Response*

$s_{1,2}$ *are real numbers (negative)*

$$i_n(t) = A_1 e^{s_1 t} + A_2 e^{s_2 t}$$

$\alpha < \omega_0$ *Underdamped Response*

$s_{1,2}$ *are complex numbers*

$$i_n(t) = A_1 e^{s_1 t} + A_2 e^{s_2 t}$$

$$s_{1,2} = -\alpha \pm \left[\alpha^2 - \omega_0^2\right]^{1/2} = -\alpha \pm j\omega_d$$

$$\omega_d = \left[\omega_0^2 - \alpha^2\right]^{1/2}$$

damped frequency of oscillation

$$i_n(t) = \left[B_1 \cos(\omega_d t) + B_2 \sin(\omega_d t)\right] e^{-\alpha t}$$

$\alpha = \omega_0$ *Critically Damped Response*

$$s_1 = s_2 = -\alpha$$

$$i_n(t) = A_1 e^{-\alpha t} + A_2 t e^{-\alpha t} = (A_1 + A_2 t) e^{-\alpha t}$$

Complete solution then given by:

$$i(t) = i_f(t) + i_n(t)$$

- Matching initial conditions/boundary conditions removes the two unknowns A_1, A_2
- Time constants are determined by the circuit topology-natural solution not by the forcing function
- We will examine special techniques for finding the forced solution for time varying $f(t)$

Solving Natural Decay Problem

$$Assume\, i(0) = i_{L0} \neq 0$$

$$Assume\, V_c(0) = V_{C0} \neq 0$$

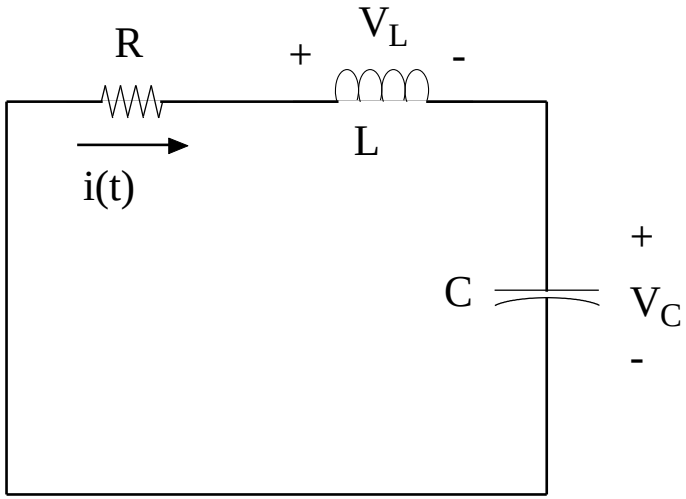

- Find α, $\omega_0 \rightarrow$Damping Case
- Source Free Case

  $\rightarrow$Natural Soln=Complete Soln.

- Match Initial Conditions (2) to Eliminate 2 remaining unknowns

  1st is easy $i(0)=i_{L0}$

  Look for KCL and/or KVL conditions to match to 2nd

$$V_C = -\left(iR + V_L\right) \quad KVL$$

$$= -\left(iR + L\frac{\partial i_L}{\partial t}\right)$$

$$V_C(0) = -\left(i(0)R + L\left.\frac{\partial i_L}{\partial t}\right|_{t=0}\right)$$

$$V_{C0} = -\left(i_{L0}R + L\left.\frac{\partial i_L}{\partial t}\right|_{t=0}\right)$$

$$Assume\, i(0) = i_{L0} \neq 0$$

$$Assume\, V_c(0) = V_{C0} \neq 0$$

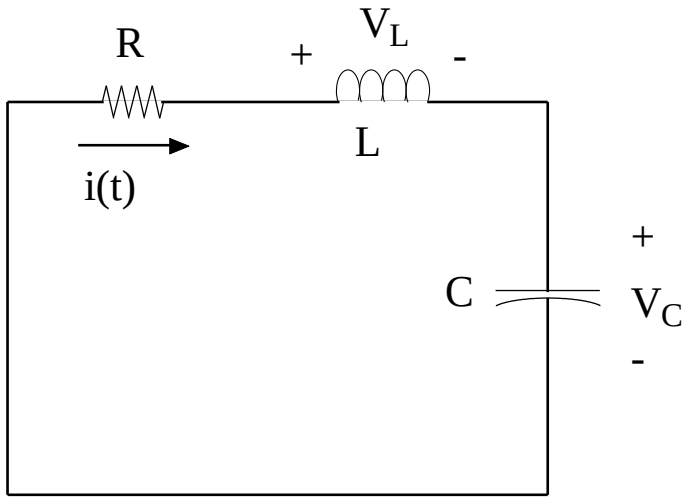

Natural Decay Problem: Numeric Examples

$L=1\mu H$ $C=1\mu F$ $R=3\Omega$

$i_{L0}=0$ $V_{C0}=5V$

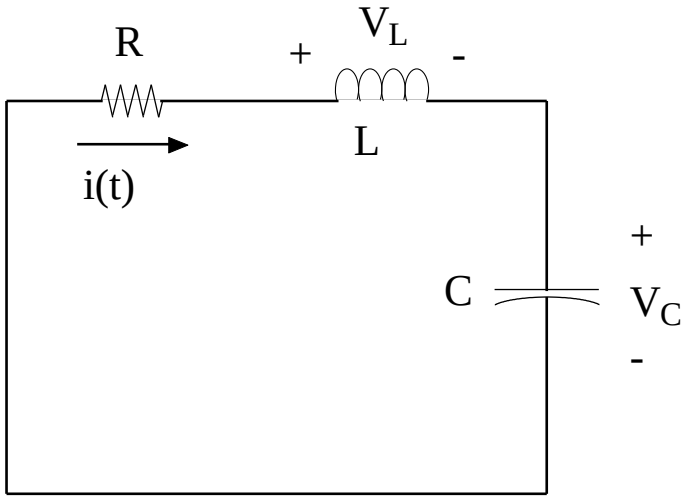

Damping Natural Response Example

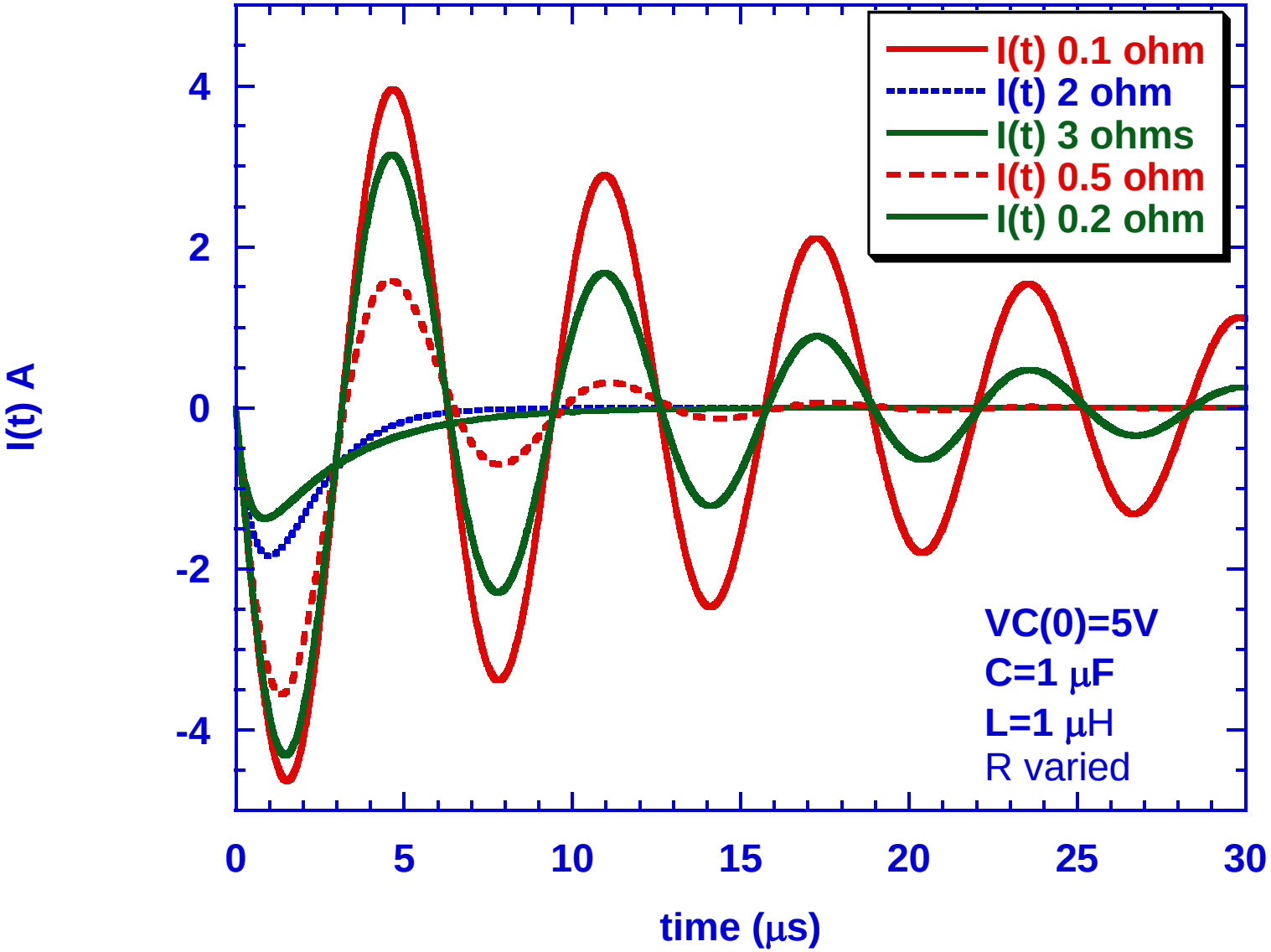

Over-Damped Response

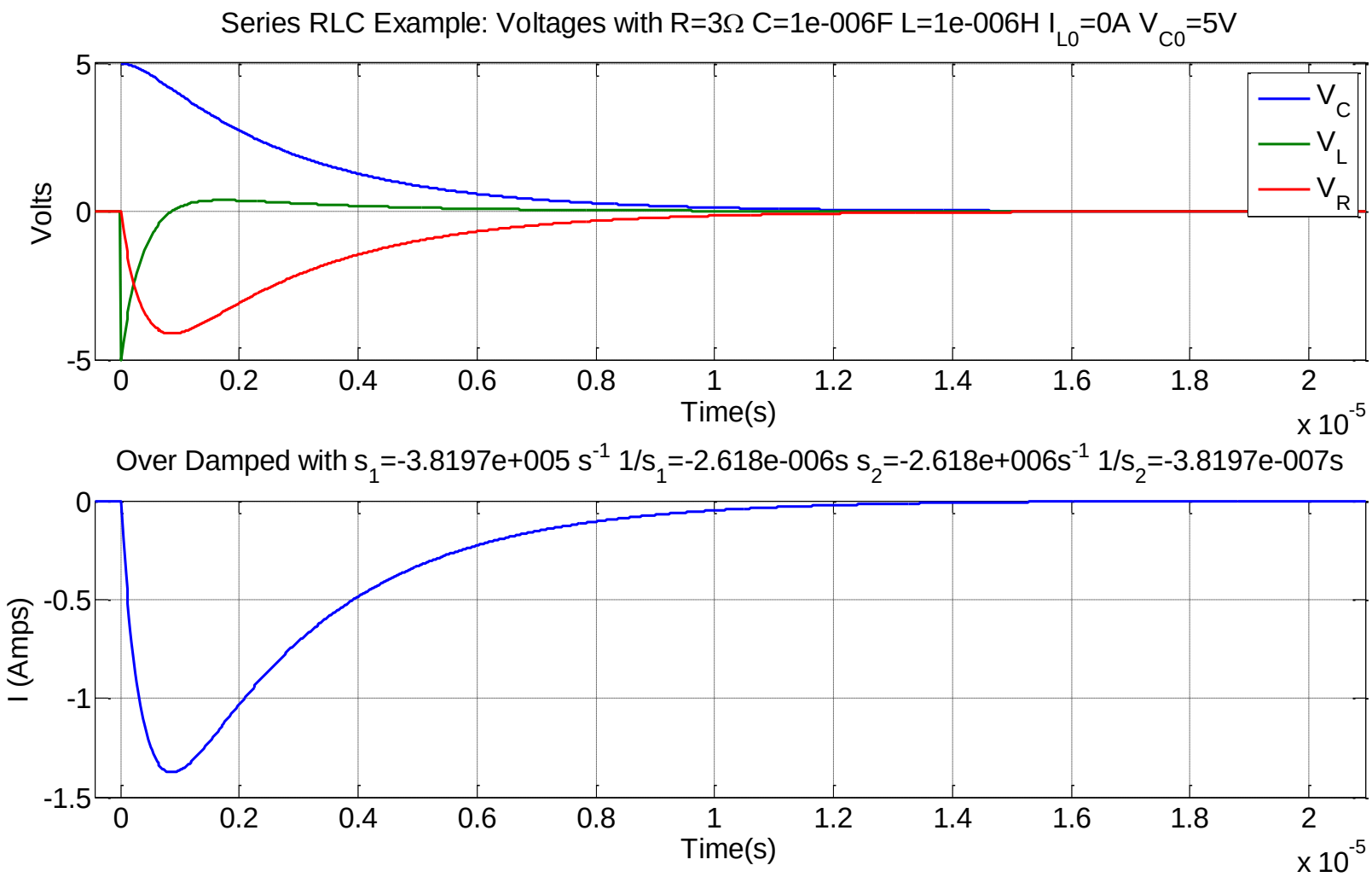

Over-damped Response Power/Energy

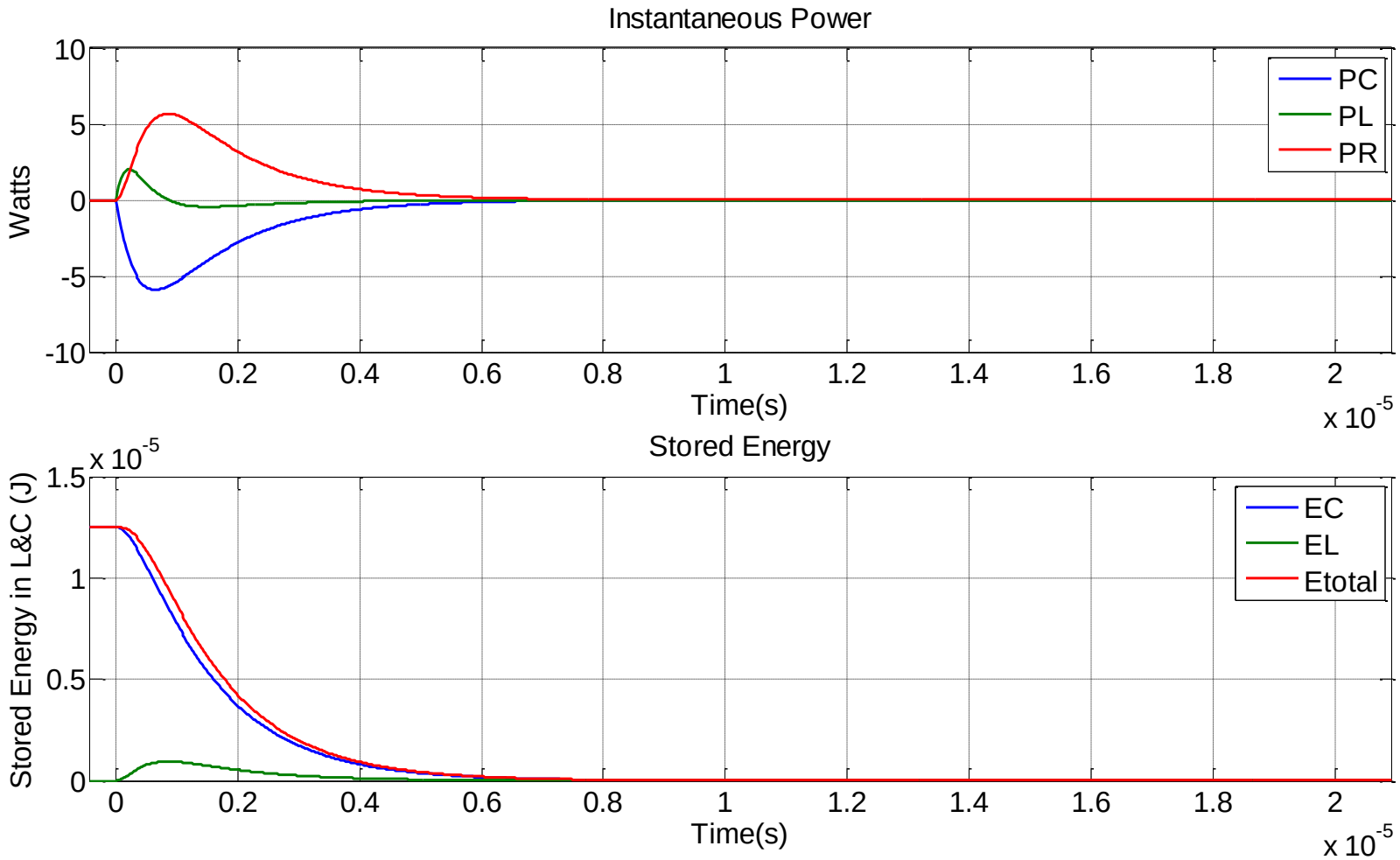

Critically Damped Response

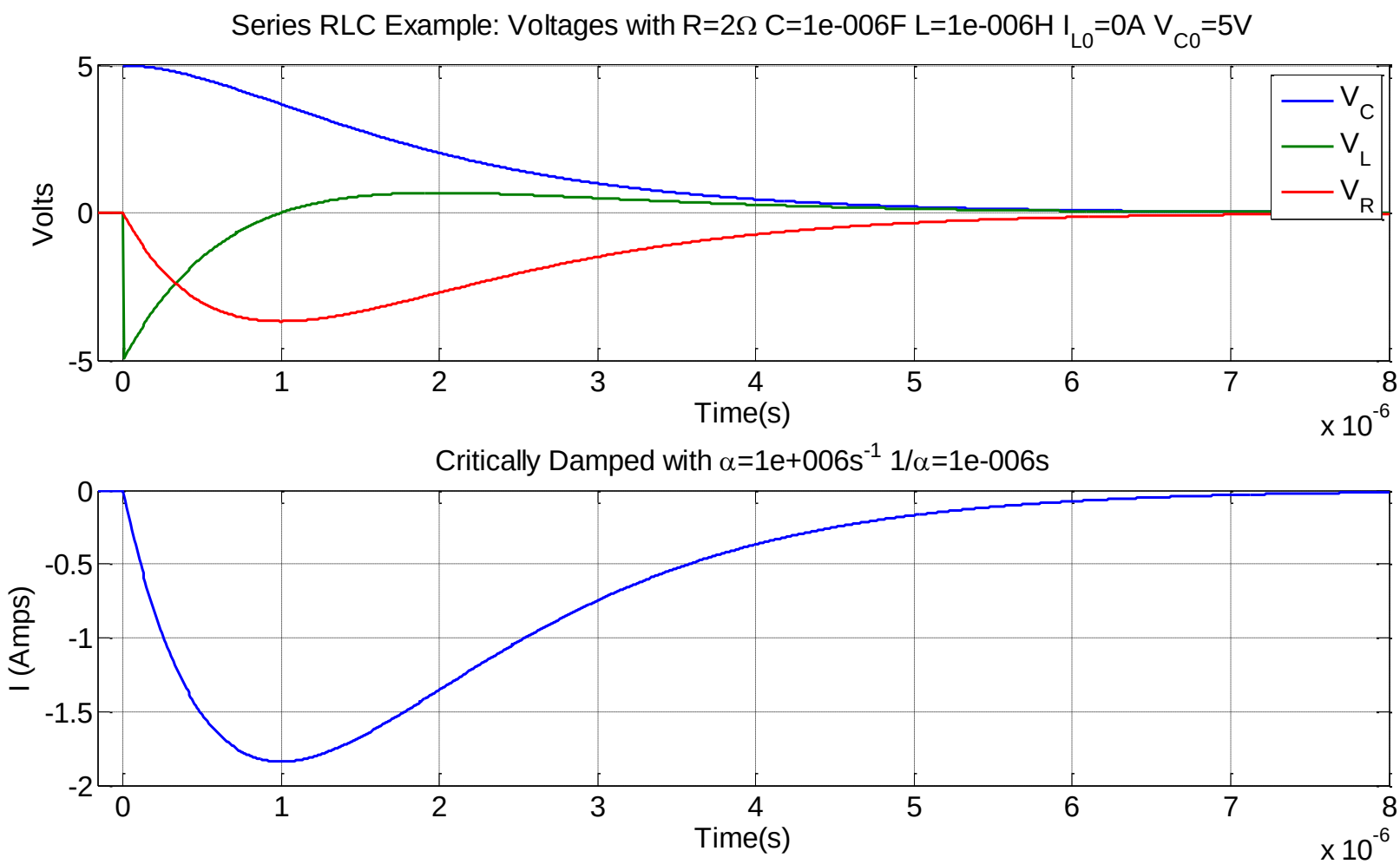

Critically Damped Power/Energy

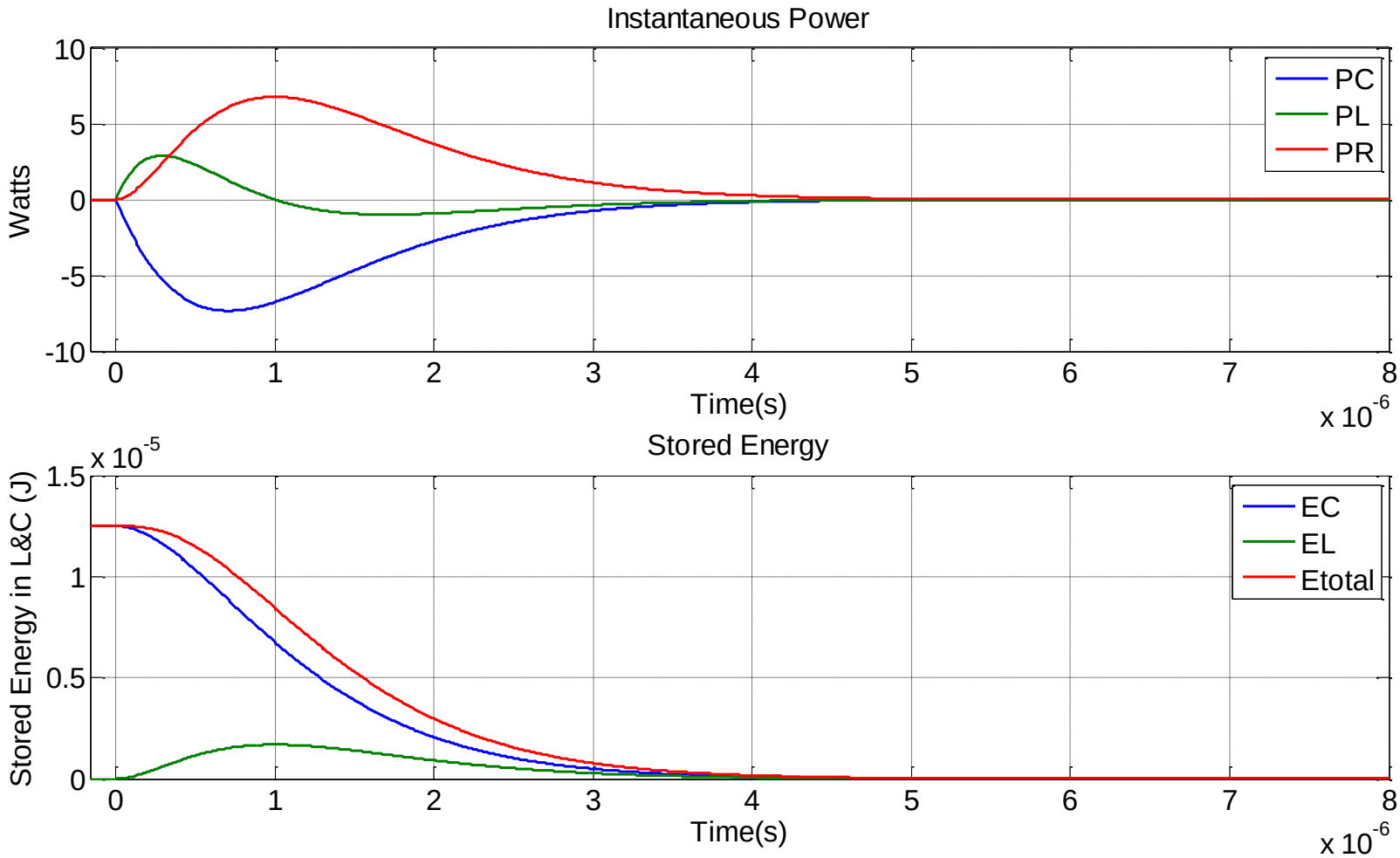

Under-Damped

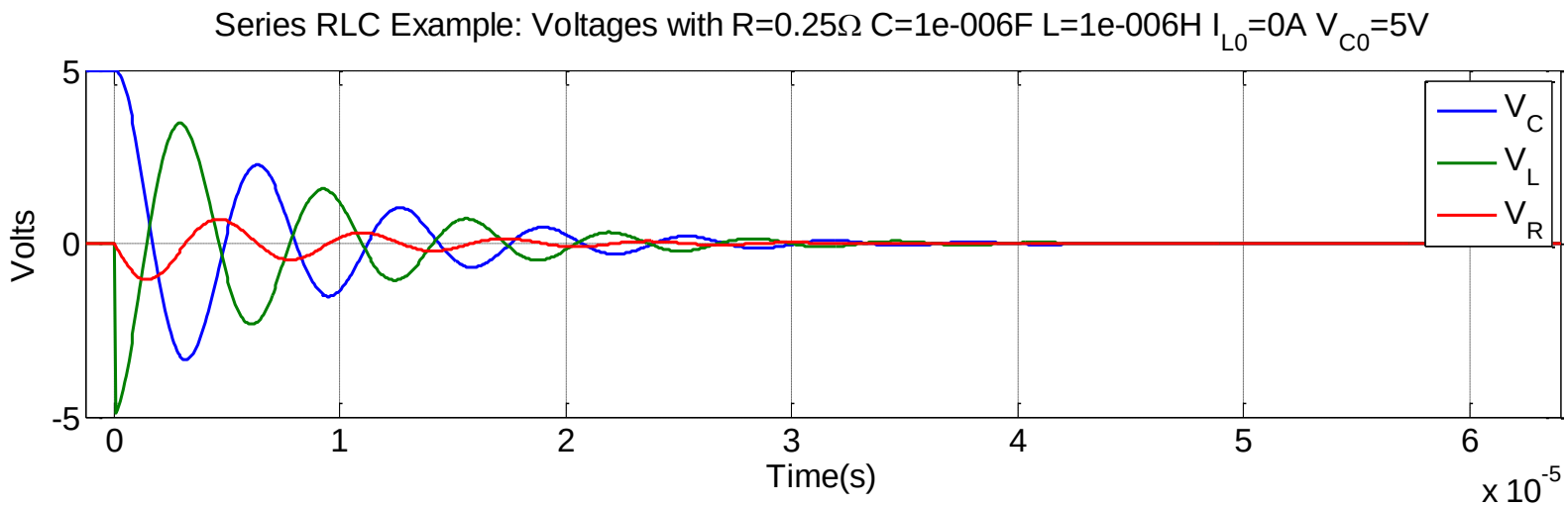

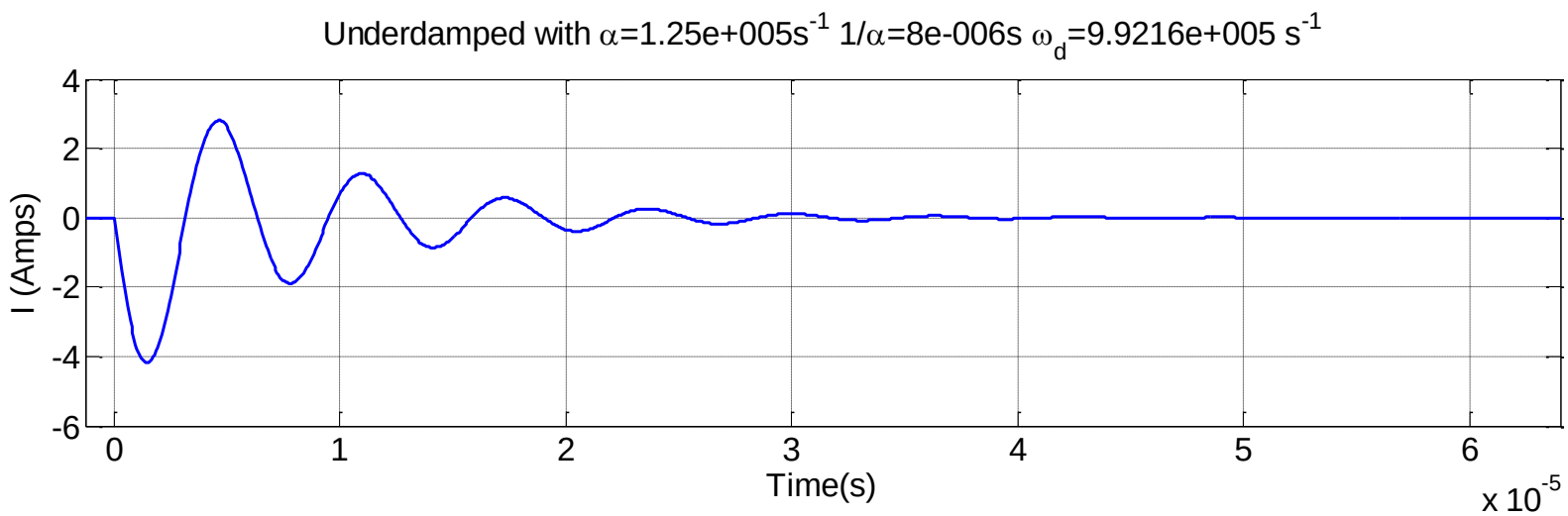

Under-Damped Power/Energy

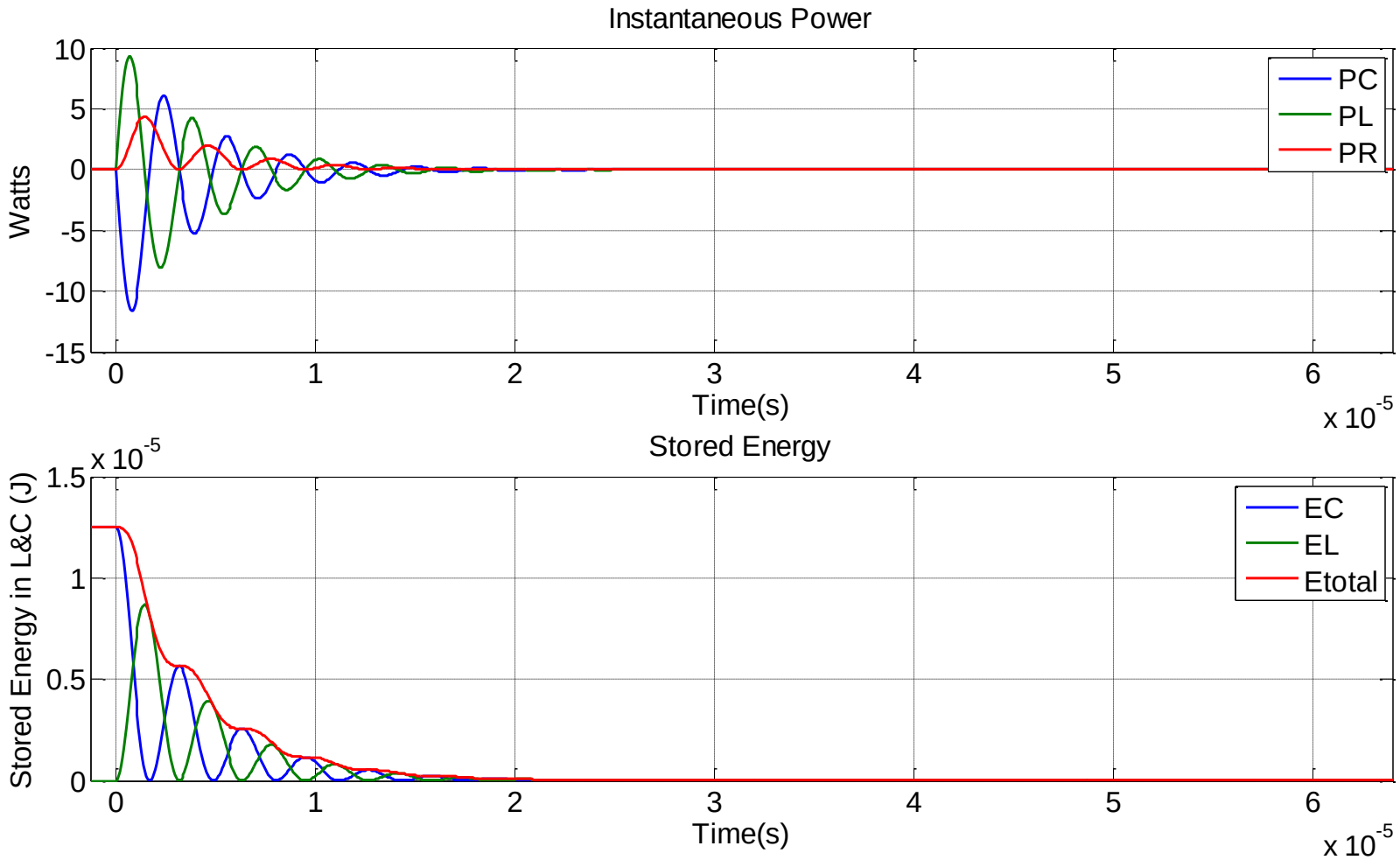

Step Response

Find Differential Equation

This time we'll do V_C

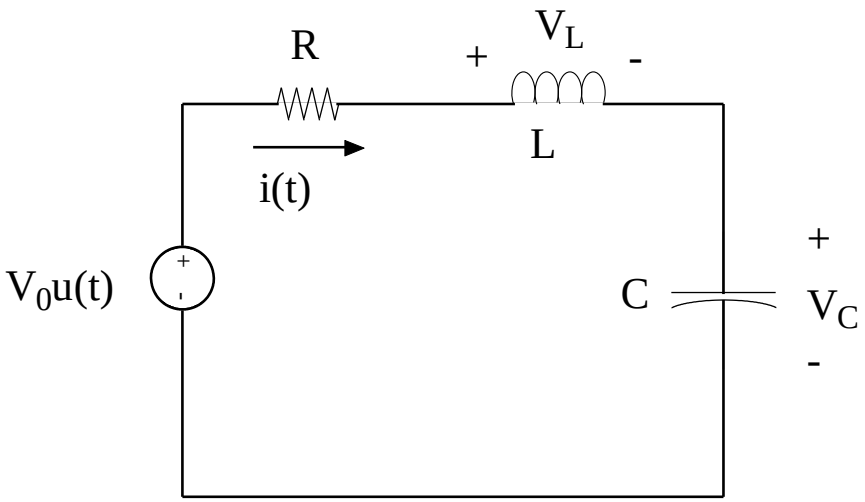

Step Response

Solve for L=1μH C=1μF
R=0.25Ω V_0=1V

Get V_{cn}, V_{cf}

Match Initial Conditions to
$V_c(t)=V_{cn}+V_{cf}$

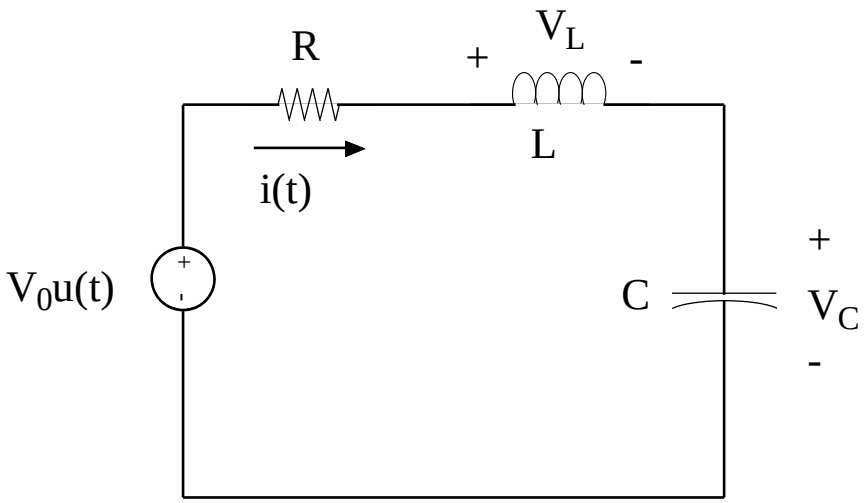

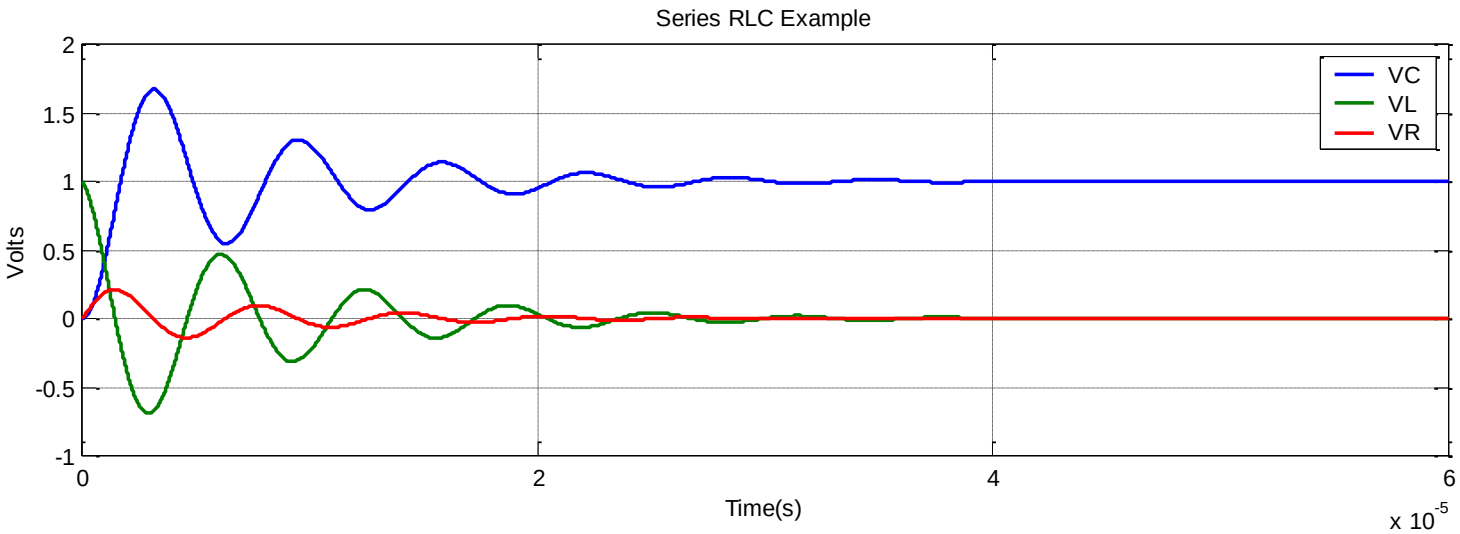
Series RLC Example
VC
VL
VR
Volts
2
1.5
1
0.5
0
-0.5
-1
0
2
4
6
Time(s)
x 10^-5

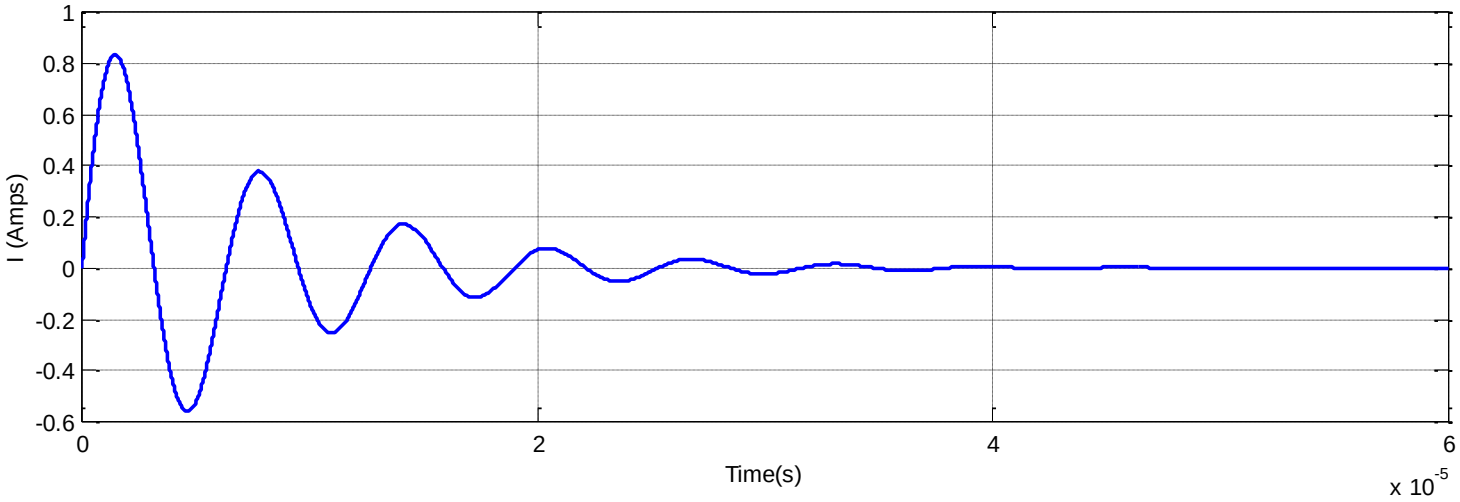
I (Amps)
1
0.8
0.6
0.4
0.2
0
-0.2
-0.4
-0.6
0
2
4
6
Time(s)
x 10^-5

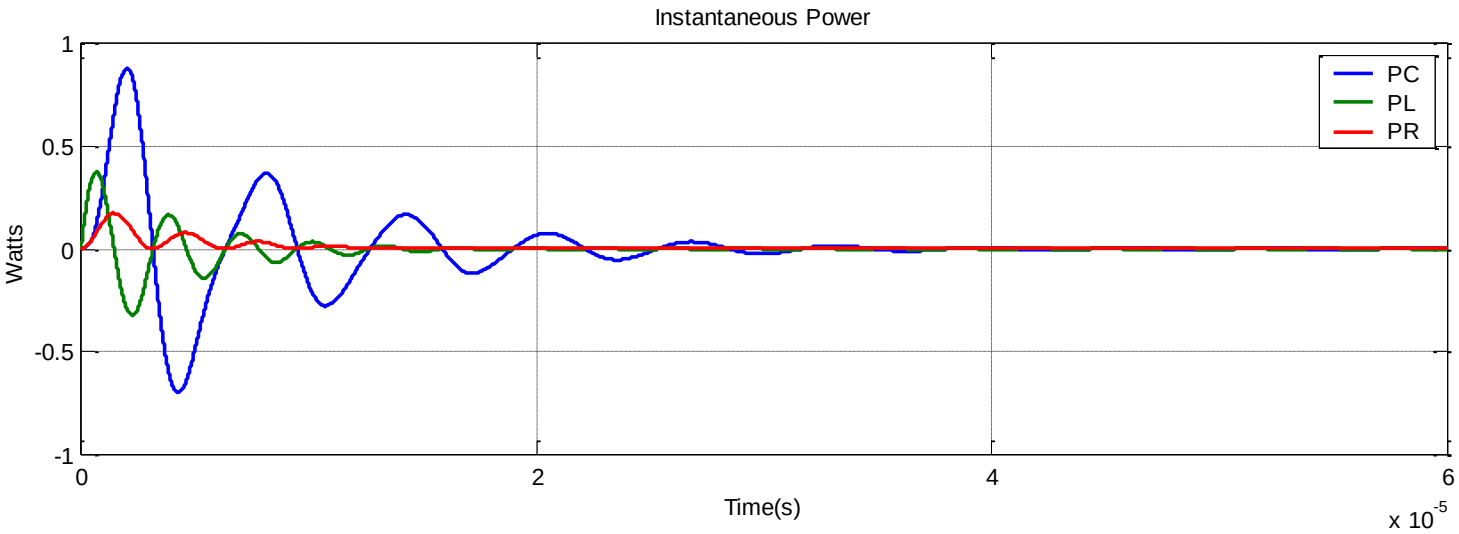
Instantaneous Power
Watts
Time(s)
x 10^-5
PC
PL
PR
1
0.5
0
-0.5
-1
0
2
4
6

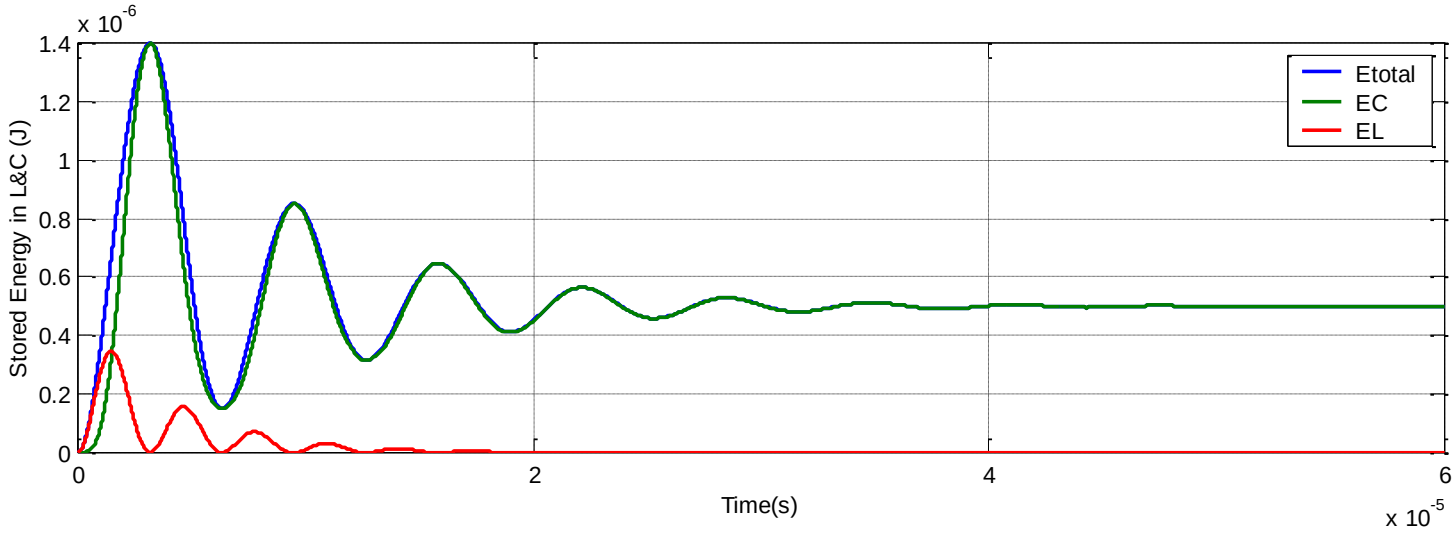
x 10^-6
Stored Energy in L&C (J)
Time(s)
x 10^-5
Etotal
EC
EL
1.4
1.2
1
0.8
0.6
0.4
0.2
0
0
2
4
6

Parallel RLC

- Find Governing Differential Eqn.
- Find Natural Response
- Find Forced Response
- Total soln=nat+forced
- Find Initial (Boundary) Conditions
- Match total solution to Initial Conditions

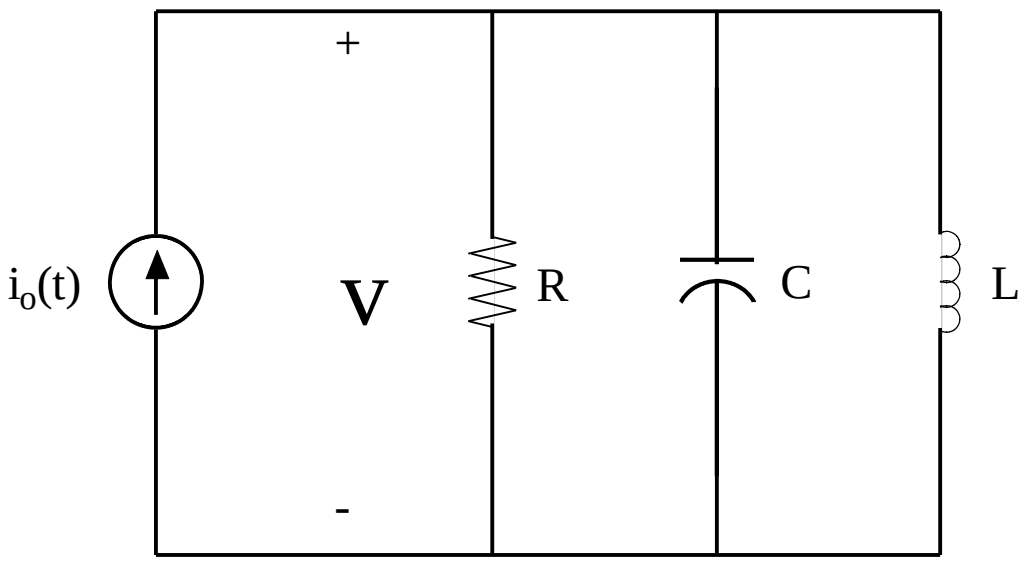

3 Numerical Cases

$i_0(t) = (1A)u(t) \quad L = 1\mu H \;\; C = 1\mu F$

$R_1 = 0.25\Omega$

$R_2 = 0.5\Omega$

$R_3 = 1\Omega$

Parallel RLC: Differential Equation

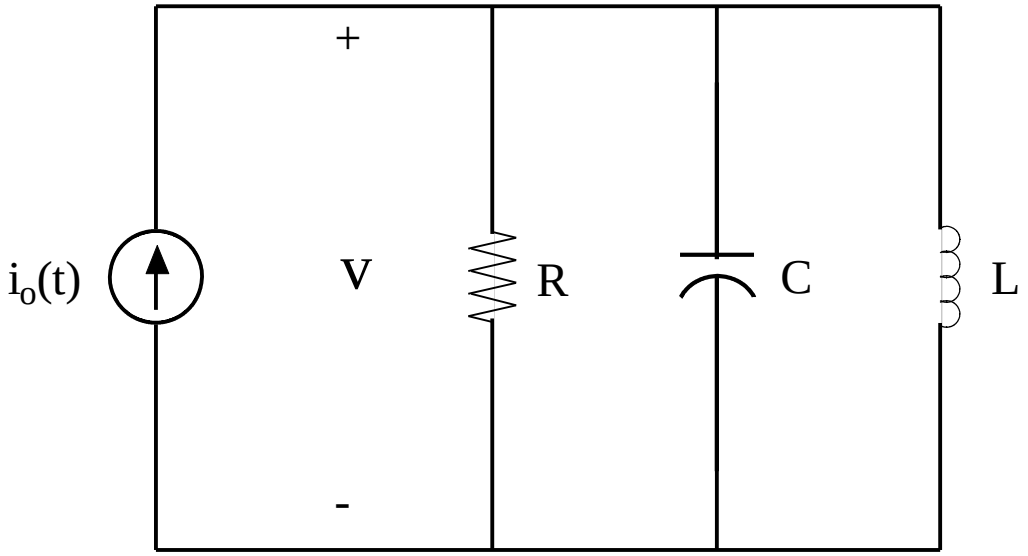

Parallel RLC: Natural Response

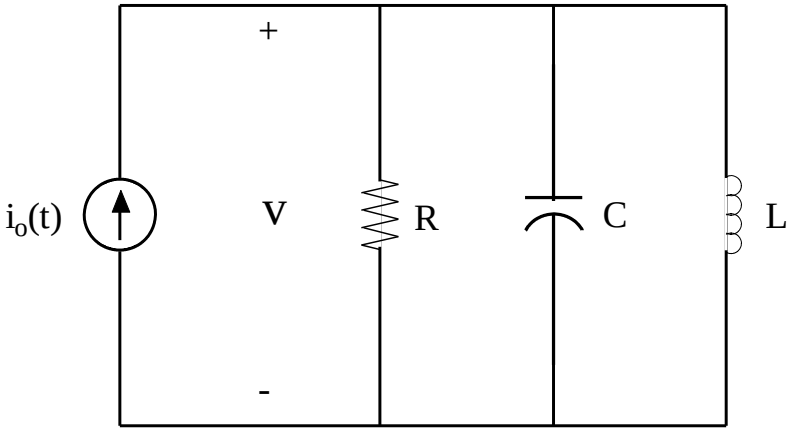

Parallel RLC: Forced Response (Step) +Complete Soln

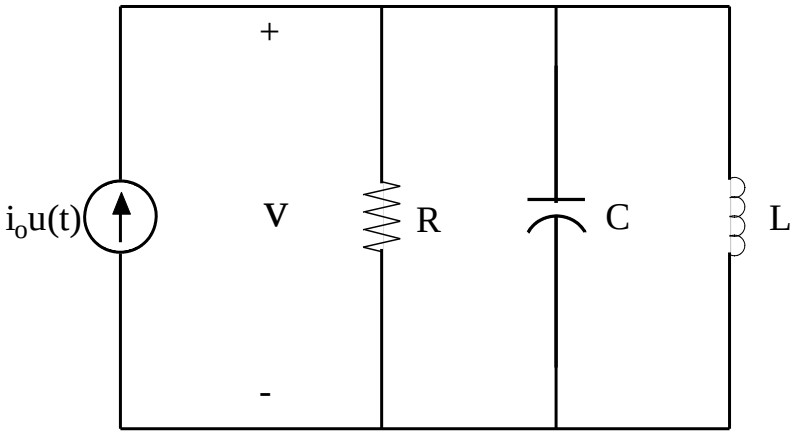

Result: Inductor Current Equation

$$\frac{\partial^2 i_L}{\partial t^2} + \underbrace{\left(\frac{1}{RC}\right)}_{\equiv 2\alpha}\frac{\partial i_L}{\partial t} + \underbrace{\left(\frac{1}{LC}\right)}_{\equiv \omega_0^2} i_L = \left(\frac{1}{LC}\right) i_0(t)$$

3 Numerical Cases

$i_0(t) = (1A)u(t) \quad L = 1\mu H \;\; C = 1\mu F$

$\omega_0 = 10^6 r/s$

$R_1 = 0.25\Omega \quad \alpha = 2x10^6 \;\; Overdamped \;\; s_1 = -\left(\sqrt{3}-1\right)x10^6 s^{-1},\; s_2 = -\left(\sqrt{3}+1\right)x10^6 s^{-1}$

$i_L(t) = 1A + A_1 e^{s_1 t} + A_2 e^{s_2 t}$

$R_2 = 0.5\Omega \quad \alpha = 1x10^6 \;\; Critically\ damped$

$i_L(t) = 1A + (A_1 + A_2 t)e^{-\alpha t}$

$R_3 = 1\Omega \quad \alpha = 5x10^5 \;\; Underdamped \;\; \omega_d = \sqrt{3}x10^6 s^{-1}$

$i_L(t) = 1A + \left[B_1 \cos(\omega_d t) + B_2 \sin(\omega_d t)\right]e^{-\alpha t}$

Result: Capacitor Voltage Equation

$$\frac{\partial^2 V_C}{\partial t^2} + \underbrace{\left(\frac{1}{RC}\right)}_{\equiv 2\alpha}\frac{\partial V_C}{\partial t} + \underbrace{\left(\frac{1}{LC}\right)}_{\equiv \omega_0^2} V_C = \left(\frac{1}{C}\right)\frac{\partial i_0(t)}{\partial t}$$

3 Numerical Cases

$i_0(t) = (1A)u(t) \quad L = 1\mu H \;\; C = 1\mu F$

$\omega_0 = 10^6 r/s$

$R_1 = 0.25\Omega \quad \alpha = 2x10^6 \;\; Overdamped \;\; s_1 = -\left(\sqrt{3}-1\right)x10^6 s^{-1},\; s_2 = -\left(\sqrt{3}+1\right)x10^6 s^{-1}$

$V_C(t) = A_1 e^{s_1 t} + A_2 e^{s_2 t}$

$R_2 = 0.5\Omega \quad \alpha = 1x10^6 \;\; Critically\ damped$

$V_C(t) = (A_1 + A_2 t)e^{-\alpha t}$

$R_3 = 1\Omega \quad \alpha = 5x10^5 \;\; Underdamped \;\; \omega_d = \sqrt{3}x10^6 s^{-1}$

$V_C(t) = \left[B_1 \cos(\omega_d t) + B_2 \sin(\omega_d t)\right]e^{-\alpha t}$

Parallel RLC: Match Initial Conditions

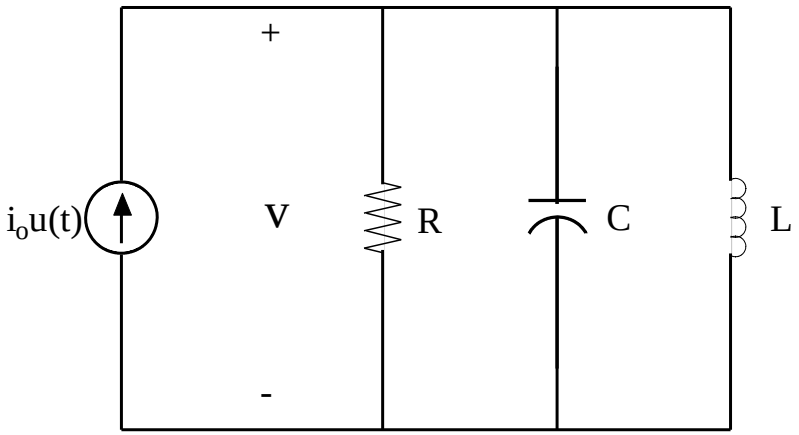

Parallel RLC: Match Initial Conditions

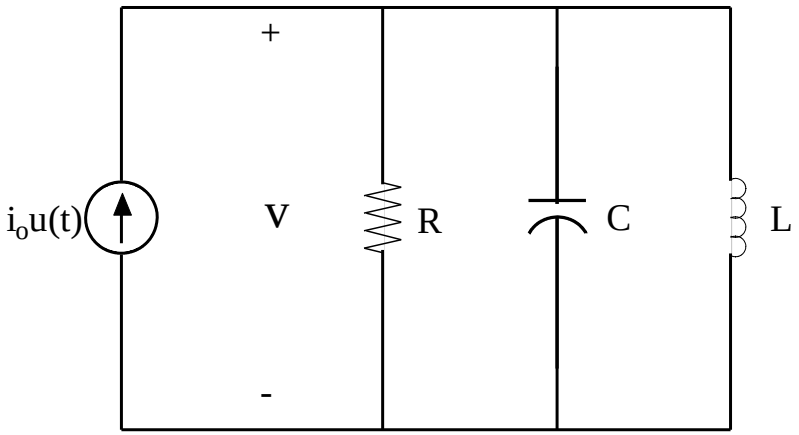

Parallel & Series Summary

$$General\ Form:$$

$$\frac{\partial^2 y}{\partial t^2} + 2\alpha \frac{\partial y}{\partial t} + \omega_0^2 y = f(t)$$

$$\alpha \equiv \begin{Bmatrix} \left(\frac{R}{2L}\right) Series \\ \left(\frac{1}{2RC}\right) Parallel \end{Bmatrix}$$

$$\omega_0^2 \equiv \left(\frac{1}{LC}\right) Series\ \&\ Parallel$$

$$s_{1,2} = -\alpha \pm \left[\alpha^2 - \omega_0^2\right]^{1/2} = -\alpha \pm j\omega_d$$

$$\omega_d = \left[\omega_0^2 - \alpha^2\right]^{1/2}$$

$$y = y_p(t) + y_n(t)$$

$$y_n(t) = \begin{Bmatrix} A_1 e^{s_1 t} + A_2 e^{s_2 t} & \alpha > \omega_0\ Overdamped \\ (A_1 + A_2 t)e^{-\alpha t} & \alpha = \omega_0\ Critically\ damped \\ \left[B_1 \cos(\omega_d t) + B_2 \sin(\omega_d t)\right] e^{-\alpha t} & \alpha < \omega_0\ Underdamped \end{Bmatrix}$$

SUPPLEMENTAL NOTES: A GENERAL APPROACH TO RELATING INITIAL CONDITION INFORMATION IN SOC'S AND HIGHER ORDER CIRCUITS

© Fred Terry
EECS 215 Winter, 2010

Relating Initial Conditions

- For SOC problems, if we can find $V_c(0^+)$ and $i_c(0^+)$ {for $V_c(t)$ problems} or $i_L(0^+)$ and $V_L(0^+)$ {for $i_L(t)$ problems} then we are in great shape
- Usually, we have $V_c(0^+)$ & $i_L(0^+)$ {for RLC problems, for SOC's with 2 C's or 2 L's we will have an analogous situation}
- To get the quantity we want, we only have to do DC-style circuit analysis at $t = 0^+$

Example

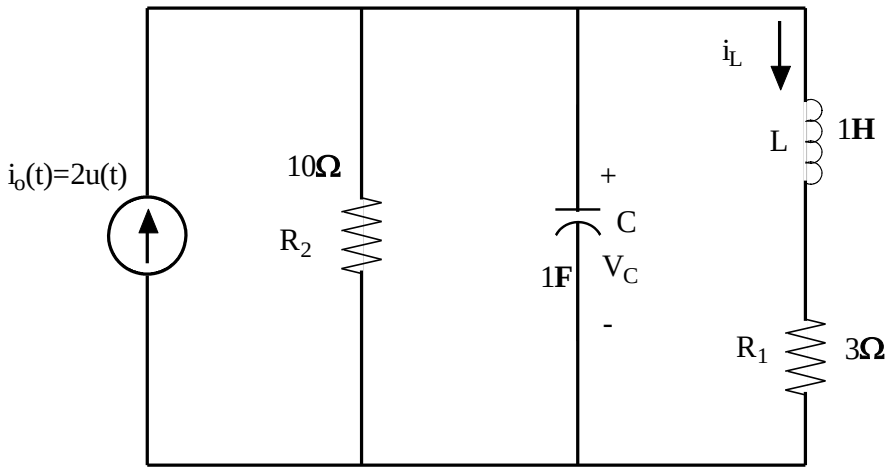

Suppose we have the initial (boundary) conditions:

$$i_L(0^+) = i_L(0^-) = 5A$$

$$V_c(0^+) = V_c(0^-) = 1V$$

How do we get $i_c(0^+)$ and/or $V_L(0^+)$?

Draw $t=0^+$ Circuit

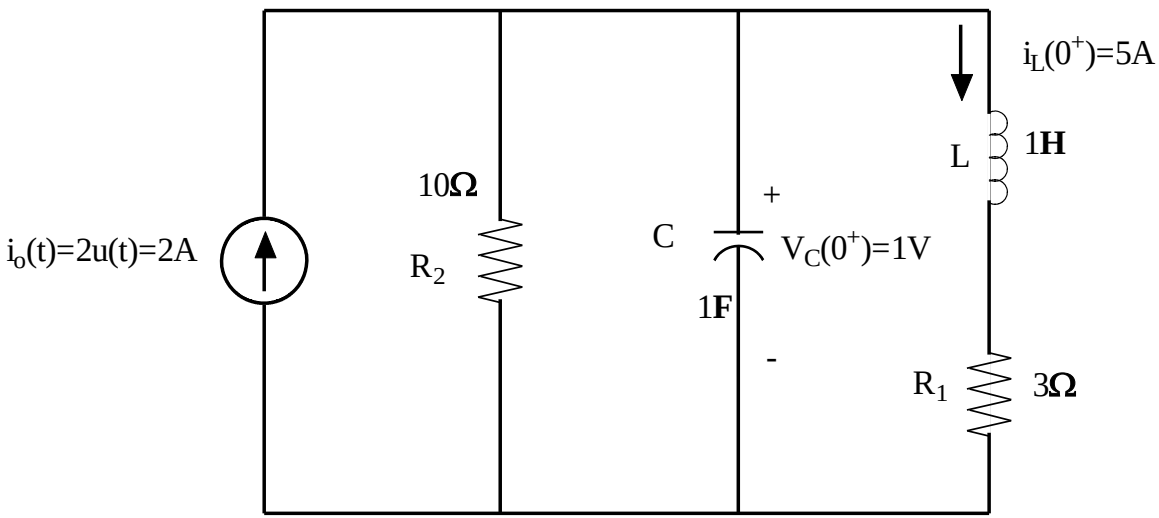

- $V_c(0^+)$ fixed but $i_c(0^+)$ can be anything (as required by the circuit)
- $i_L(0^+)$ is fixed but $V_L(0^+)$ can be anything (as required by the circuit)

Draw $t=0^+$ Circuit

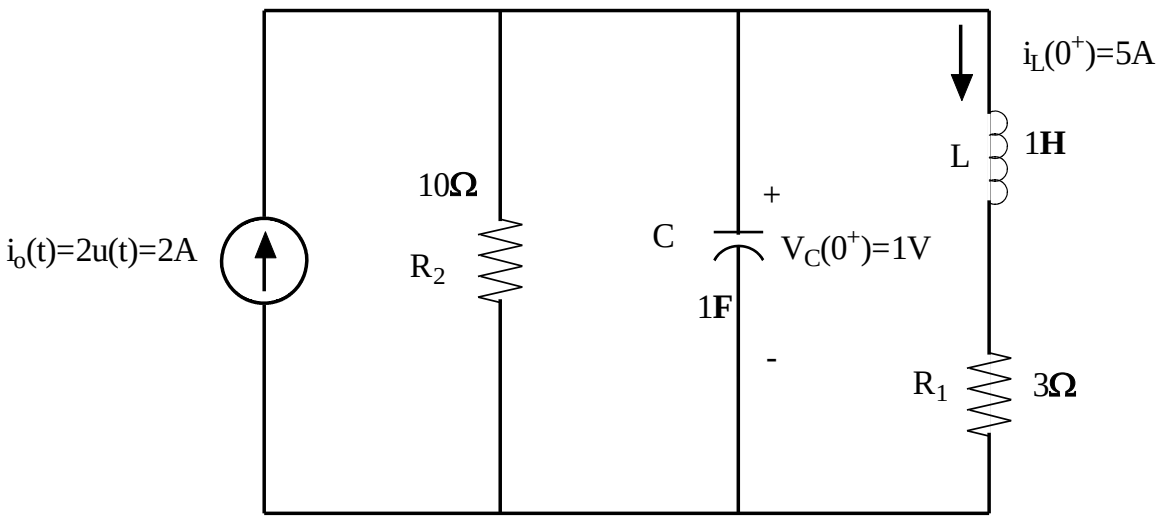

- $V_c(0^+)$ fixed but $i_c(0^+)$ can be anything (as required by the circuit)→Replace C by V-source in $t=0^+$ circuit model
- $i_L(0^+)$ is fixed but $V_L(0^+)$ can be anything (as required by the circuit) →Replace L by I-source in $t=0^+$ circuit model
- REPLACEMENT ONLY WORKS FOR $t=0^+$!!!!!

Draw $t=0^+$ Circuit

Now Do Nodal, Mesh, or KVL/KCL to find the missing stuff $i_c(0^+)$,$V_L(0+)$

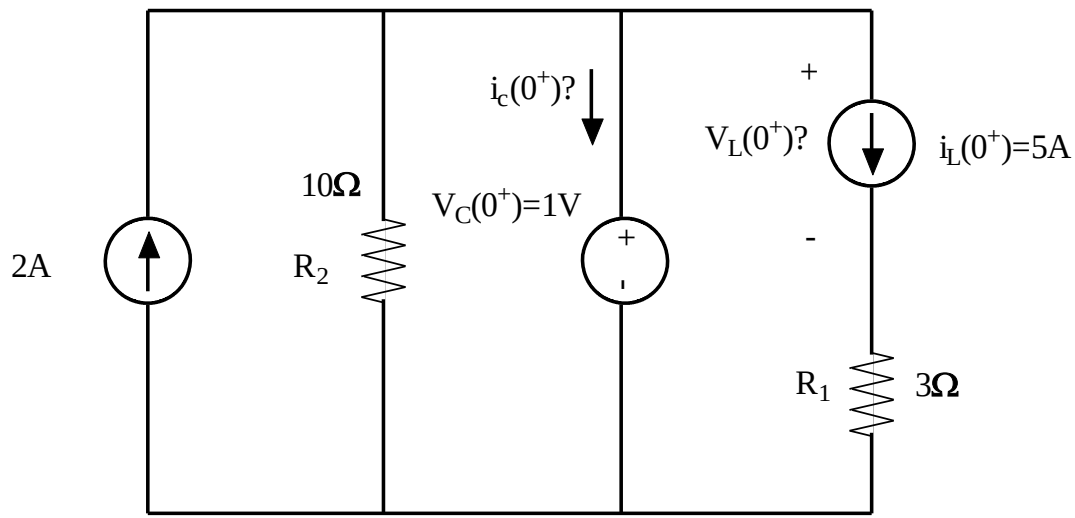
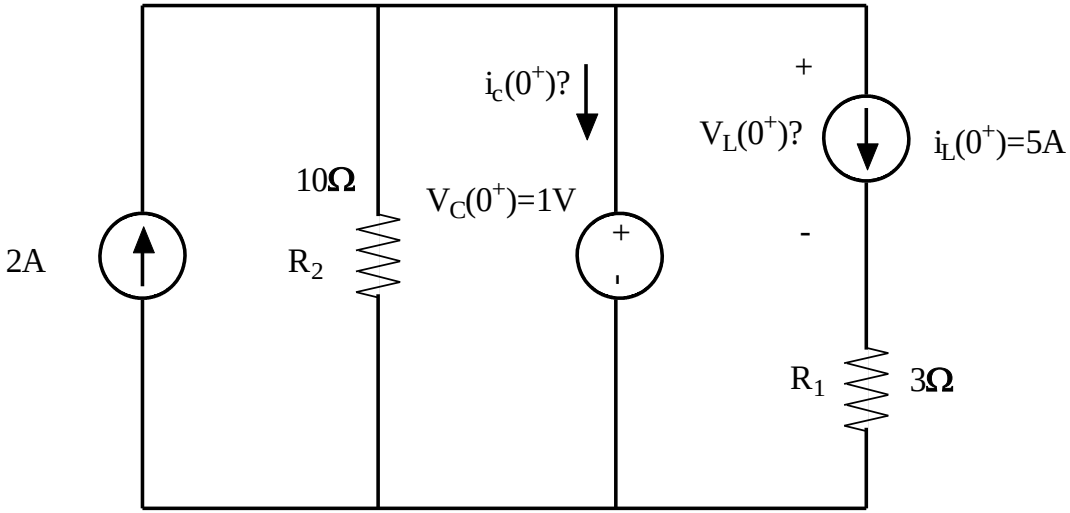
$t=0^+$ Nodal Analysis