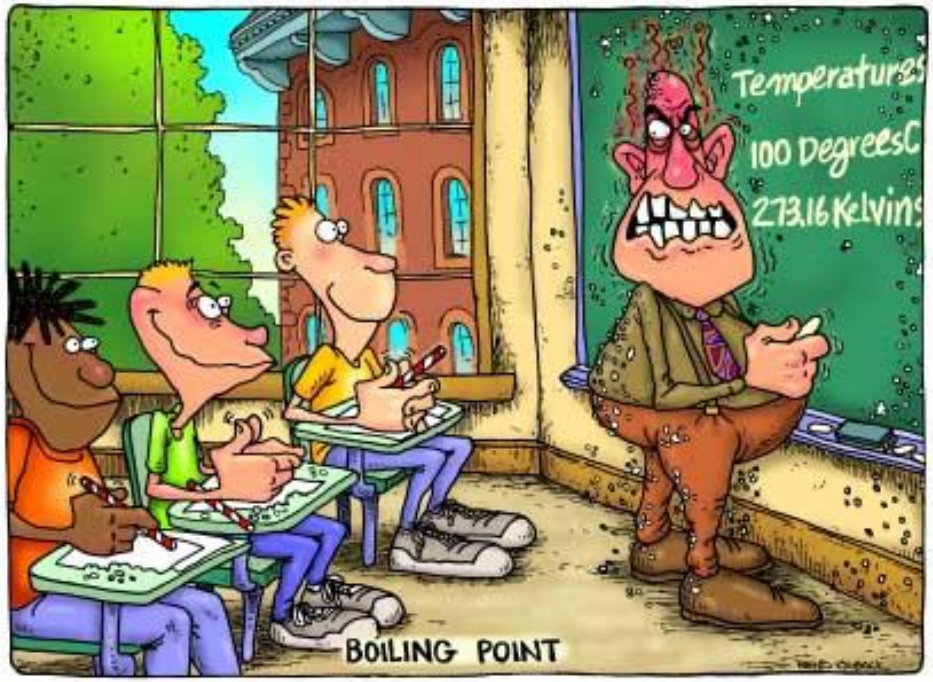

MAXIMUM POWER TRANSFER THEOREM AND BIPOLAR JUNCTION TRANSISTORS

© Fred Terry
Winter, 2010

Motivation

- All "Real" Sources Have Output Resistance
- What Is the Maximum Amount of Power That Can Be Delivered From a Real Source to A Load?

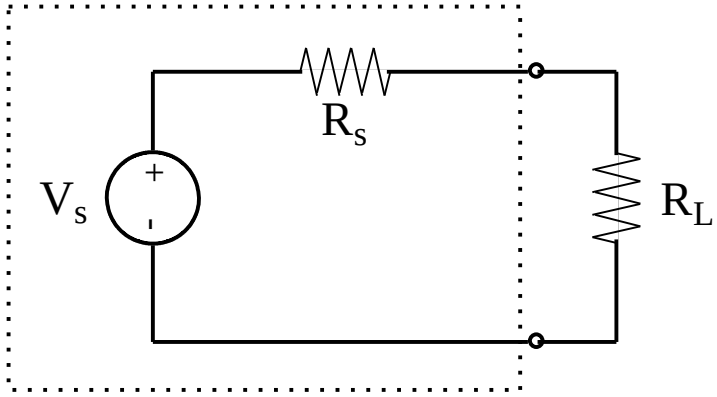

Maximum Power Transfer Theorem

- We can reduce any linear circuit with 2 output terminals to a Thevenin (or Norton Equivalent)
- If we connect a resistive load, R_L, maximum power is delivered to the load when $R_L = R_{TH} = R_{eq}$
- At this condition,

$$P_L = \left[\frac{V_{TH}^2}{4R_{TH}} \right] = \left[\frac{R_N I_N^2}{4} \right]$$

Proof

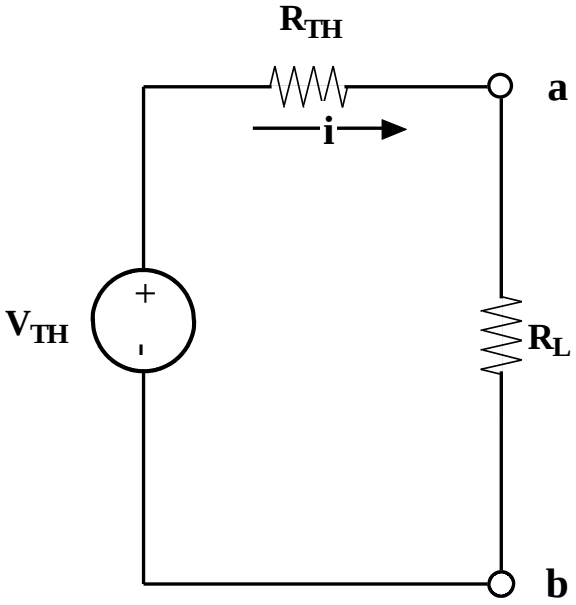

$$i = V_{TH} \big/ \left(R_{TH} + R_L \right)$$

$$P_L = Vab \bullet i = iR_L \bullet i = i^2 R_L$$

$$P_L = \frac{V_{TH}^2 R_L}{\left(R_{TH} + R_L \right)^2}$$

Maximize vs. R_L

$$\left(\frac{\partial P_L}{\partial R_L} \right) = 0 = V_{TH}^2 \left[\frac{1}{\left(R_{TH} + R_L \right)^2} - \frac{2R_L}{\left(R_{TH} + R_L \right)^3} \right]$$

$$\rightarrow 0 = \left(R_{TH} + R_L \right) - 2R_L$$

$$\rightarrow R_L = R_{TH}$$

$$p_{\max} = \left(P_L \right)_{R_L = R_{TH}} = \left[\frac{V_{TH}^2 R_{TH}}{\left(R_{TH} + R_{TH} \right)^2} \right] = \left[\frac{V_{TH}^2}{4R_{TH}} \right]$$

Intuitive

- If $R_L=0$ then the ***LOAD*** dissipates no power
  - Note this is the condition where the internal source delivers maximum power, but nothing is getting to the load!
- If $R_L=\infty$ then $i=0$ and again the ***LOAD*** dissipates no power
- So Max is somewhere in between

Normalize Plot

- R_L normalized to R_{TH}
- P_L Normalized to V^2_{TH}/R_{TH}
- Note that Physics Is Especially Cruel in The Case of $R_L<R_{TH}$

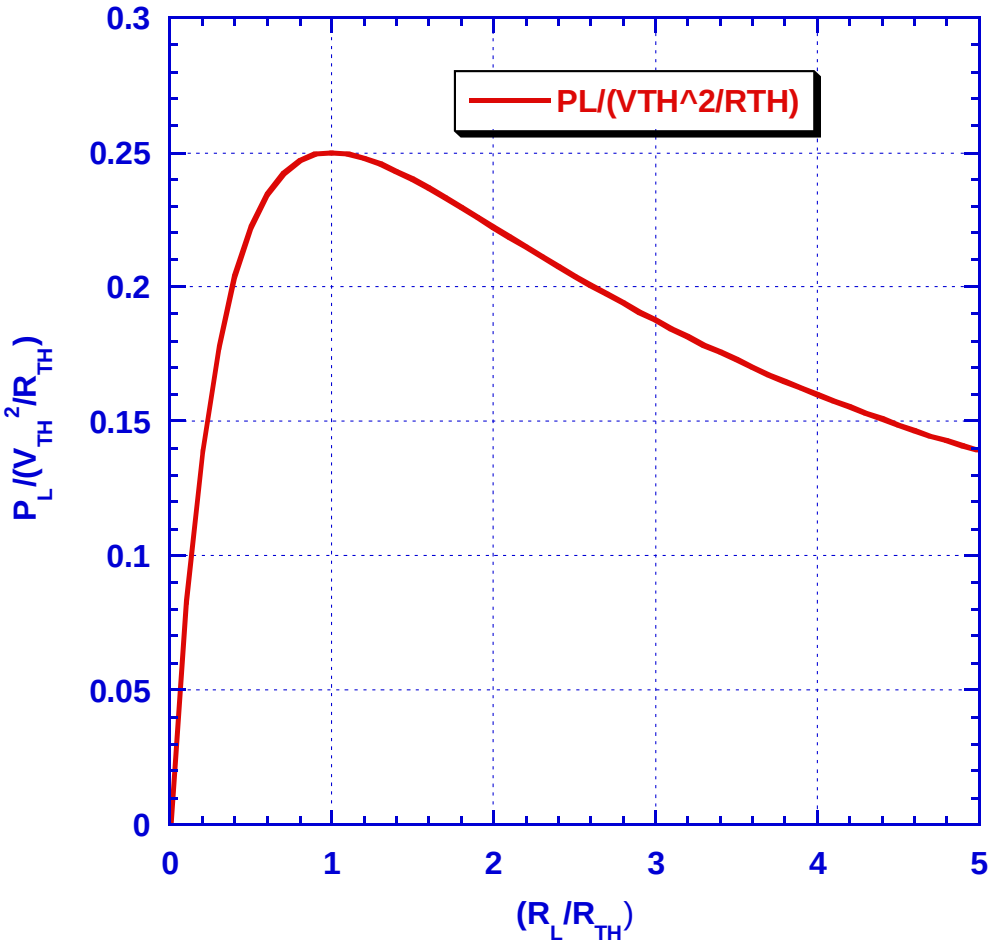

Power Efficiency

$$\left(\frac{P_L}{P_{total}}\right) = \left[\frac{i^2 R_L}{i^2\left(R_L + R_{TH}\right)}\right]$$

$$= \left[\frac{R_L}{R_L + R_{TH}}\right]$$

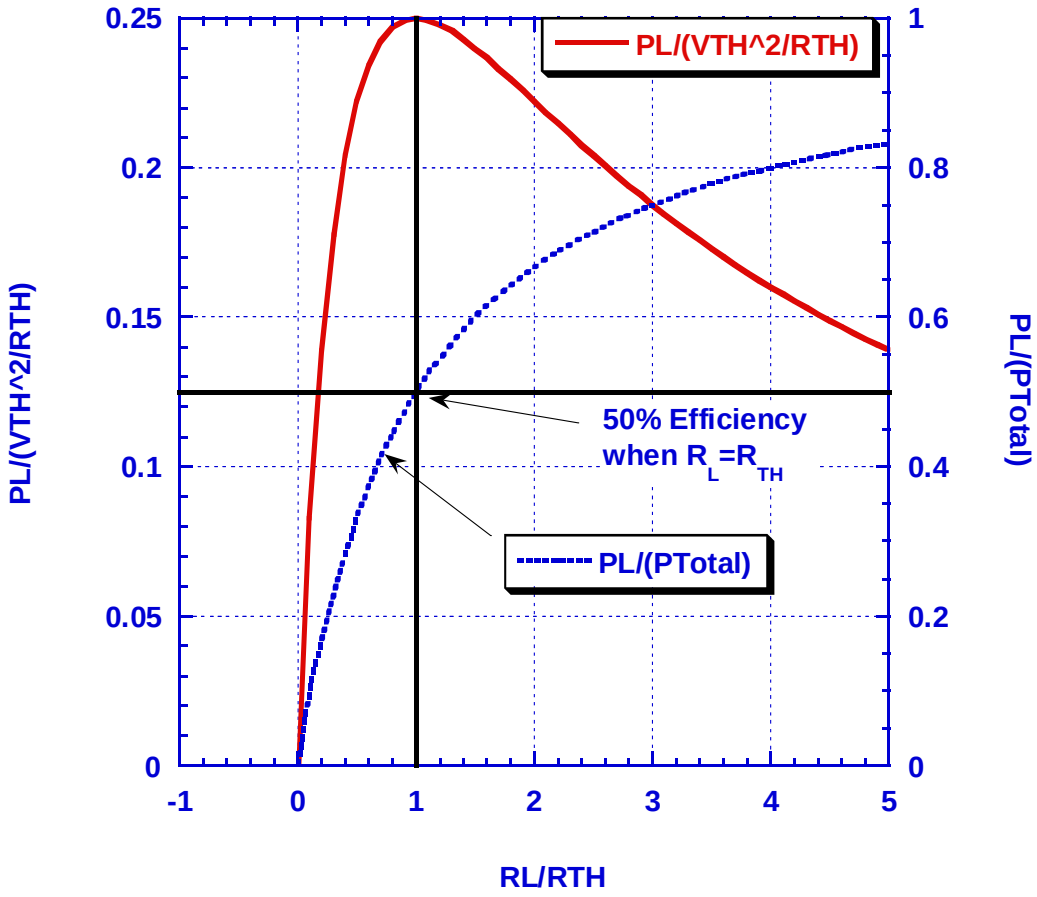

Comments

- The Most Interesting Cases of Maximum Power Transfer Problem Occur for AC Circuits (later in class)
- Nonlinear Power Example: Solar Cell
- Low Frequency Example: Bipolar Common Collector Buffer

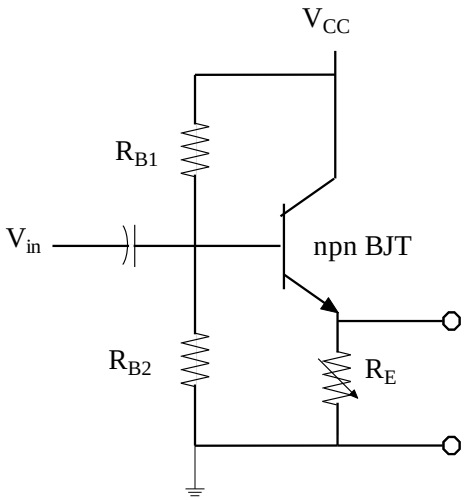

Solar Cell Max Power

- A Solar Cell Is Just a Semiconductor Diode Under Illumination (sun light). It Convert Optical Energy Inot Electrical Energy
- We Want To Maximize $|P_D|=|I_D V_D|$ When $P_D<0$ (Solar Cell Delivering Power)
- Model:

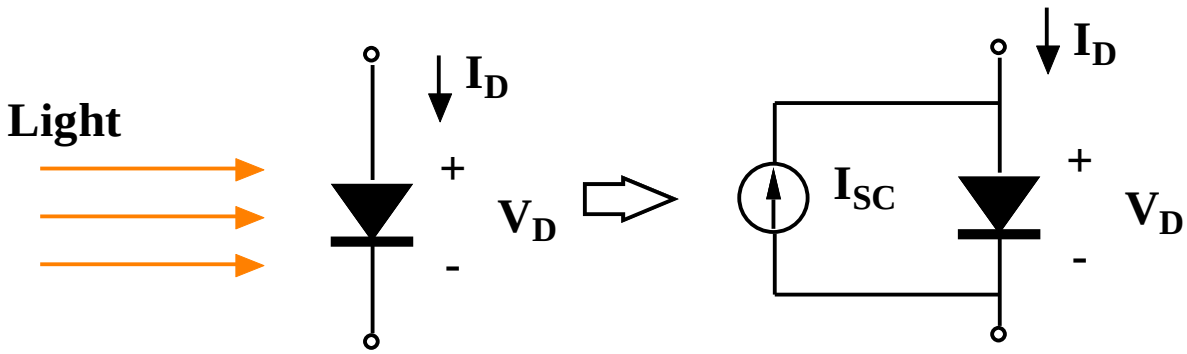

$$I_D = I_0\left(e^{V_D/v_{th}} - 1\right) - I_{SC}$$

Solar Cell Equations

$$I_D = I_0\left(e^{V_D/v_{th}} - 1\right) - I_{SC}$$

$$V_{oc} = v_{th}\ln\left(\frac{I_{SC}}{I_0} + 1\right)$$

$$P_D = I_D V_D = V_D I_0\left(e^{V_D/v_{th}} - 1\right) - V_D I_{SC}$$

$$\frac{\partial P_D}{\partial V_D} = 0 = I_0\left(\left(1 + V_D / v_{th}\right)e^{V_D/v_{th}} - 1\right) - I_{SC}$$

Solar Cell Plot 1

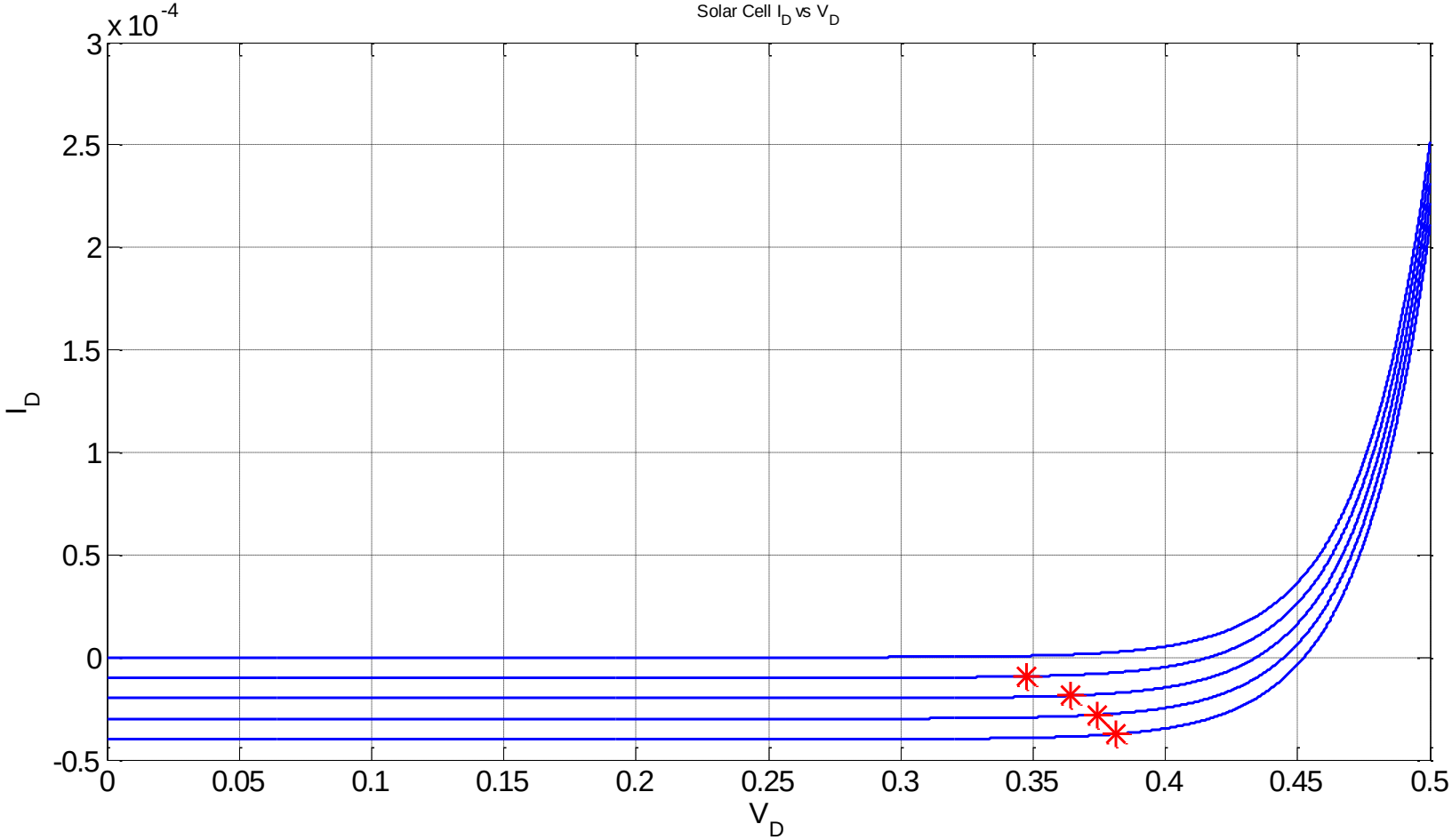

Solar Cell Plot 2

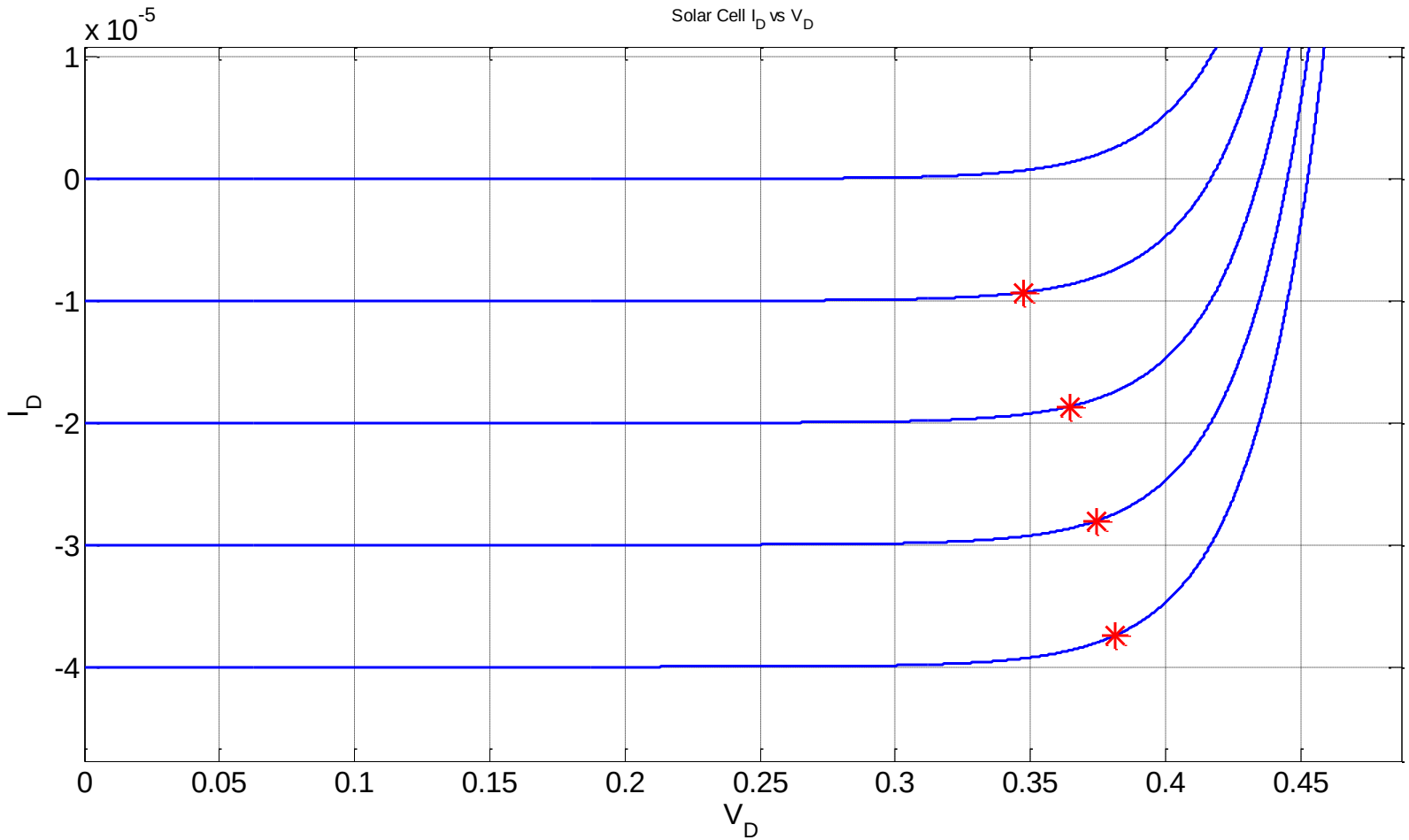

Bipolar Junction Transistor (BJT)

- One of the first practical semiconductor devices with gain
- Act like a control valve. A small current into the control (base) terminal controls a large current flow through the high (collector) terminal
- Two major types npn & pnp (opposite polarity)

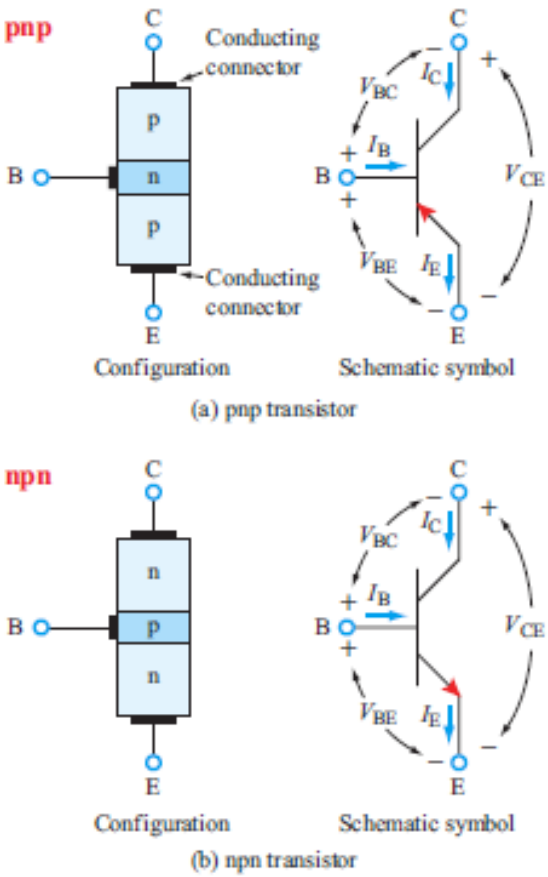

Figure 3-27: Configurations and symbols for (a) pnp and (b) npn transistors.

NPN in Forward Active Mode

- Forward Active Mode: $V_{BE}>0$, $V_{CB}>0$
- Low Frequency Model

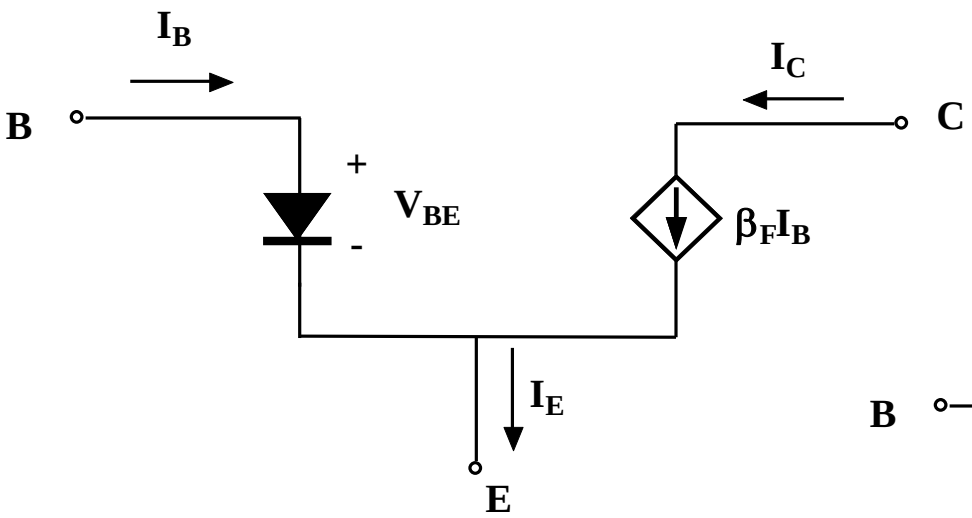

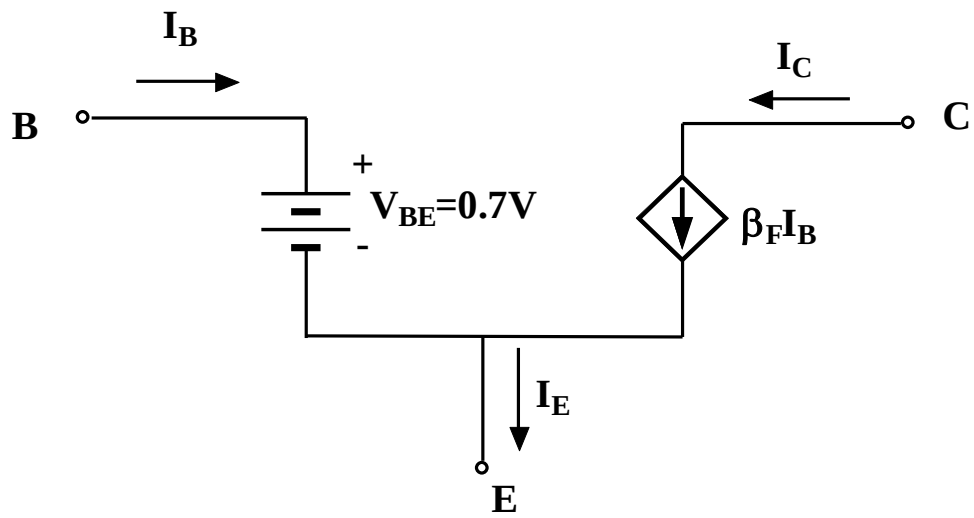

Simple Amplifier and Inverter

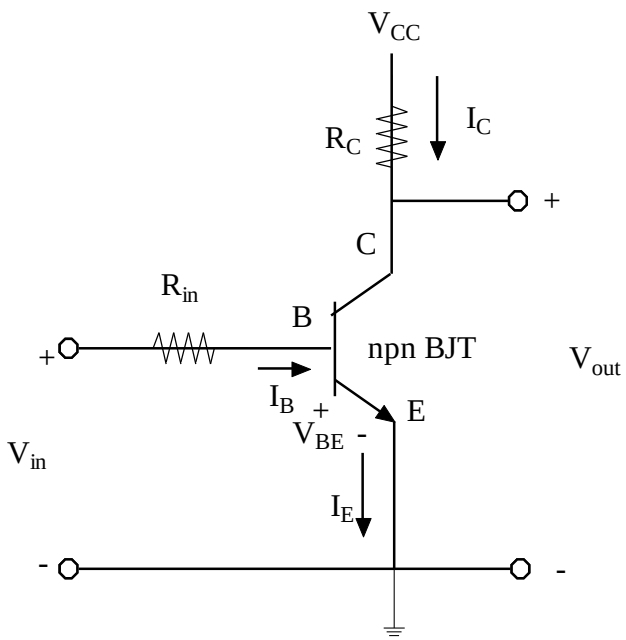

Simple Amplifier and Inverter

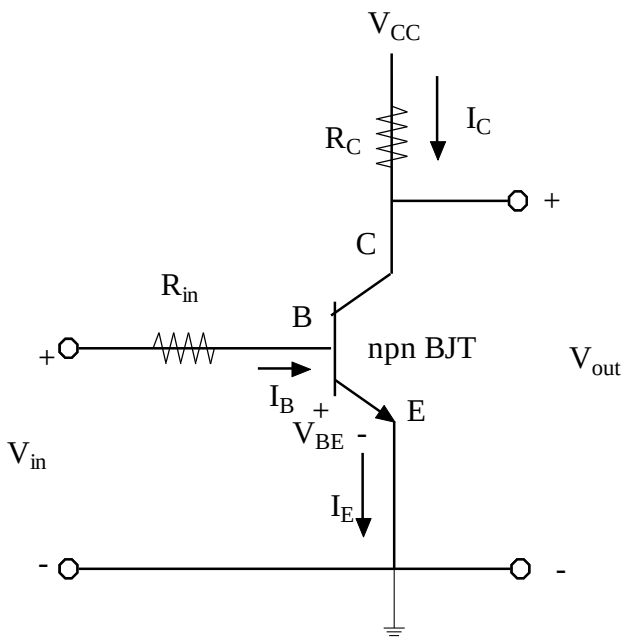

Common Collector Amp

Circuit

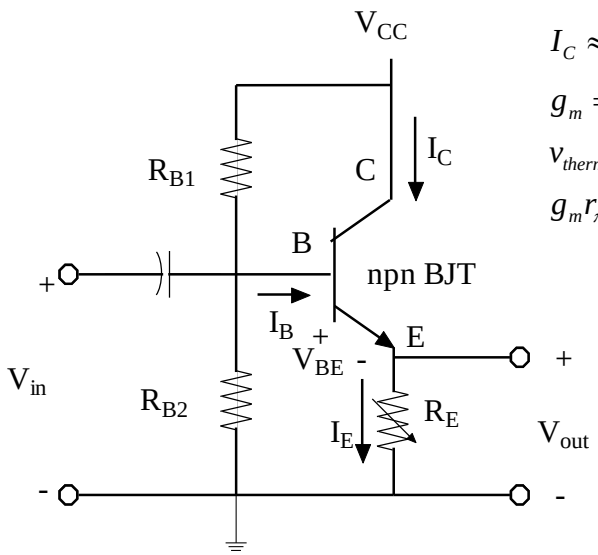

$$I_C \approx I_0\left(e^{V_{BE}/v_{thermal}} - 1\right)$$

$$g_m = \left(I_C / v_{thermal}\right)$$

$$v_{thermal} = k_B T / q \approx 25.8mV$$

$$g_m r_\pi = \beta = \left(I_C / I_B\right) \sim 100$$

Low Frequency AC Model

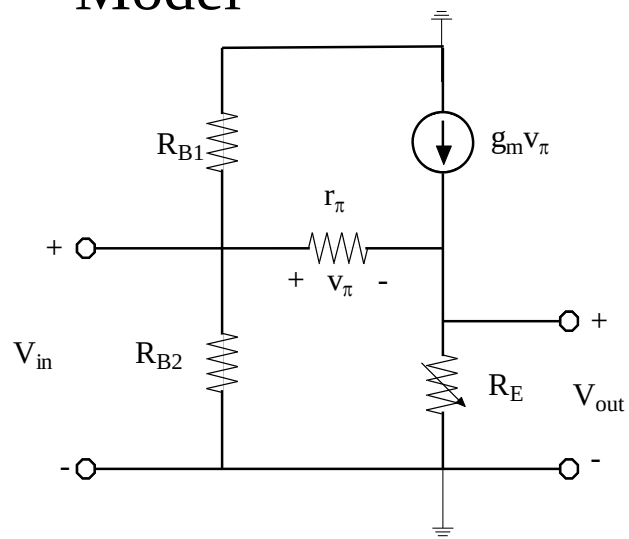

Verify:

$$\left(V_{out}/V_{in}\right) = \left[\frac{(\beta+1)R_E}{(\beta+1)R_E + r_\pi}\right] \approx 1$$

$$R_{TH} = \left[\frac{R_E r_\pi}{(\beta+1)R_E + r_\pi}\right]$$

$$= \left[\frac{R_E}{(1+1/\beta)g_m R_E + 1}\right]$$

Adjust Output Equivalent Resistance R_{TH} by Choice of I_C&R_E