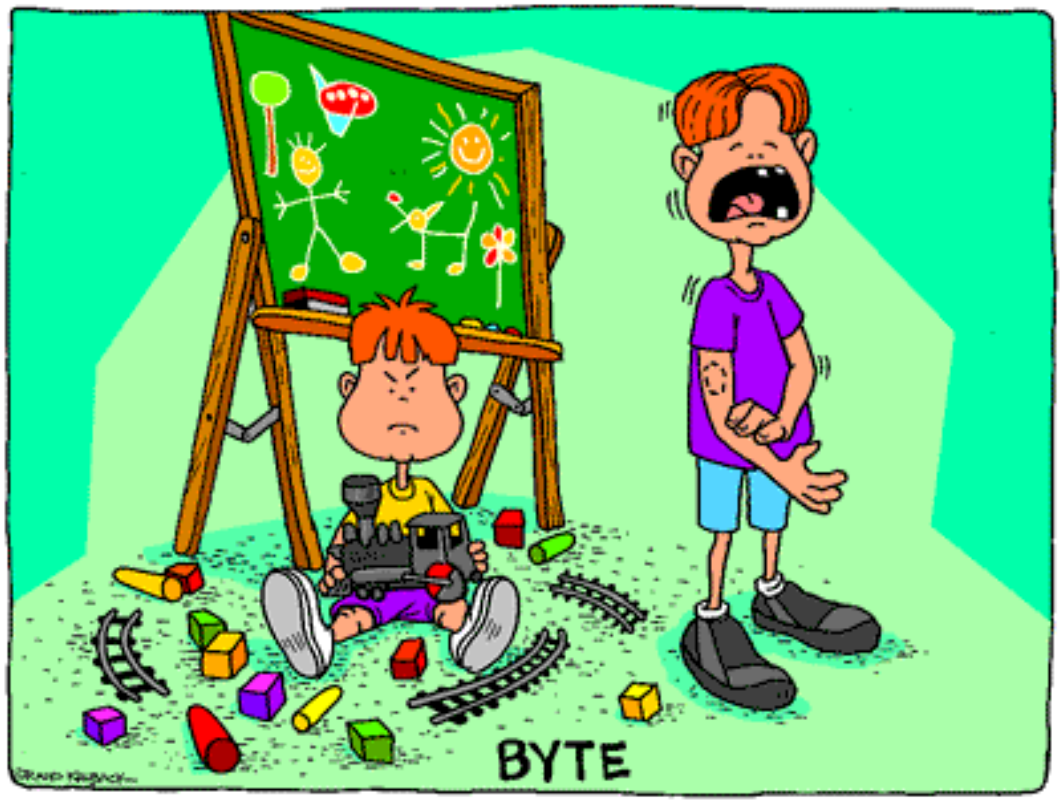

TRANSISTOR CONCEPTS & MOSFETS

© Fred Terry
Winter, 2010

Transistors Circuits: Key Concepts I

- Transistors Are 3 or 4 Terminal Devices Built from Semiconductors & Are The Building Block of Modern Analog, Digital, and Mixed Signal Integrated Circuits
- Key Idea Follows From 3 Terminal Structure: Current Flow From One Terminal to a Second is Controlled By A Small Amount of Power at the Third
- ***Control Valves for Current Flow***

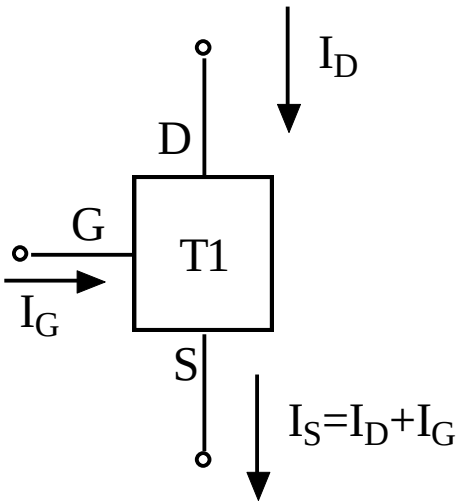

$$I_G \ll I_D$$

$$Controlling\ Power \ll Controlled\ Power$$

$$V_{GS} I_G \ll V_{DS} I_D$$

Our Objectives

- Understanding How These Elements (Transistors) Are Useful in Basic Analog Amplification and Digital Circuits
  - Some Basic Useful Circuit Topologies
  - How Does 215-Style Linear Circuit Analysis Help?
  - Brief Look At How Do We Deal with Nonlinearities
- Analog: Bias/Operating Points & Small Signal Amplification
- Digital: How Device Limitations/Nonlinearities Yield Digital Circuits
- What Circuit Effects Lead to Speed/Frequency Response Limitations (Later in Class)

Not Our Objectives

- Explaining *HOW* Transistors Accomplish Current Control: Big Part of EECS 320
- Dealing with All the Details
  - Important but 2nd Order Complications in Real Transistors
  - Clever Topologies to Improve Performance
  - Optimization for Real Applications
  - These Are Necessary to Become a Good Practicing Designer and Are the Subjects of EECS 311 (Analog) and EECS 312 (Digital) and following classes

Our Approach

- Look at Examples of Real Transistors & Circuits
- Idealize the Model of the Transistor to Capture the Major Ideas
- Introduce Physical Limitations That Really Matter at the Circuit/Concept Level
- Look at Useful Circuits with Idealized Devices
- Leave Details for Later Classes

Some Types of Transistors

- Bipolar Junction Transistors (BJT's)
  - npn & pnp
- Junction Field Effect Transistors (JFET's)
  - p & n- channel
- Modulation Doped Field Effect Transistors (MODFET's)/High Electron Mobility Transistors (HEMT's)
  - p & n- channel
- **Metal Oxide Semiconductor Field Effect Transistors (MOSFET's)**
  - **p & n- channel**

Real MOSFET: Built in EECS 423

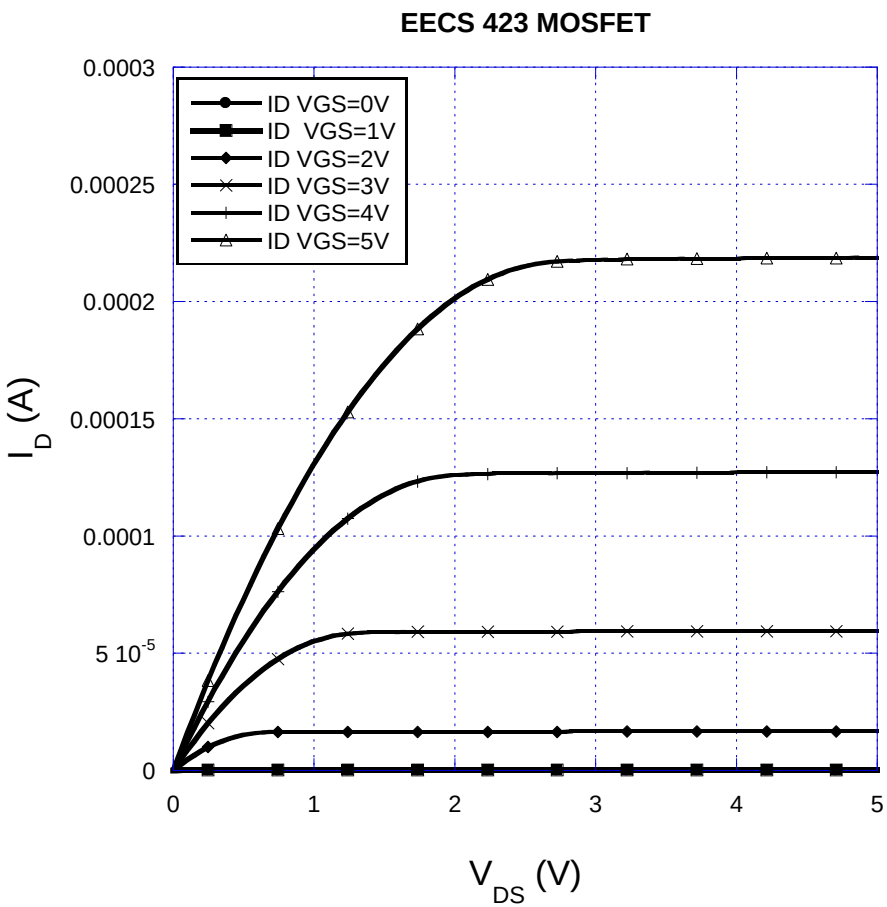

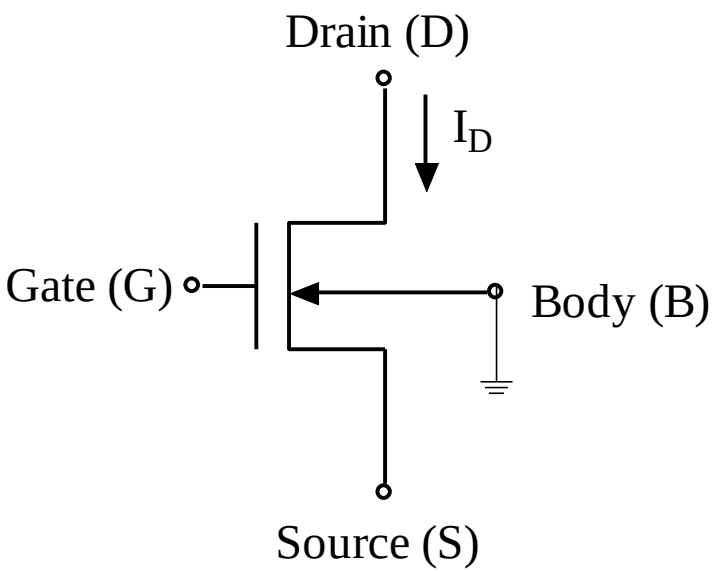

MOSFET: Approximate Model

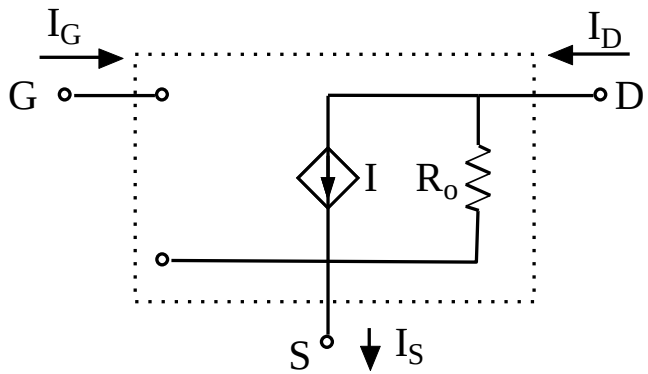

A Good Control Valve But Non-linear

$$I = function(V_{gs}, V_{ds}, V_{gb}) \quad I_D = I_S \quad I_G = 0$$

$$I = \begin{cases} K\left[(V_{GS} - V_T)V_{DS} - \frac{1}{2}V_{DS}^2\right] & if\ V_{GS} \geq V_T\ and\ V_{DS} \leq (V_{GS} - V_T) \\ \frac{1}{2}K(V_{GS} - V_T)^2 & if\ V_{GS} \geq V_T\ and\ V_{DS} \geq (V_{GS} - V_T) \\ 0 & otherwise \end{cases}$$

MOSFET (Field Effect Transistor)

Active Device: Voltage Controlled Current Source

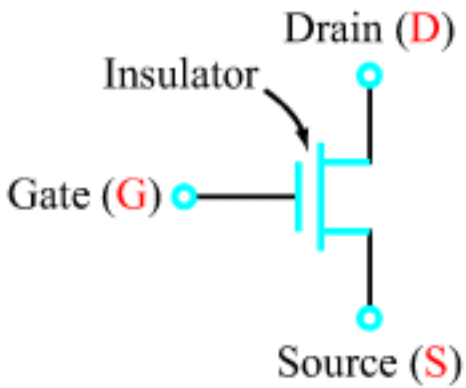

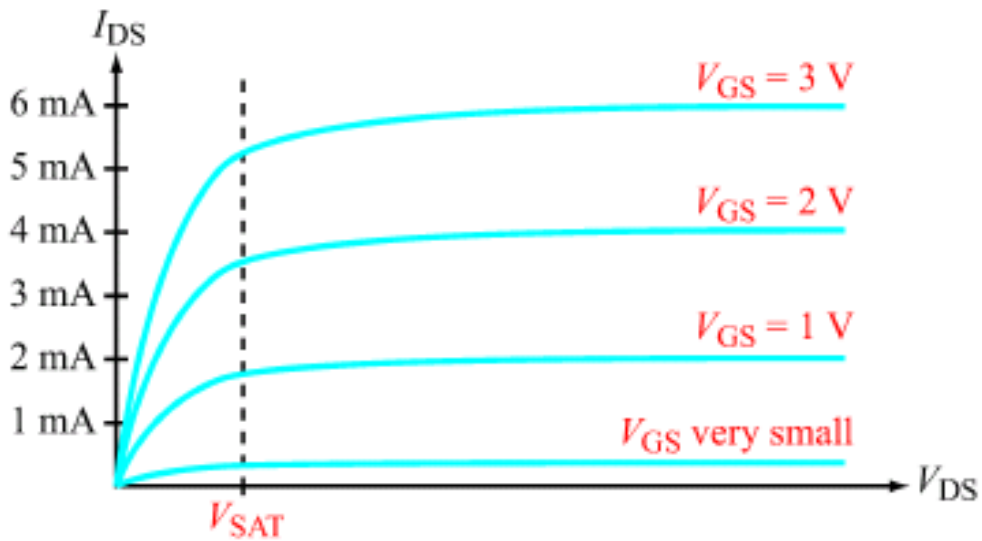

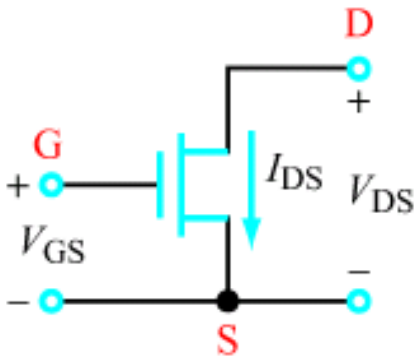

Gate voltage controls drain/source current

MOSFET Equivalent Circuit

In 215, we will generally assume constant g
(in real device, g is not constant, nonlinear)

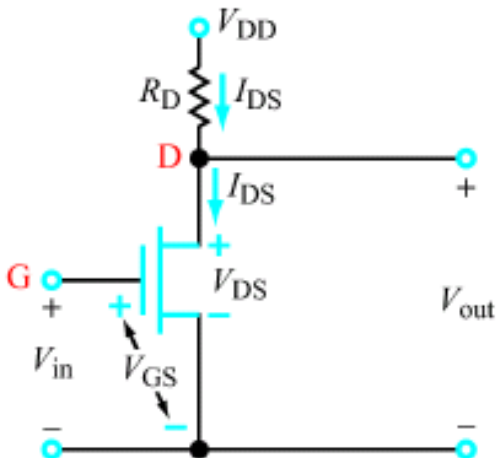

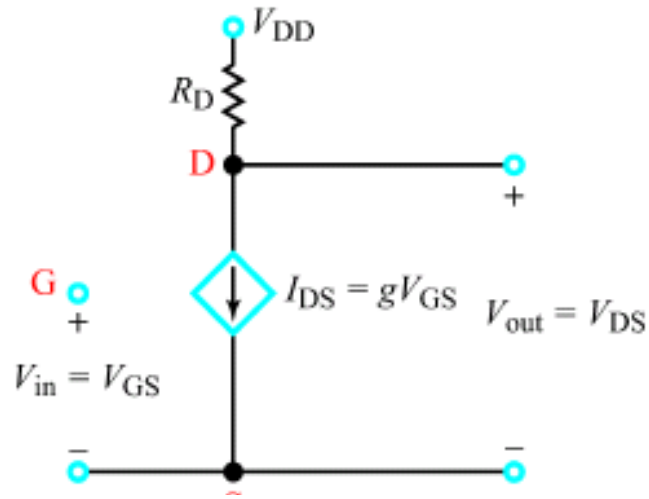

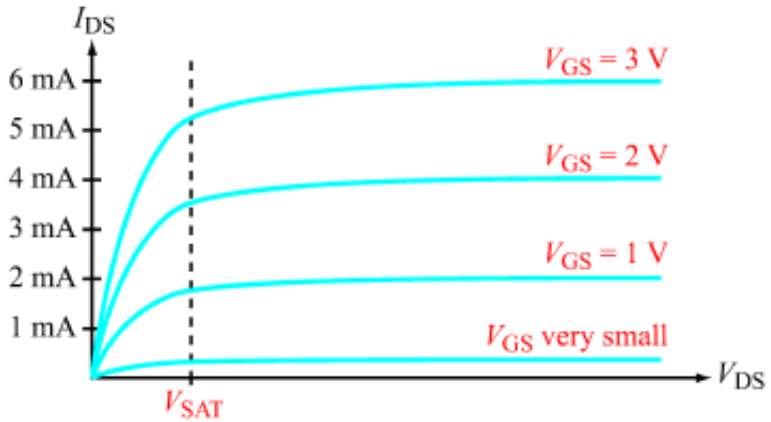

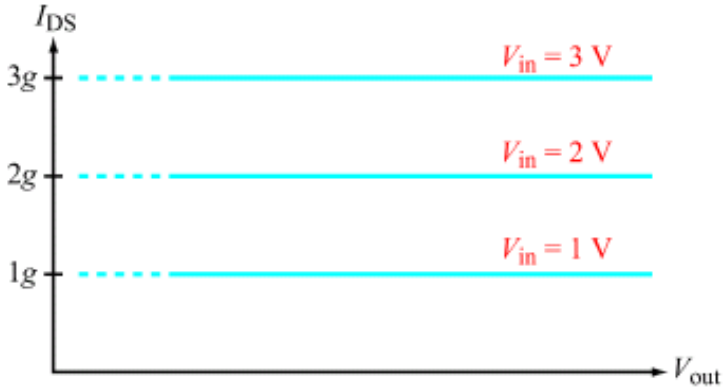

Idealized Conceptual Transistor

- The Exact Answers, Detailed Designs Depend on Having Numerically Accurate Circuit Models for the Transistors
- Key Concepts and Topologies Can Be Understood by Considering A Linear Idealized Element

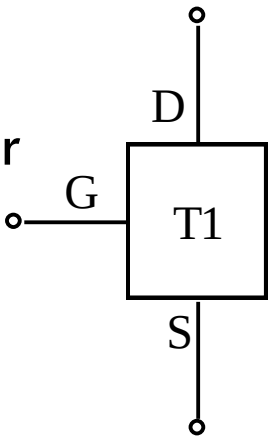

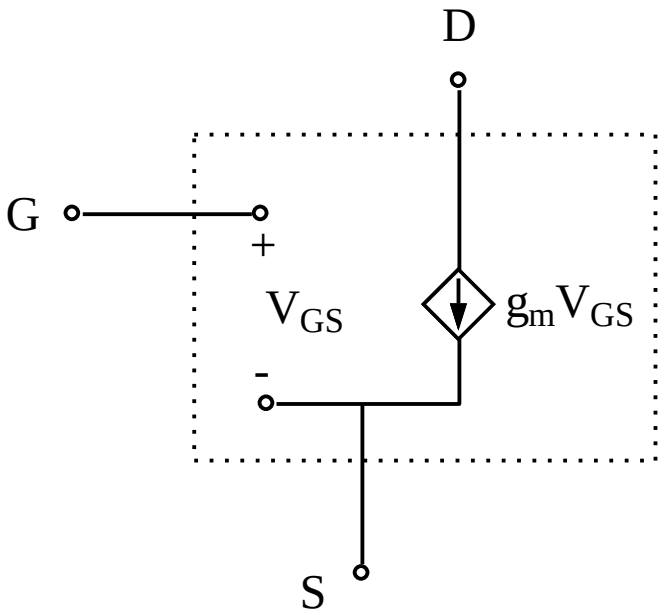

Closer to Reality: Physical Limits on Transistor

What's Really Odd About Our Idealized T1 Transistor?

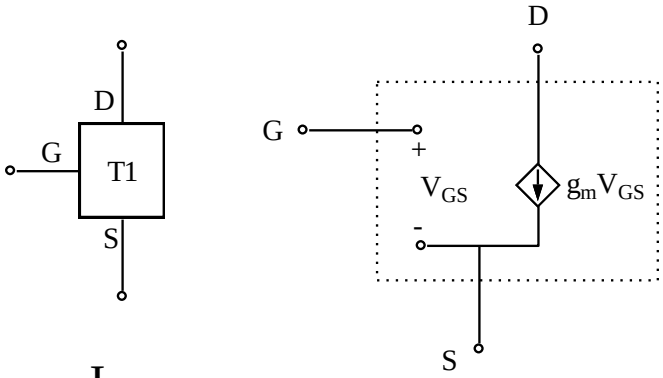

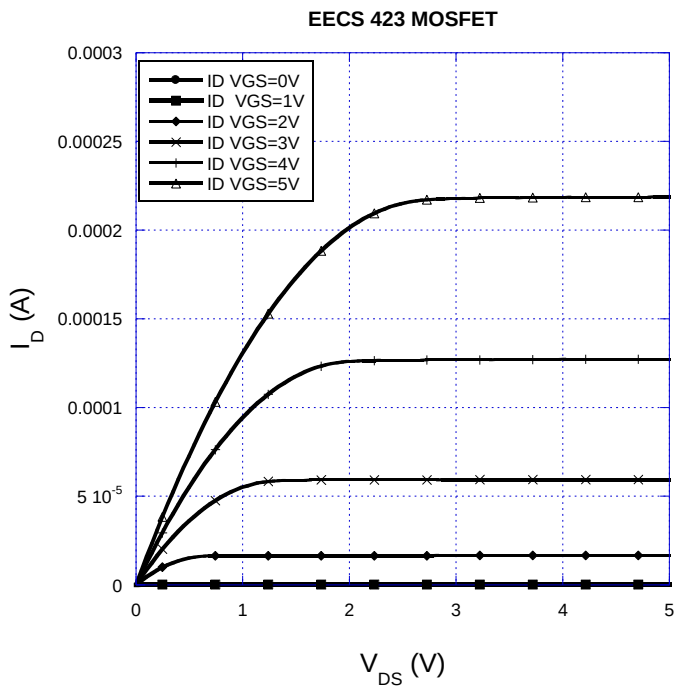

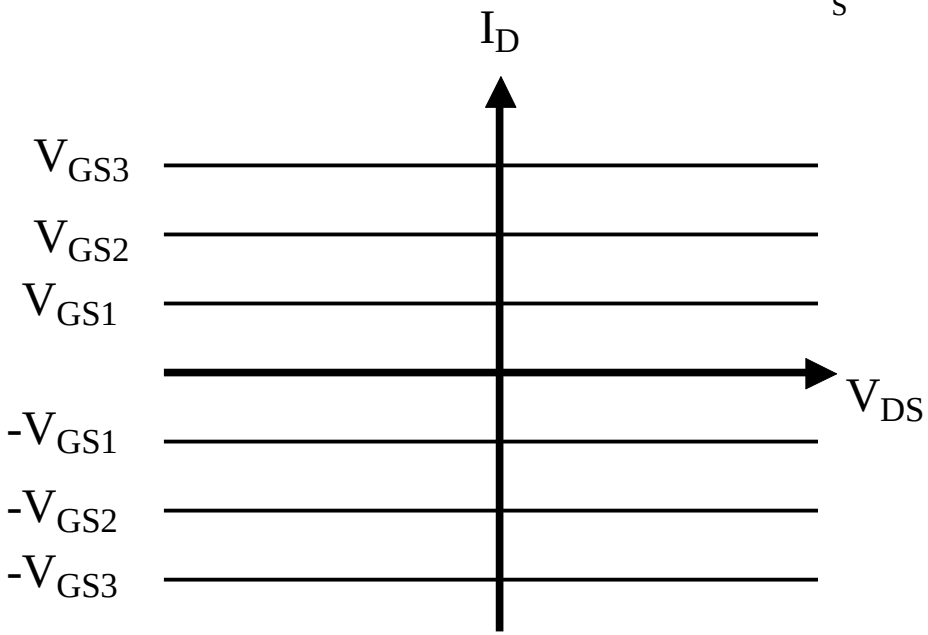

What About Power?

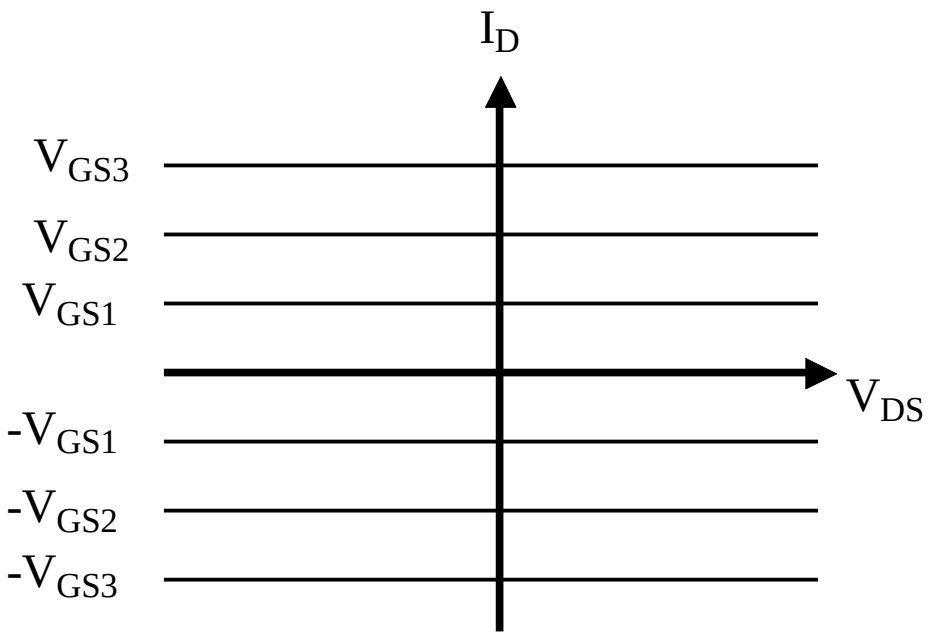

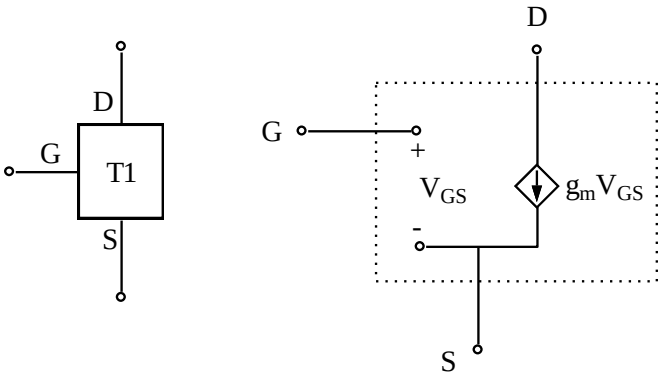

Real Transistors only <u>DISSIPATE</u> Power

Idealized Power Dissipating Transistor

$$I_D = g_m V_{gs} \;\; if \;\; I_D V_{DS} \geq 0$$

$$V_{DS} = 0 \;\; otherwise$$

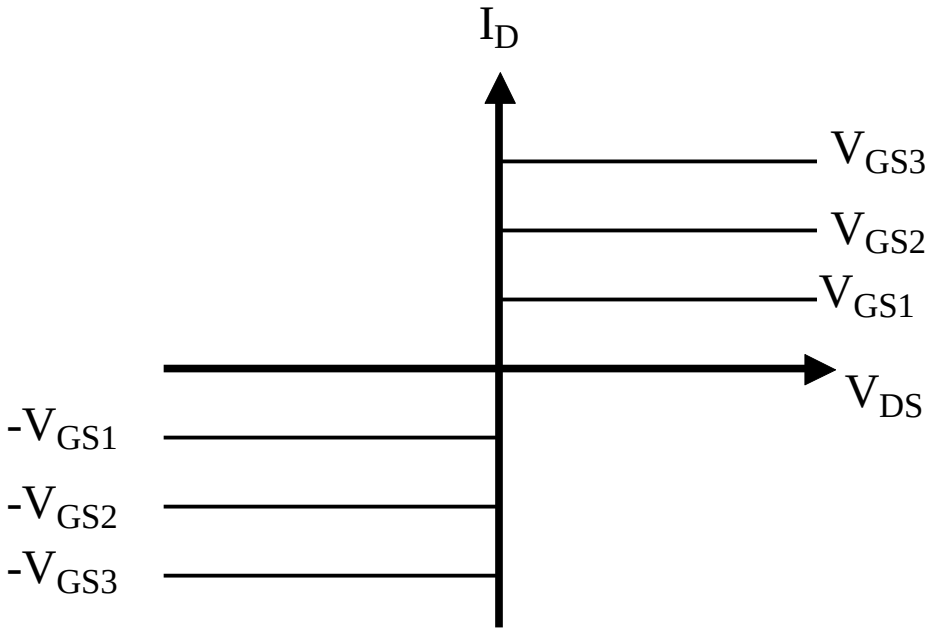

Polarity Dependent Ideal Transistor (U&M Idealized n-Channel MOSFET

$$I_D = 0 \; if \;\; V_{GS} \le 0$$

$$I_D = g_m V_{GS} \;\; if \;\; V_{GS} \ge 0 \;\&\; V_{DS} \ge 0$$

$$V_{DS} = 0 \; otherwise$$

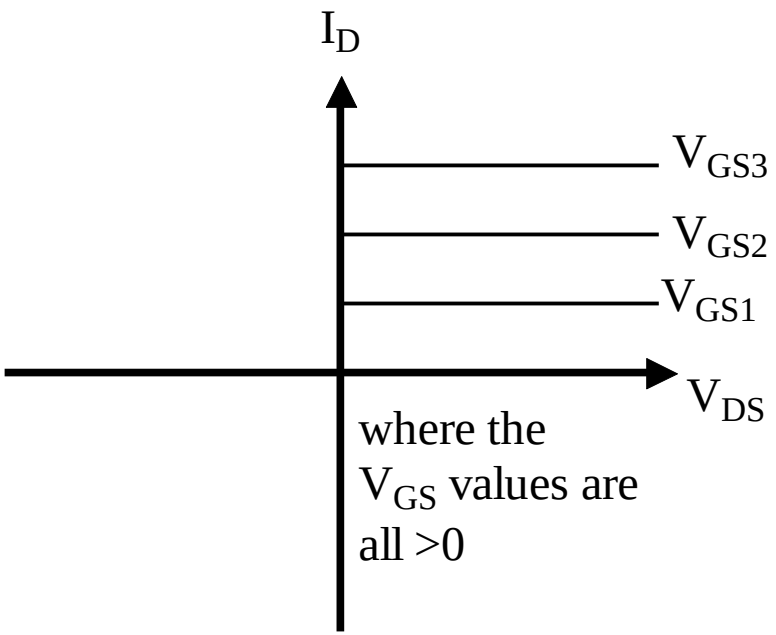

Most Transistors only operate with 1 polarity

We will call this an n-channel transistor (physics in EECS 320) and refer to it as T_n

Idealized P-channel T_p Transistor (U&M Idealized P-Channel MOSFET)

$$I_D = 0 \; if \;\; V_{GS} \geq 0$$

$$I_D = g_m V_{GS} \;\; if \;\; V_{GS} \leq 0 \;\&\; V_{DS} \leq 0$$

$$V_{DS} = 0 \; otherwise$$

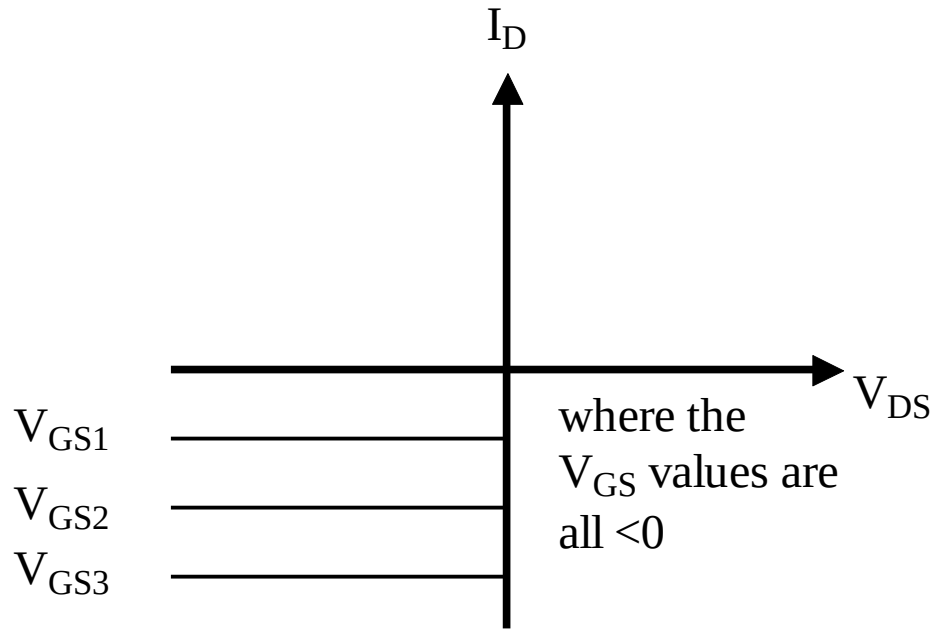

Common Source Amp with T_n Transistor

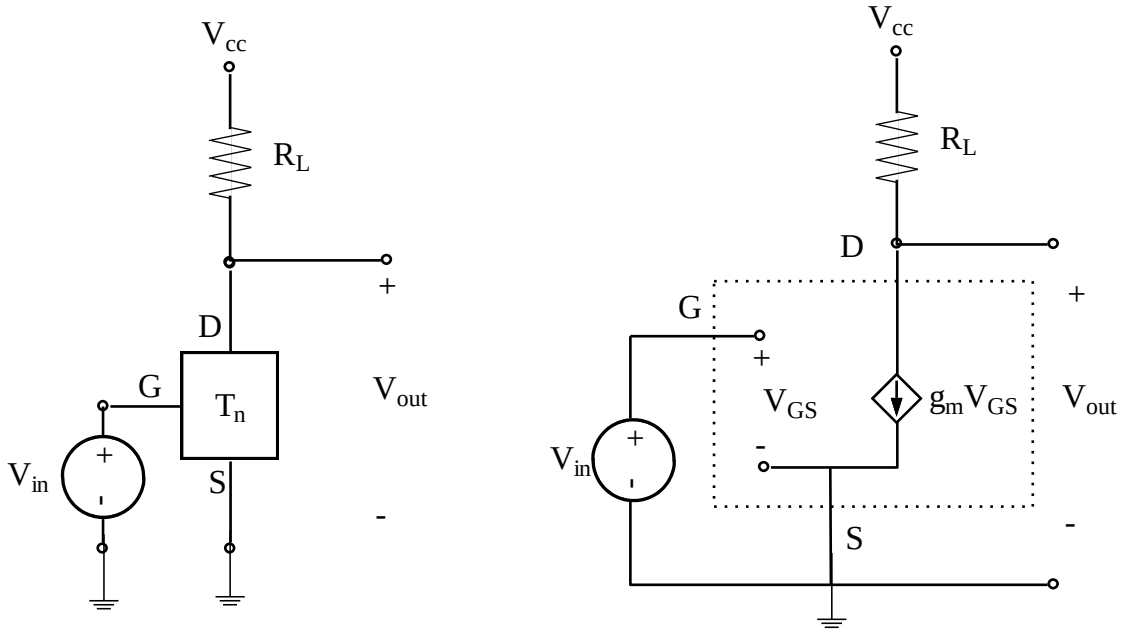

- No Power Supplied by transistor→We need an External Power source
- Use Transistor to Control Current (Power to Load)

T_n Common Source Amp Analysis

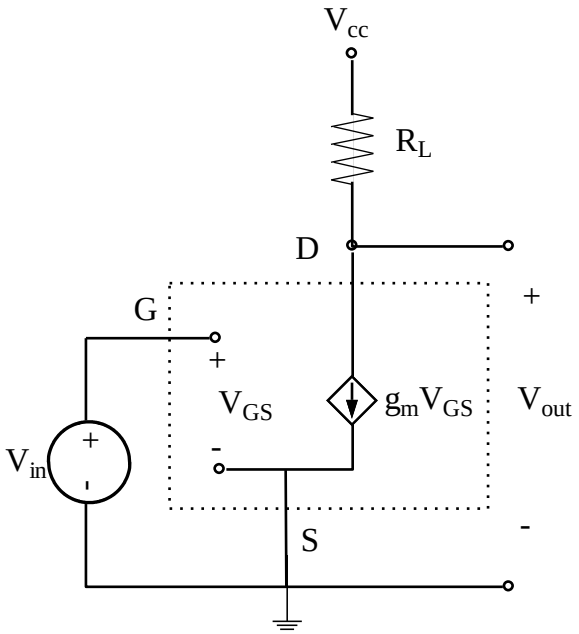

T_n Common Source Amp Analysis

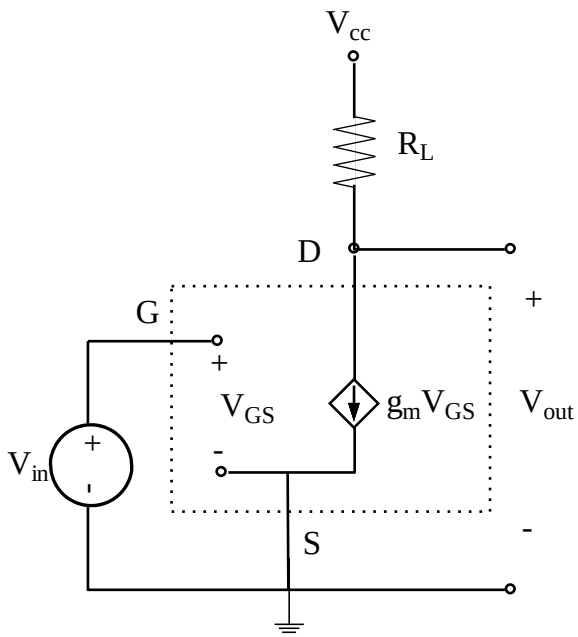

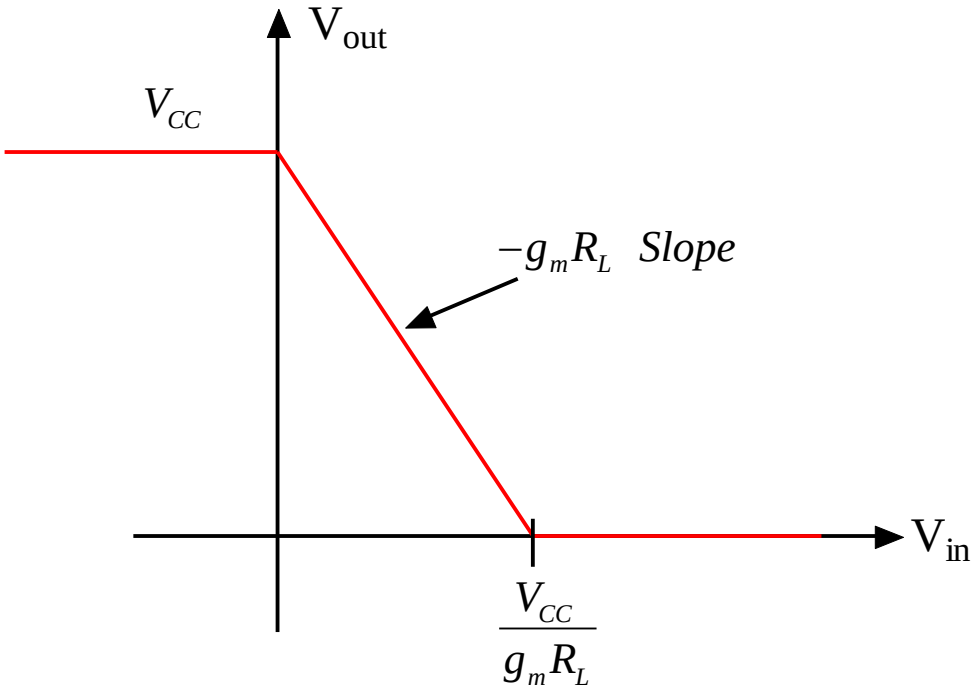

T_n Common Source Amp: Bias Point

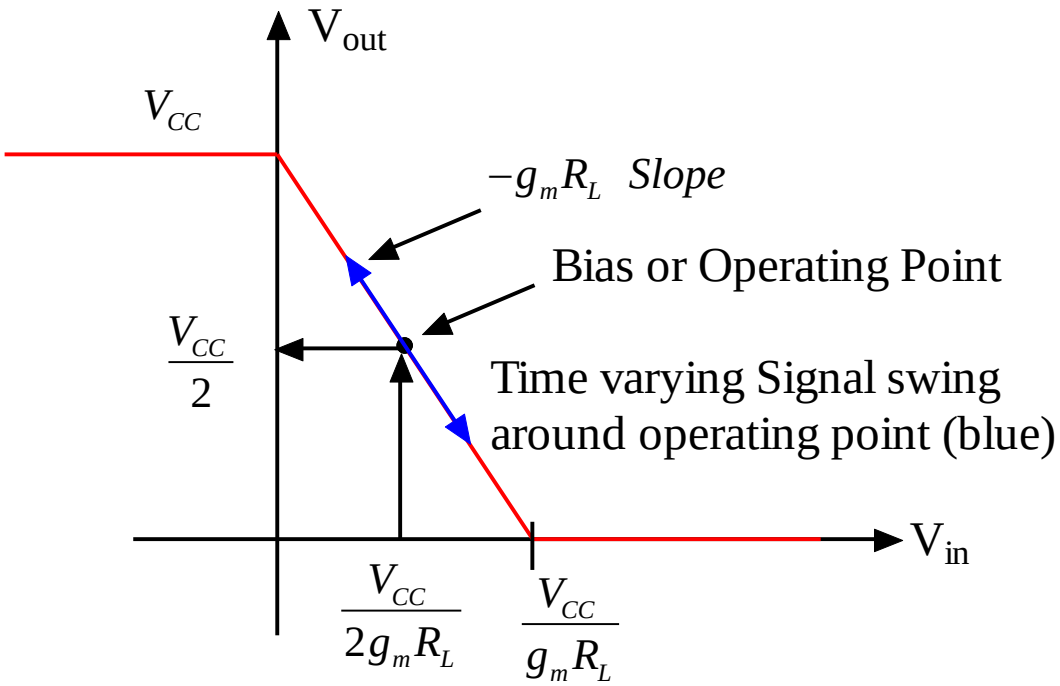

$$V_{out} = -g_m R_L V_{in} + V_{CC}$$

T_n Common Source Amp: Example

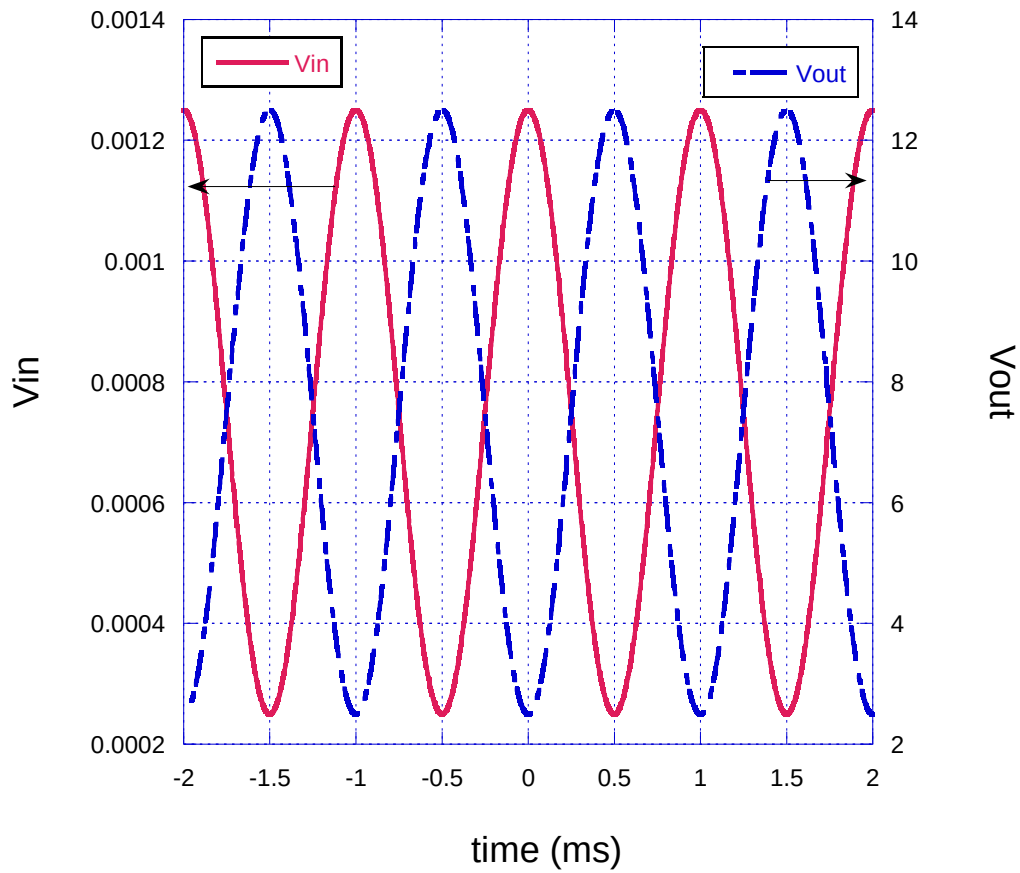

$$V_{CC} = 15V \quad g_m = 10\ \Omega^{-1} \quad R_L = 1K\Omega \rightarrow \ g_m R_L = 10^4$$

$$V_{in} = V_{bias} + B\cos(2\pi ft) \quad f = 100 cycle/s = 100Hz$$

$$B = 0.5mV$$

$$V_{bias} = \left(\frac{V_{CC}}{2g_m R_L}\right) = 15mV$$

$$V_{out,bias} = 7.5V$$

T_n Common Source Amp: Clipping

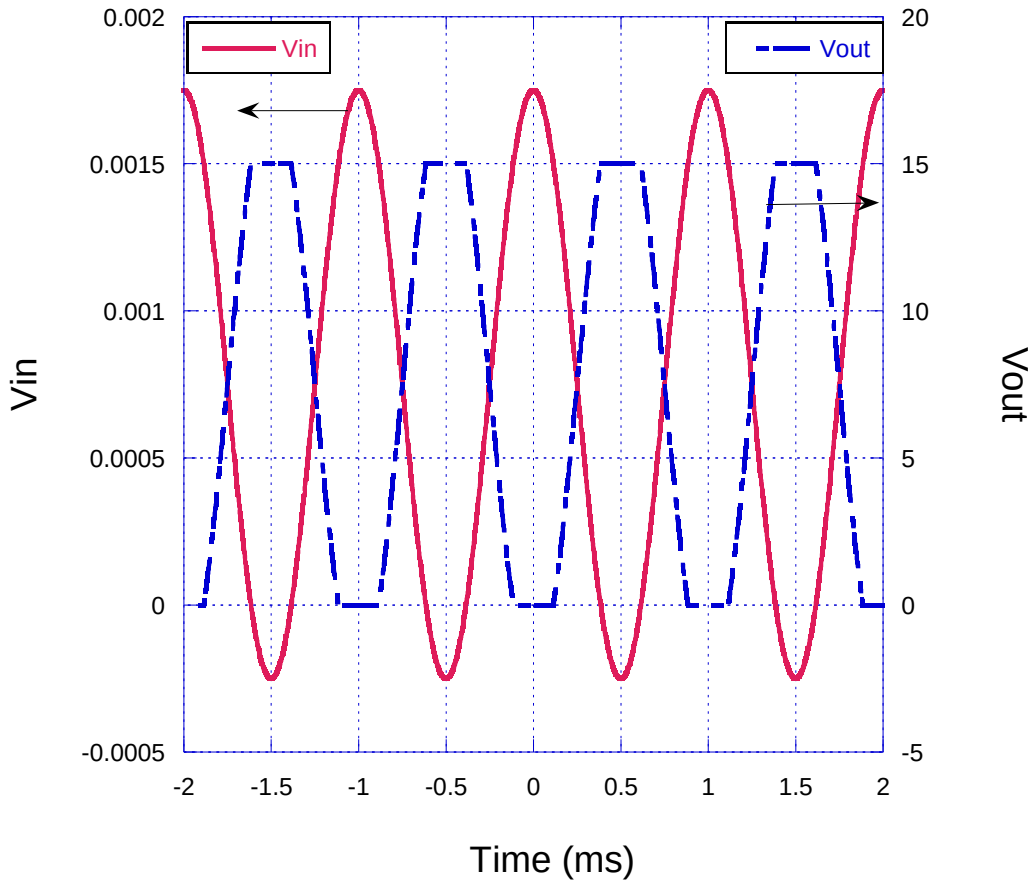

$$V_{CC} = 15V \quad g_m = 10\ \Omega^{-1} \quad R_L = 1K\Omega \rightarrow \ g_m R_L = 10^4$$

$$V_{in} = V_{bias} + B\cos(2\pi ft) \quad f = 100 cycle/s = 100Hz$$

$$B = 1mV$$

$$V_{bias} = \left(\frac{V_{CC}}{2g_m R_L}\right) = 15mV$$

$$V_{out,bias} = 7.5V$$

Square Law MOSFET

$$I_D = \begin{cases} K\left[(V_{GS}-V_T)V_{DS} - \frac{1}{2}V_{DS}^2\right] & \text{if } V_{GS} \geq V_T \text{ and } V_{DS} \leq (V_{GS}-V_T) \quad \text{Triode} \\ \frac{1}{2}K(V_{GS}-V_T)^2 & \text{if } V_{GS} \geq V_T \text{ and } V_{DS} \geq (V_{GS}-V_T) \quad \text{Saturation} \\ 0 & \text{otherwise} \end{cases}$$

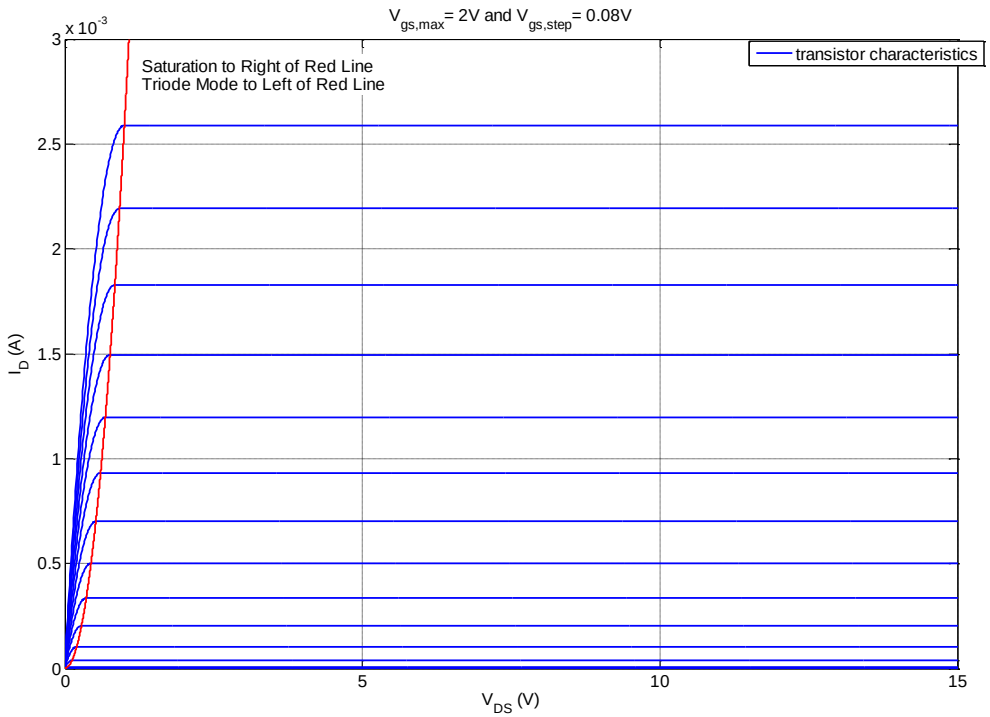

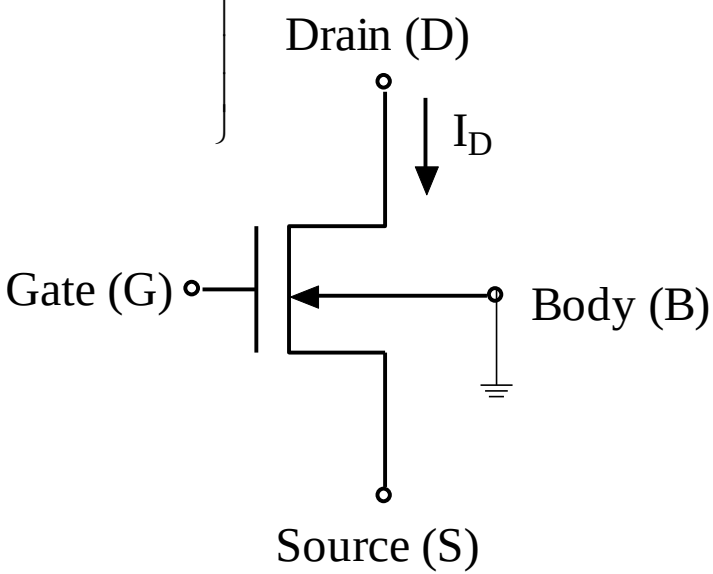

Common Source Amp

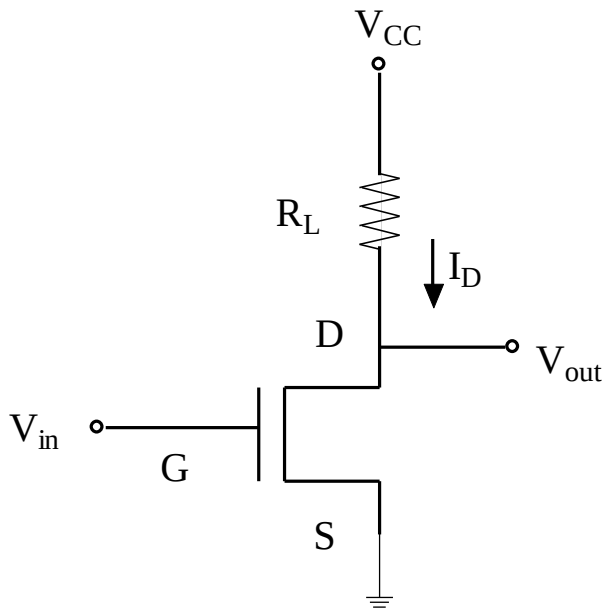

$$V_{GS} = V_{in}$$

$$V_{out} = V_{DS} = V_{CC} - I_D R_L$$

- The Loading Element (R_L) Places an Additional Constraint on I_D
- Circuit Solution Must Simultaneously Match Load Constraint (Ohm's Law), Transistor Characteristic Function (linear-square law), and Circuit Connection Constraint

When is the Circuit in Off/Linear/Sat?

Off ↔ On

$$V_{GS} = V_T$$

$$V_{in} = V_T$$

Off	On
$V_{in} < V_T$	$V_{in} > V_T$

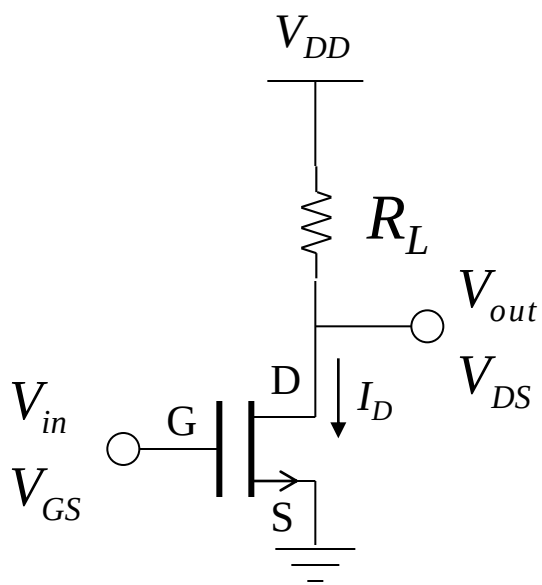

Linear ↔ Saturation

$$V_{DS} = V_{GS} - V_T$$

$$V_{out} = V_{in} - V_T$$

$$V_{out} = V_{DD} - \frac{kR_L}{2}\left(V_{in} - V_T\right)^2 = V_{in} - V_T$$

$$V_{in}^{\ 2} + V_{in}\left(\frac{2}{kR_L} - 2V_T\right) + \left[V_T^2 - \frac{2}{kR_L}\left(V_{DD} + V_T\right)\right] = 0$$

Solve quadratic equation for V_{in}, call "V_{in}^{sat}"

Linear	Saturation
$V_{in} > V_{in}^{sat}$	$V_T < V_{in} < V_{in}^{sat}$

Common Source Amp

$$K = 5.17959\text{mA/V}^2 \quad V_T = 1V \quad R_L = 10K\Omega \quad V_{CC} = 15V$$

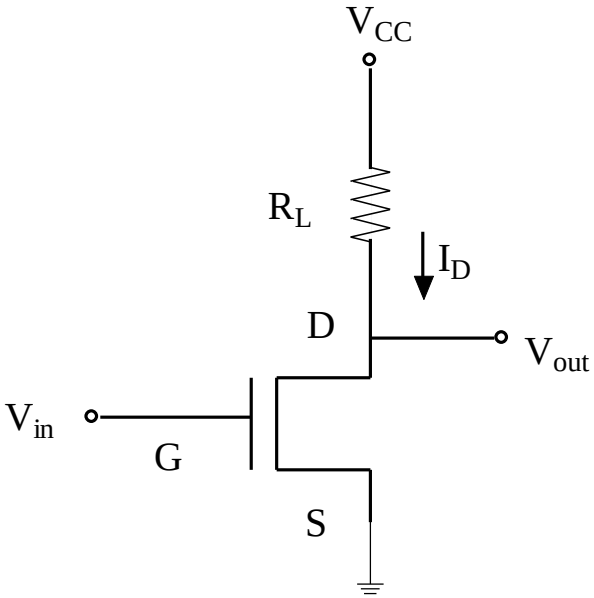

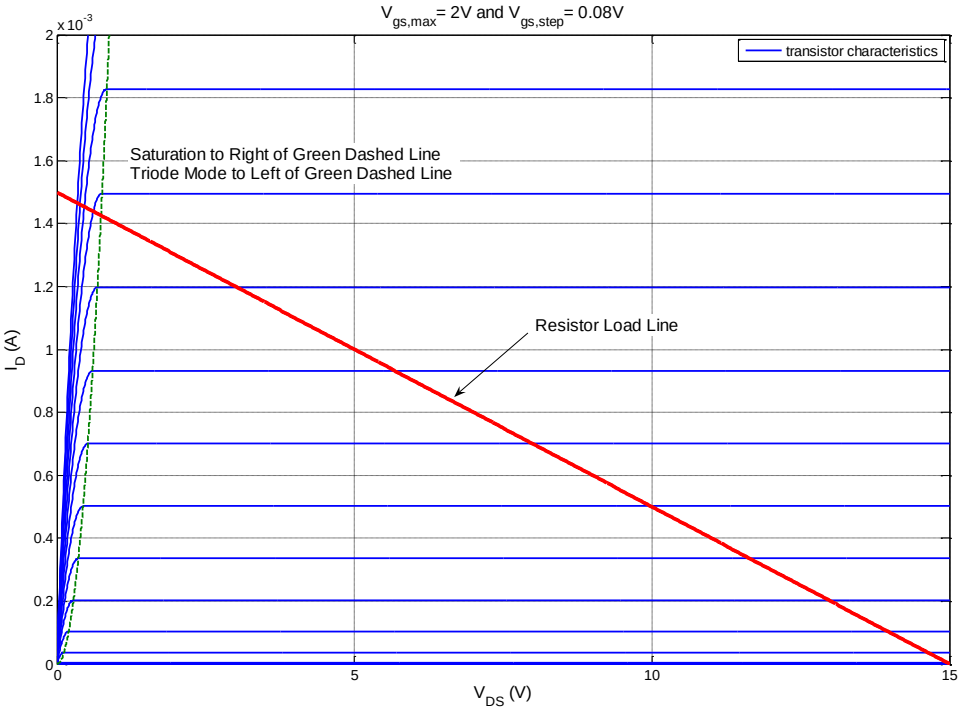

$$V_{GS} = V_{in}$$

$$V_{out} = V_{DS} = V_{CC} - I_D R_L$$

Common Source Amp: Solution

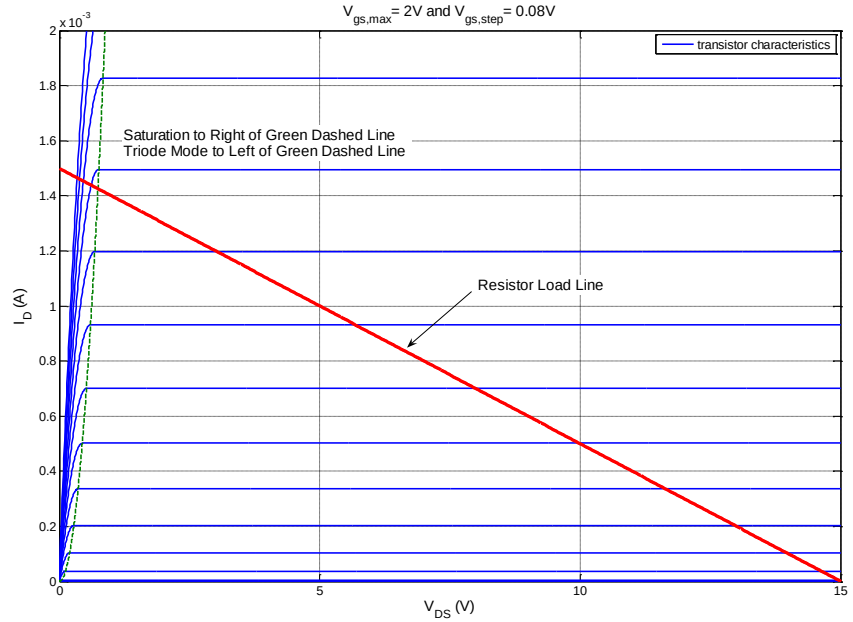

$$\left.\begin{aligned} V_{out} &= V_{DS} = V_{CC} - \frac{R_L K}{2}\left(V_{GS} - V_T\right)^2 \\ &= V_{CC} - \frac{R_L K}{2}\left(V_{in} - V_T\right)^2 \end{aligned}\right\} \text{if } VDS \geq \left(V_{GS} - V_T\right) \text{ Saturation}$$

$$\left.\begin{aligned} V_{out} &= V_{DS} = V_{CC} - R_L K\left[\left(V_{GS} - V_T\right)V_{DS} - \frac{1}{2}V_{DS}^2\right] \\ V_{DS} &= \left[\left(V_{gs} - V_T\right) + \frac{1}{KR_L}\right] - \left\{\frac{1}{4}\left[\left(V_{gs} - V_T\right) + \frac{1}{KR_L}\right]^2 - \left(\frac{2V_{CC}}{KR_L}\right)\right\} \end{aligned}\right\} \text{if } VDS \leq \left(V_{GS} - V_T\right) \text{ Triode}$$

Input/Output Characteristics

How do V_{out} and V_{in} relate?

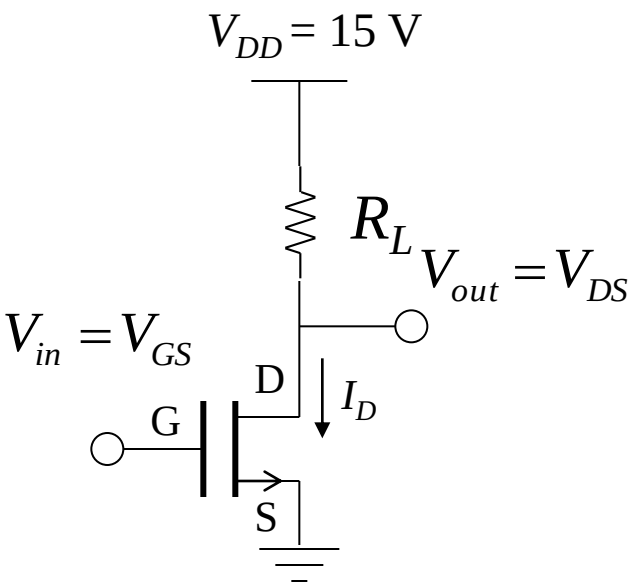

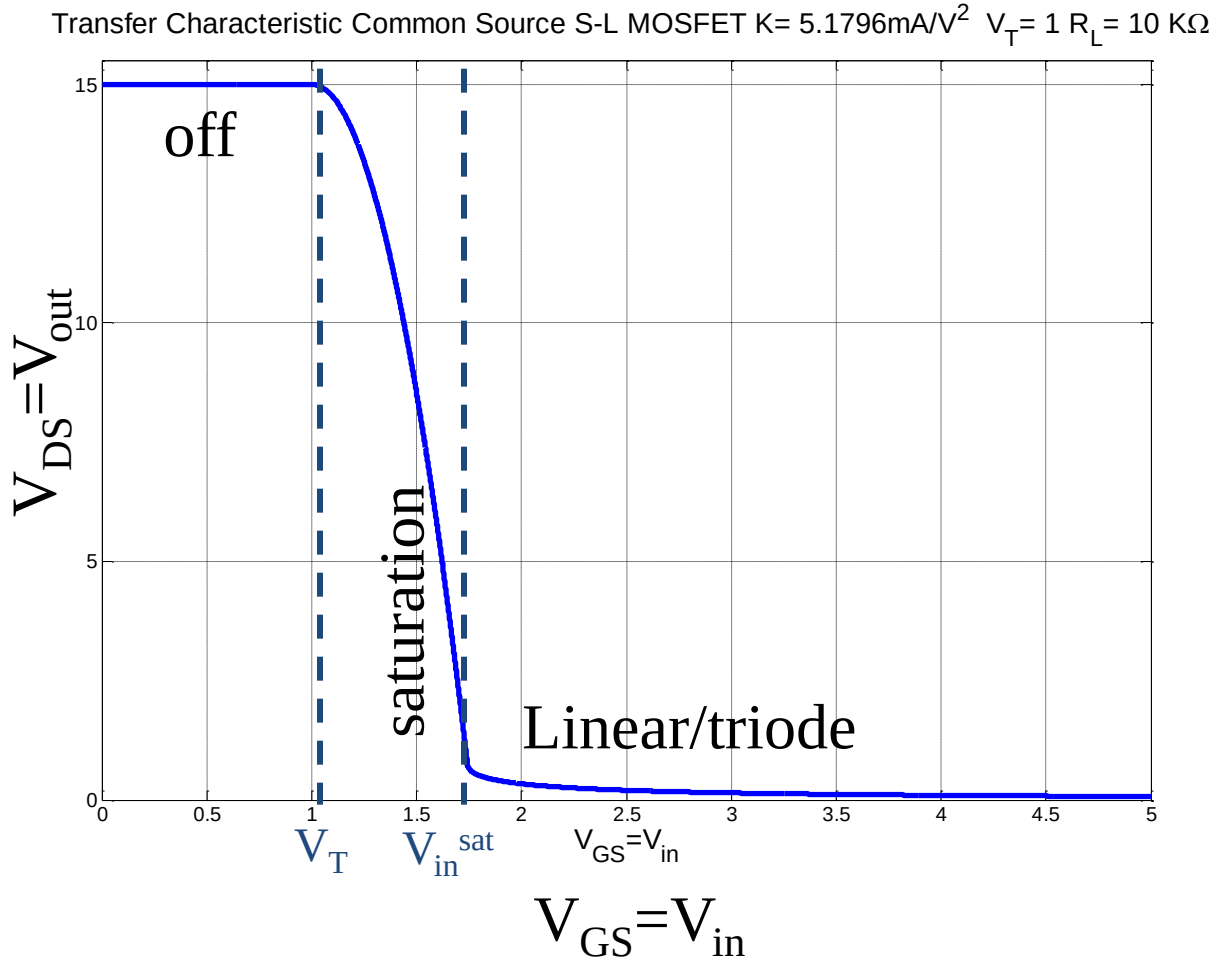

Bias Point

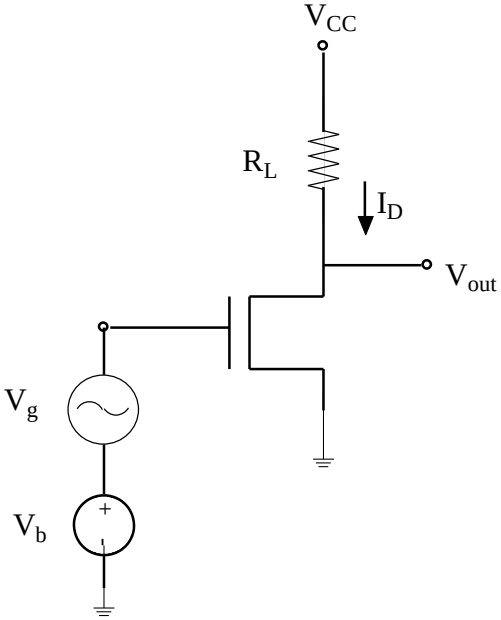

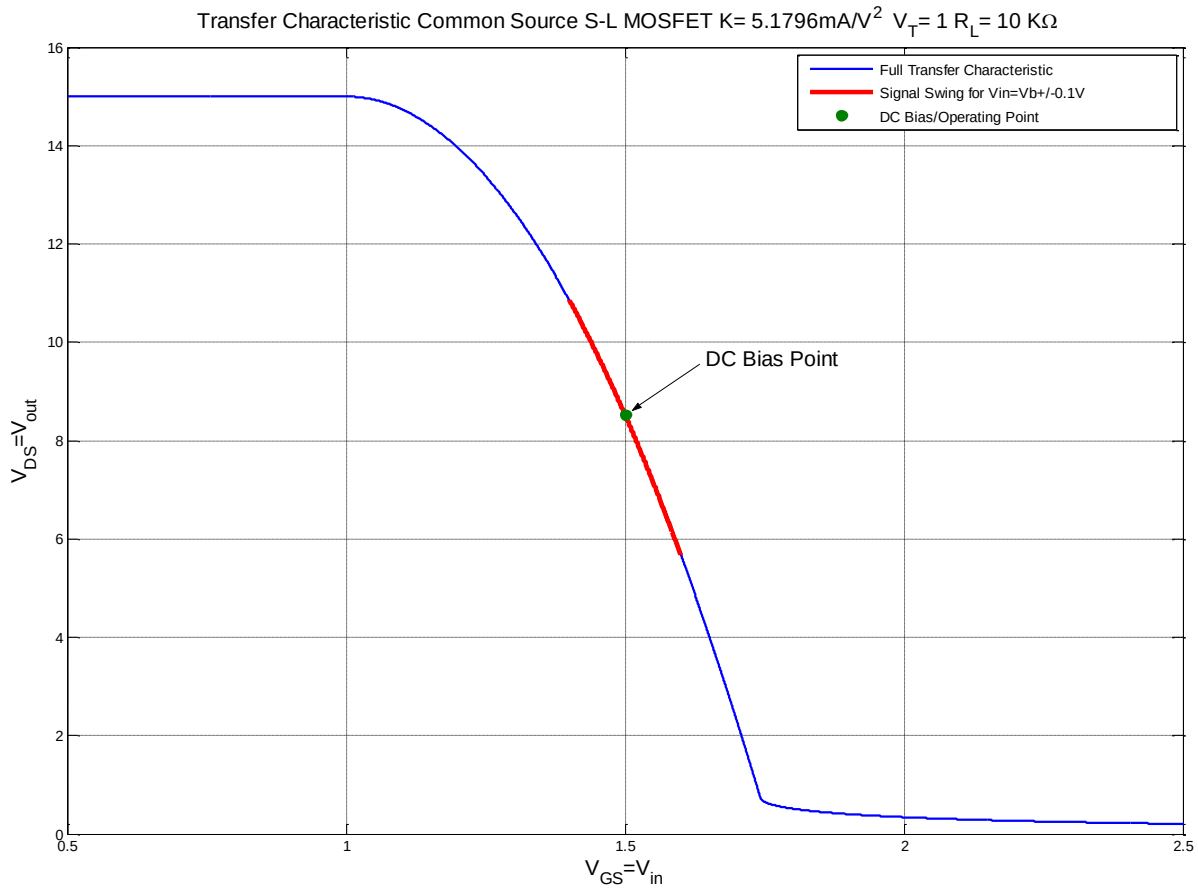

$$Example:$$

$$V_b = 1.5V$$

$$V_{DS,op} \simeq 8.526V$$

$$V_{in} = V_{GS} = V_b + A\cos(2\pi ft)$$

Linearization/Small Signal Concept

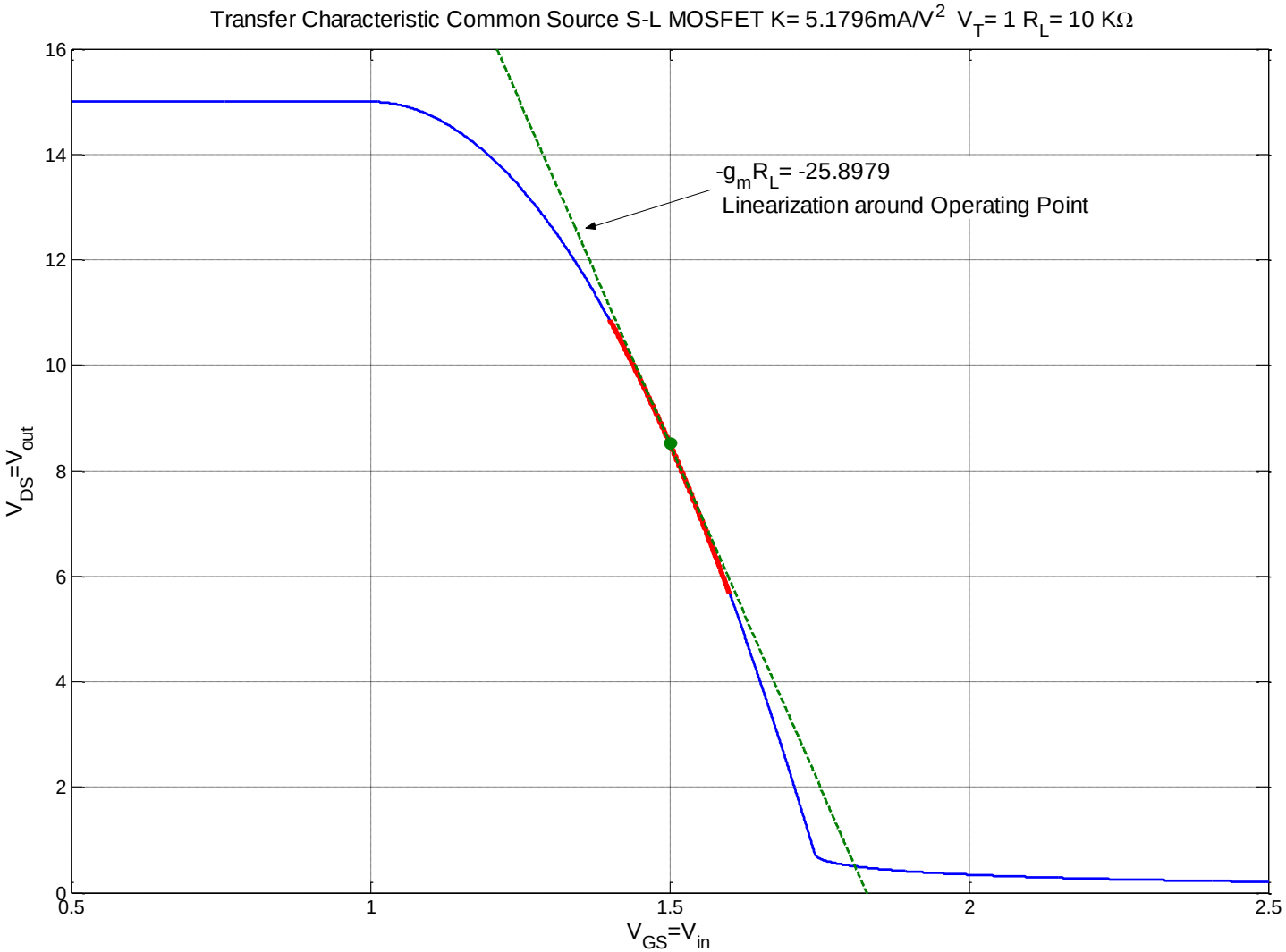

1 mV Input

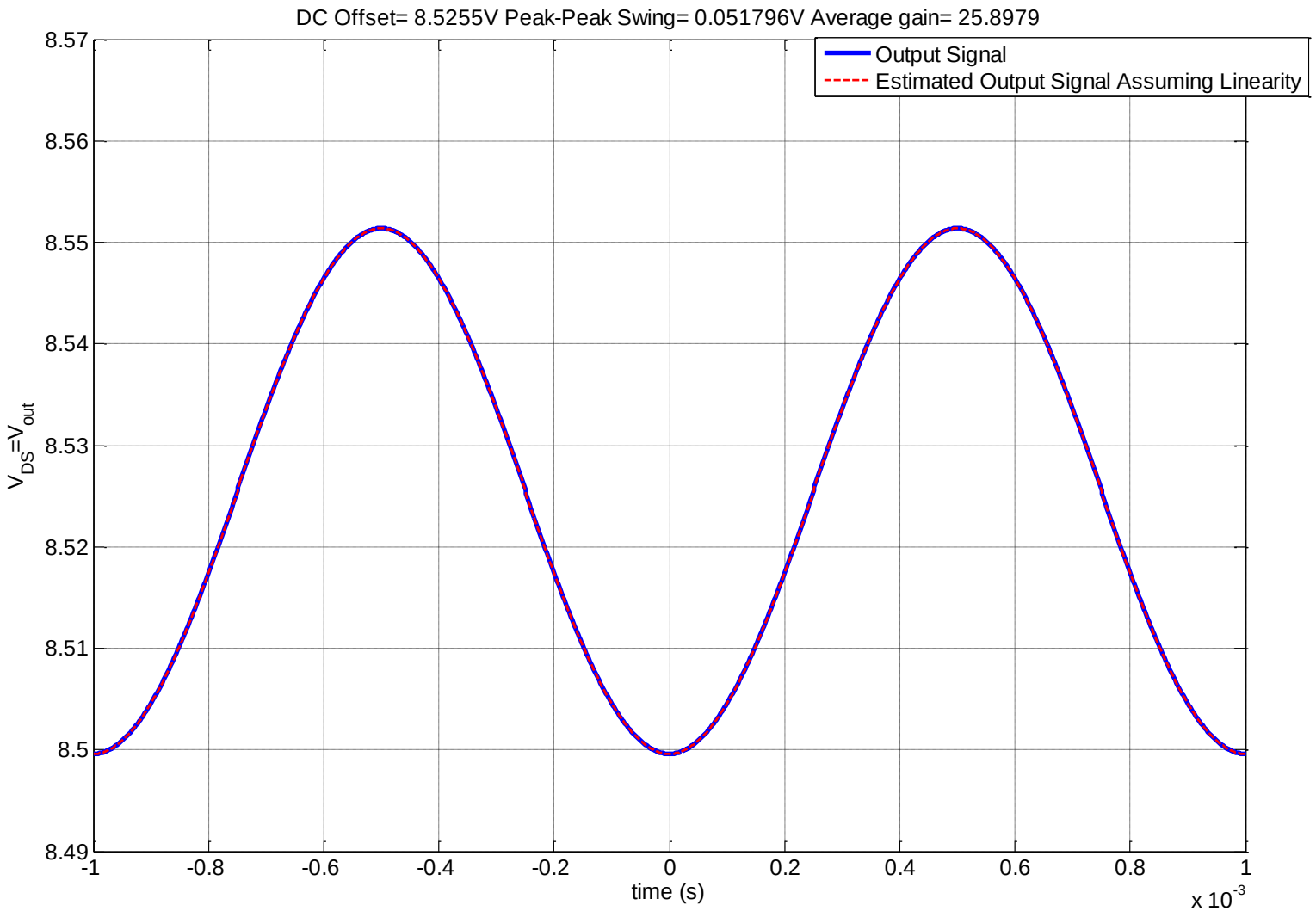
DC Offset= 8.5255V Peak-Peak Swing= 0.051796V Average gain= 25.8979
Output Signal
Estimated Output Signal Assuming Linearity
8.57
8.56
8.55
8.54
8.53
8.52
8.51
8.5
8.49
V_DS=V_out
-1
-0.8
-0.6
-0.4
-0.2
0
0.2
0.4
0.6
0.8
1
time (s)
x 10^-3

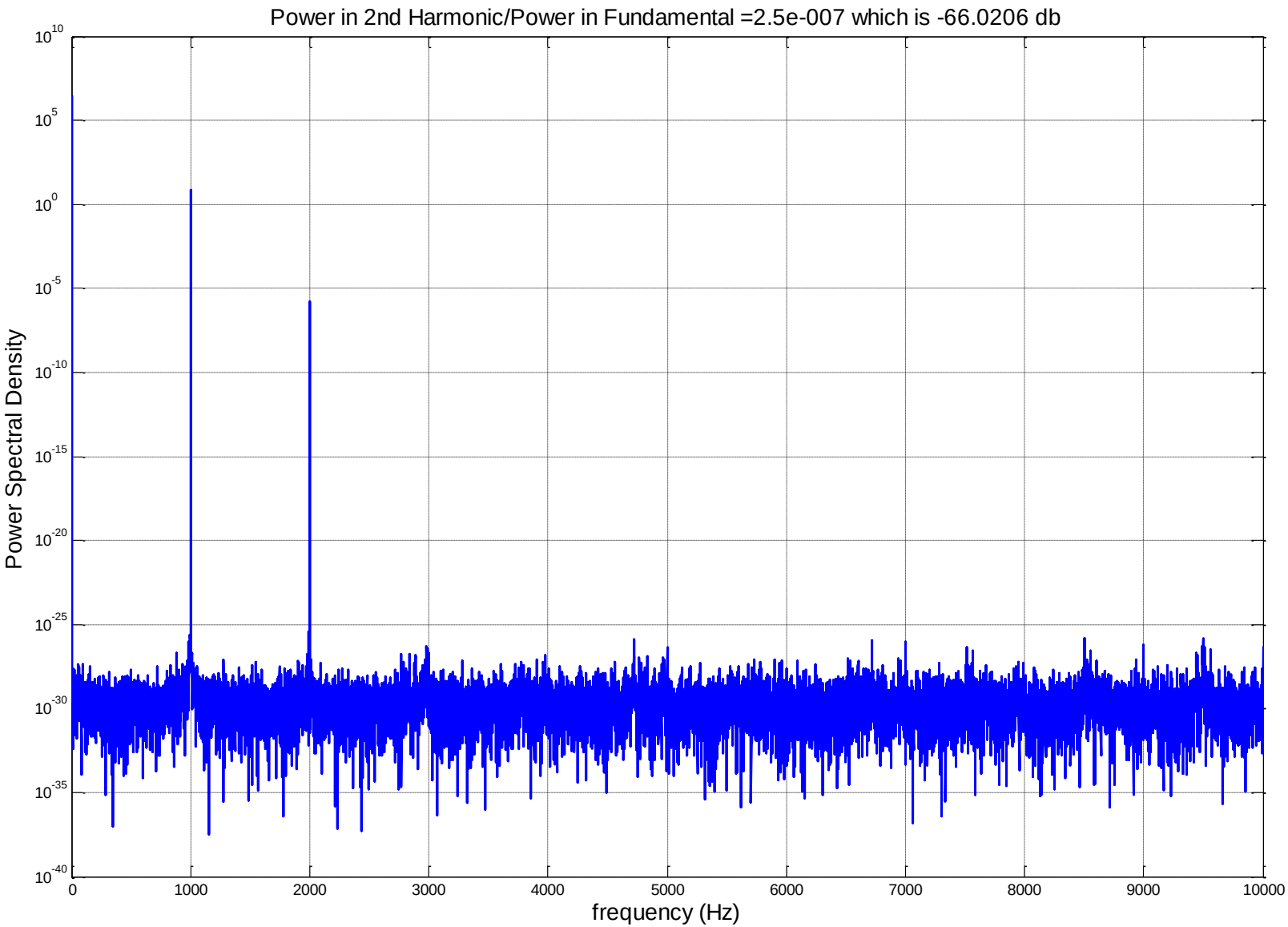
Power in 2nd Harmonic/Power in Fundamental =2.5e-007 which is -66.0206 db
Power Spectral Density
frequency (Hz)
10^10
10^5
10^0
10^-5
10^-10
10^-15
10^-20
10^-25
10^-30
10^-35
10^-40
0
1000
2000
3000
4000
5000
6000
7000
8000
9000
10000

100 mV Input

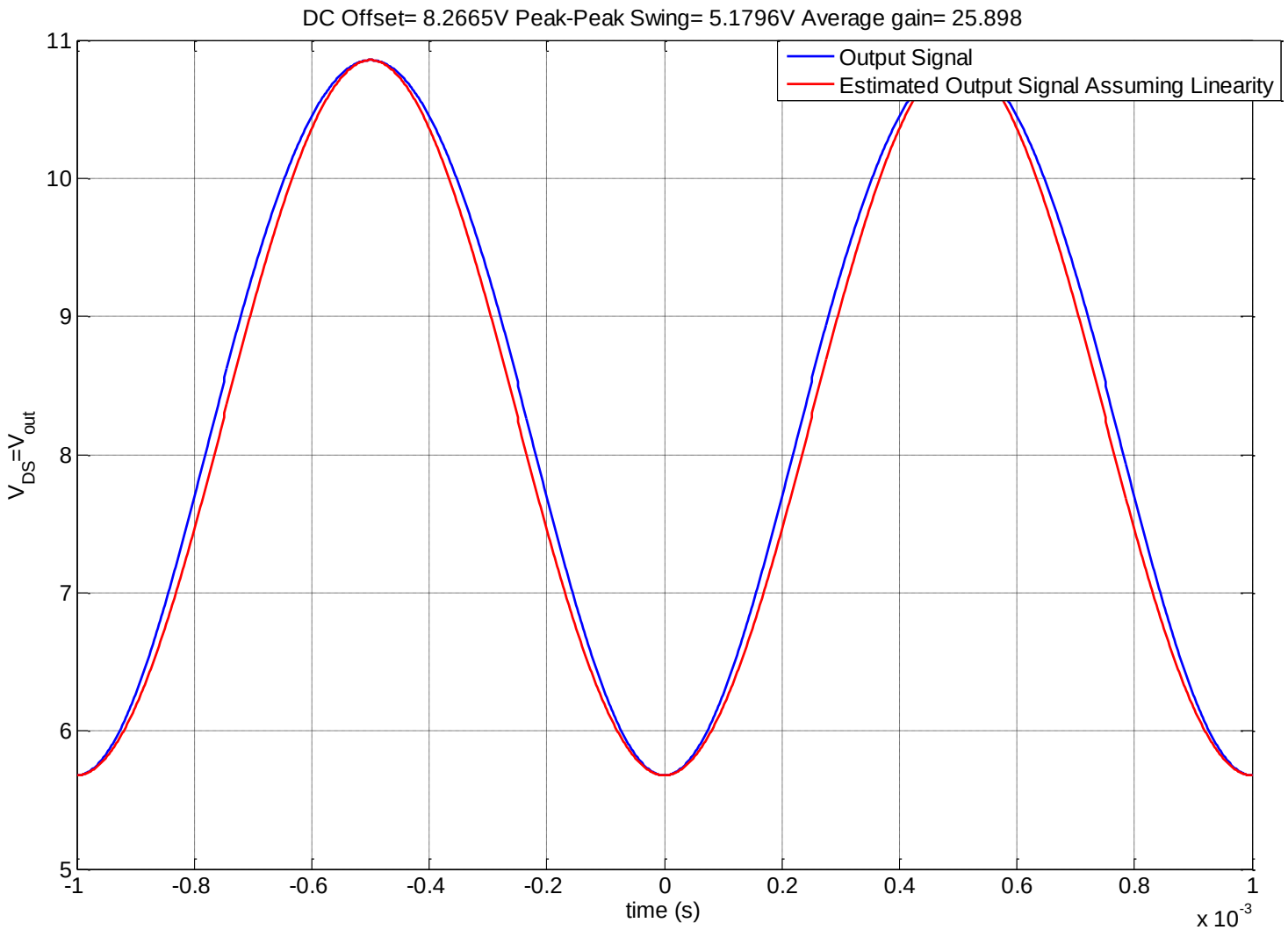
DC Offset= 8.2665V Peak-Peak Swing= 5.1796V Average gain= 25.898
Output Signal
Estimated Output Signal Assuming Linearity
$V_{DS}=V_{out}$
11
10
9
8
7
6
5
-1
-0.8
-0.6
-0.4
-0.2
0
0.2
0.4
0.6
0.8
1
time (s)
x 10^{-3}

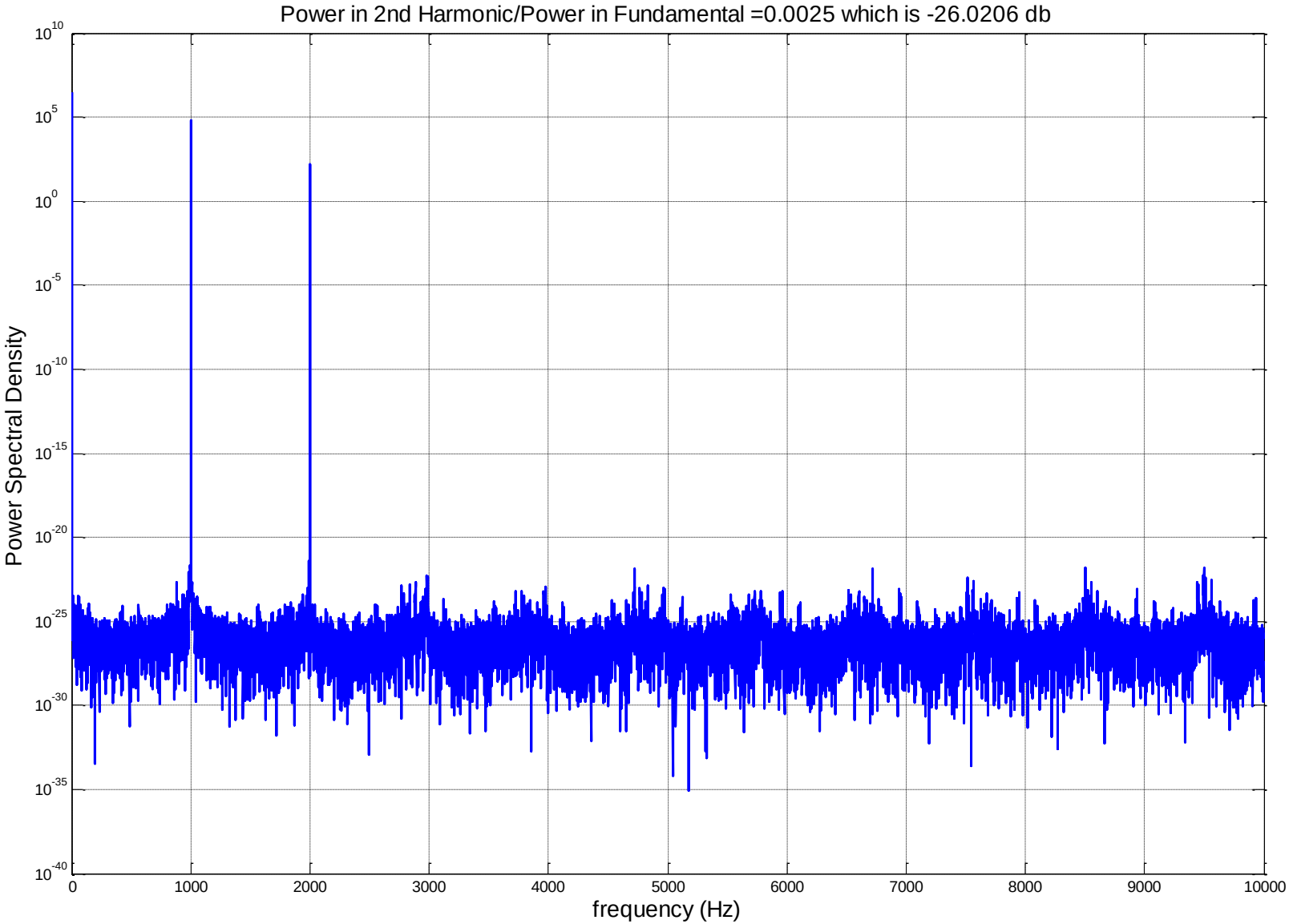
Power in 2nd Harmonic/Power in Fundamental =0.0025 which is -26.0206 db
Power Spectral Density
frequency (Hz)
10^10
10^5
10^0
10^-5
10^-10
10^-15
10^-20
10^-25
10^-30
10^-35
10^-40
0
1000
2000
3000
4000
5000
6000
7000
8000
9000
10000

500 mV Input

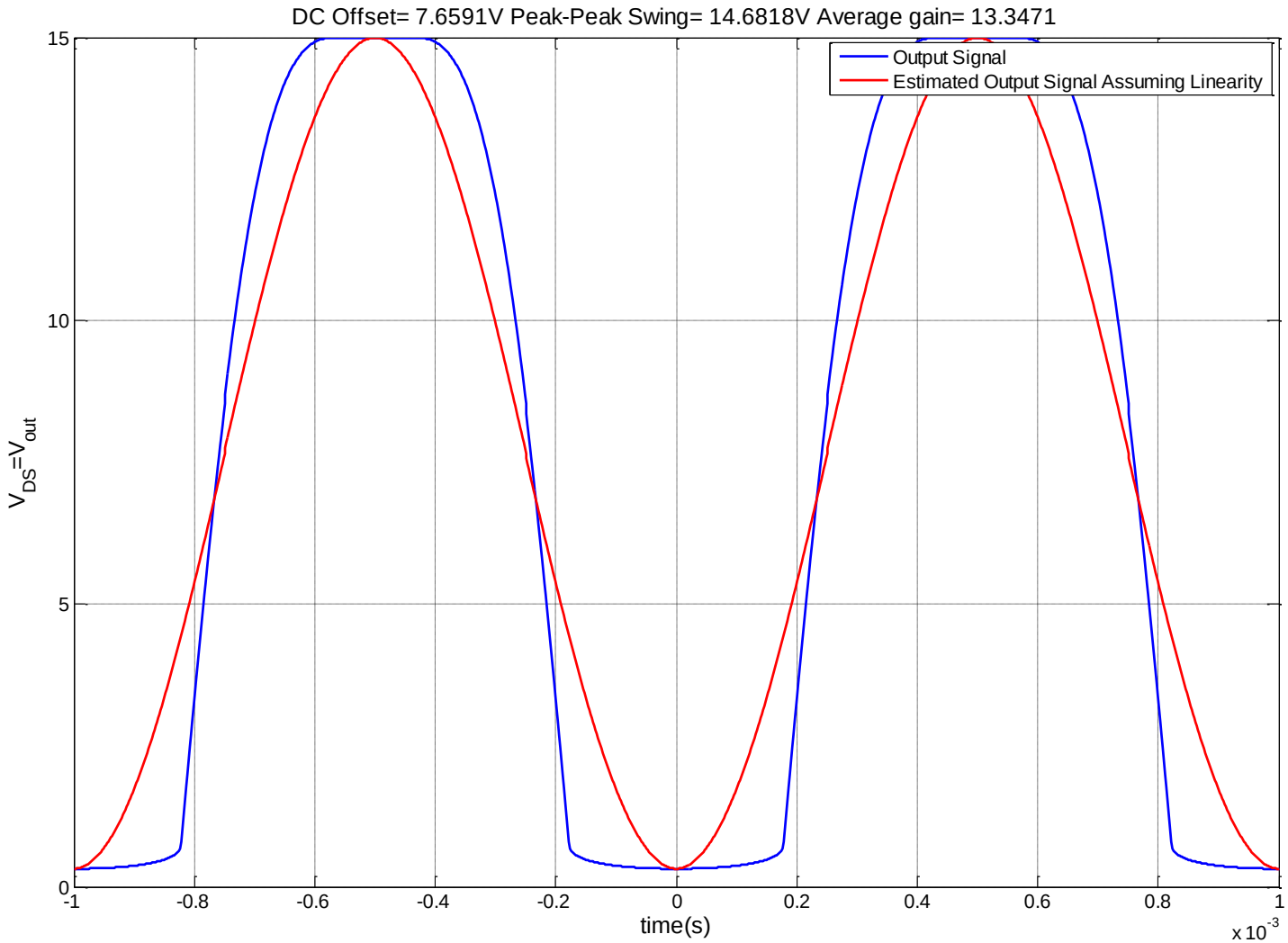
DC Offset= 7.6591V Peak-Peak Swing= 14.6818V Average gain= 13.3471
Output Signal
Estimated Output Signal Assuming Linearity
15
10
5
0
-1
-0.8
-0.6
-0.4
-0.2
0
0.2
0.4
0.6
0.8
1
time(s)
x 10^-3
V_DS=V_out

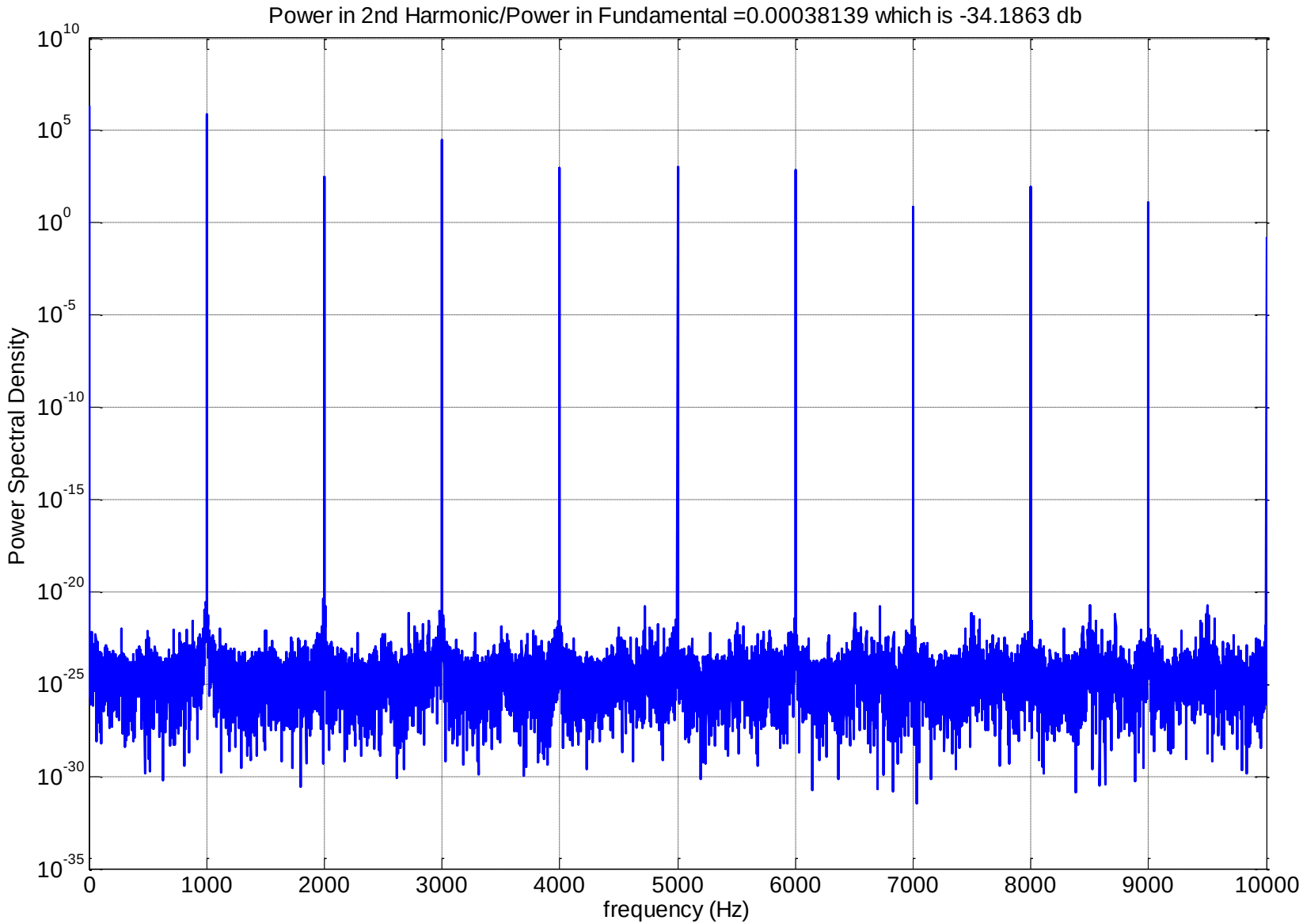
Power in 2nd Harmonic/Power in Fundamental =0.00038139 which is -34.1863 db
Power Spectral Density
frequency (Hz)
10^10
10^5
10^0
10^-5
10^-10
10^-15
10^-20
10^-25
10^-30
10^-35
0
1000
2000
3000
4000
5000
6000
7000
8000
9000
10000

Linearization: Small Signal Analysis

- Use Superposition
- Circuit Solution is DC Operating Point + Small Signal (AC) Variation

$$
\begin{aligned}
V_{out} &= V_{DS} \\
&= DC\,Operating\ Point + small\ signal\ variation \\
&= V_{CC} - R_L I_D \\
&= V_{CC} - R_L \frac{K}{2}\left(V_{GS} - V_T\right)^2 \\
&= V_{CC} - R_L \frac{K}{2}\left(\underset{DC}{V_{GS,0}} + \underset{AC}{v_{gs}} - V_T\right)^2 \\
&\approx V_{CC} - R_L \left\{ \frac{K}{2}\left(V_{GS,0} - V_T\right)^2 + v_{gs} \left.\frac{\partial I_D}{\partial V_{GS}}\right|_{V_{GS0}, V_{DGS0}} \right\} \\
&= V_{CC} - R_L \left\{ \frac{K}{2}\left(V_{GS,0} - V_T\right)^2 + v_{gs} K \left(V_{GS,0} - V_T\right) \right\} \\
&= V_{CC} - R_L \left\{ \frac{K}{2}\left(V_{GS,0} - V_T\right)^2 + v_{gs} g_m \right\} \\
&= V_{DS,0} - g_m R_L v_{gs}
\end{aligned}
$$

Small Signal Model

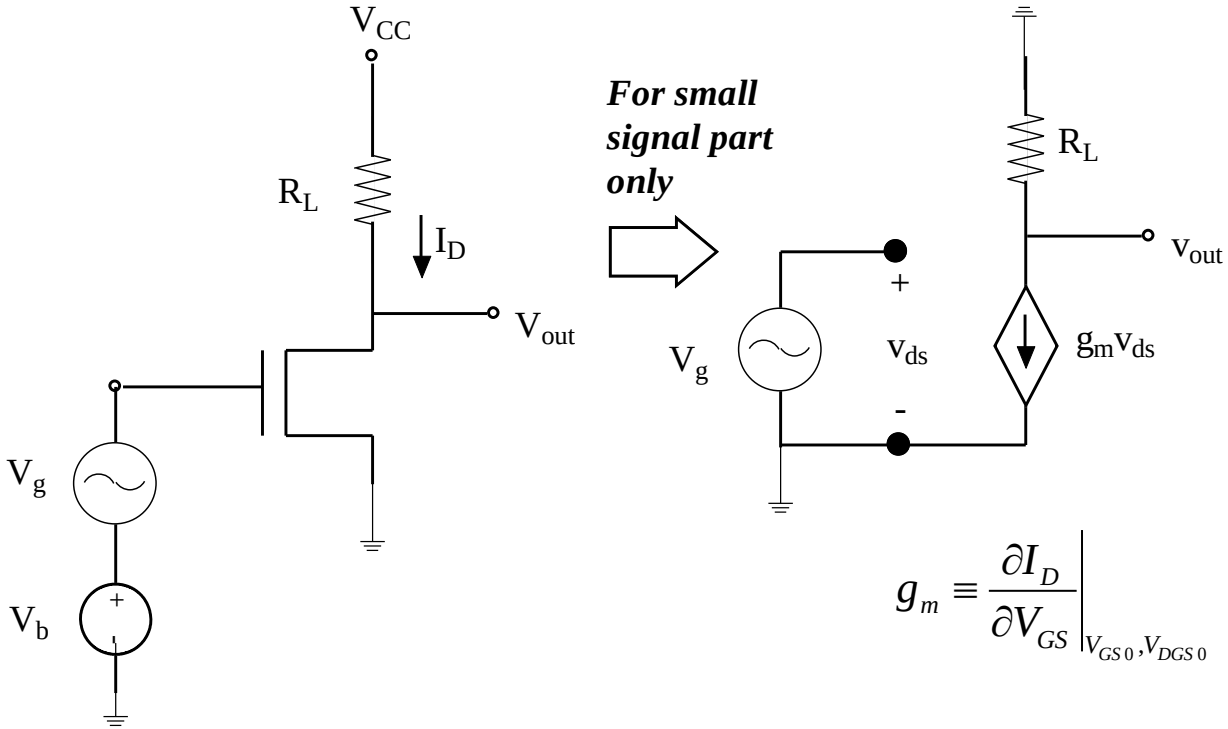

$$g_m \equiv \left.\frac{\partial I_D}{\partial V_{GS}}\right|_{V_{GS0},V_{DGS0}}$$

We find the DC operating points (sometimes nonlinear issues) then analyze AC Small Signal Gain with linear circuit models

Another Digital Circuit Element: NAND

No current flows through resistor, unless both A and B inputs turn their transistors on to "pull down" V_{out}

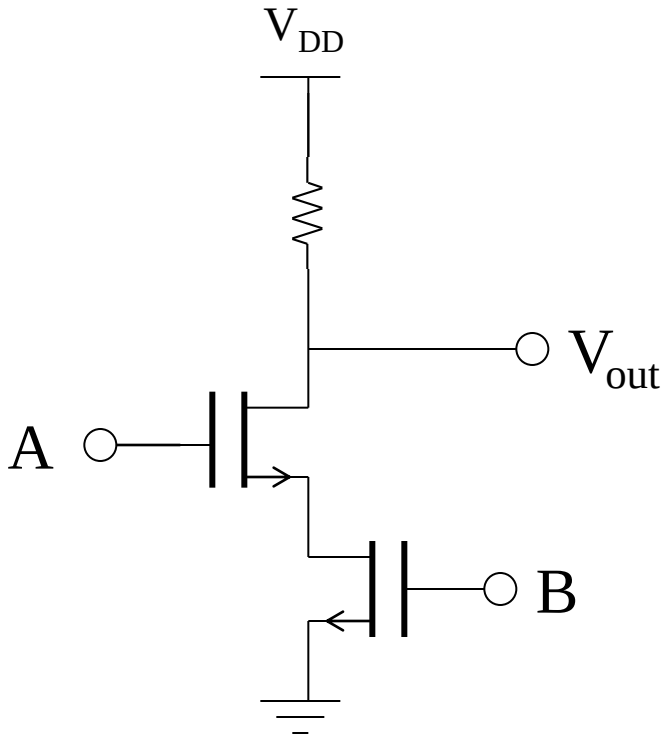

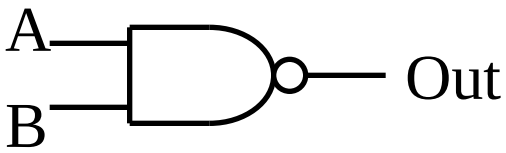

A	B	Out
0	0	1
0	1	1
1	0	1
1	1	0

You can build any binary logic function with NAND gates!

Another Digital Circuit Element: NOR

Current will flow if either A or B inputs turn their transistors on to "pull down" V_{out}

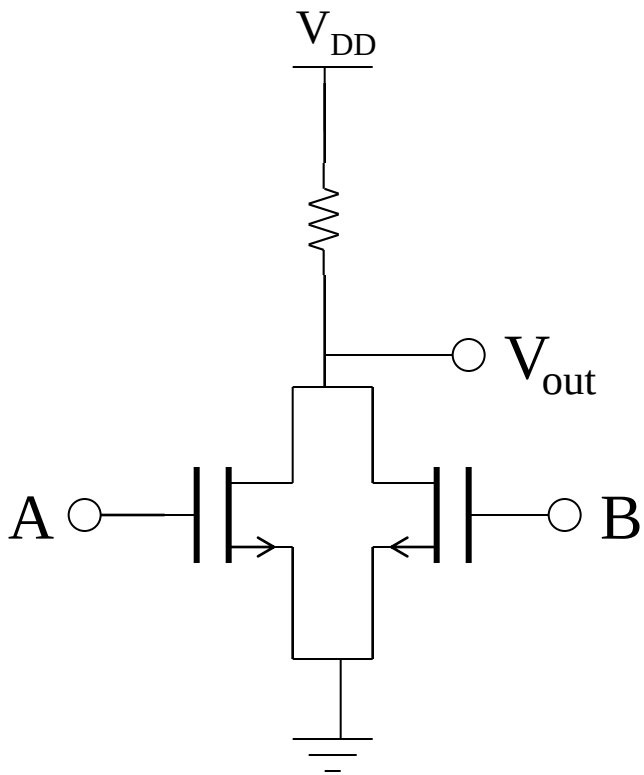

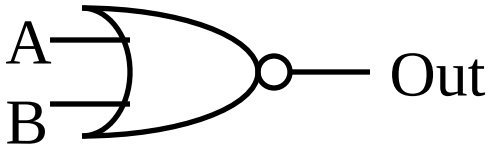

A	B	Out
0	0	1
0	1	0
1	0	0
1	1	0

You can build any binary logic function with NOR gates!