GENERAL SECOND ORDER CIRCUITS, S-DOMAIN METHOD

© Fred Terry
Winter, 2010

What is a "General" SOC?

- Neither Series Nor Parallel RLC Case
- Resulting Differential Equation Is Still of the Same General Form, But Coefficients May Be Significantly Different

$$\frac{\partial^2 i}{\partial t^2} + 2\alpha \frac{\partial i}{\partial t} + \omega_0^2 i = 0$$

$$\omega_0^2 \neq \left(\frac{1}{LC}\right)$$

$$\alpha \neq \left(\frac{R}{2L}\right) or \left(\frac{1}{2RC}\right)$$

General RLC Example 1

3

- Find Governing Differential Eqn.
- Find Natural Response
- Find Forced Response
- Total soln=nat+forced
- Find Initial (Boundary) Conditions
- Match total solution to Initial Conditions

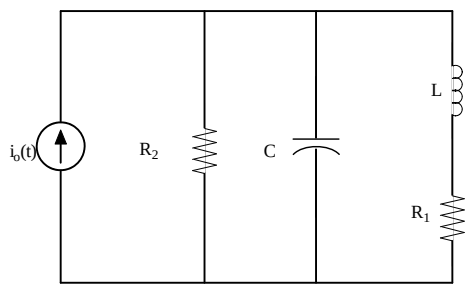

General RLC Example 1

4

- Find Diff Eqn
- KCL/KVL Approach

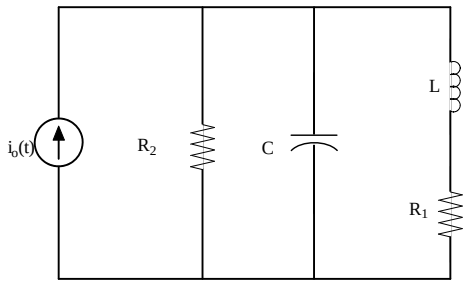

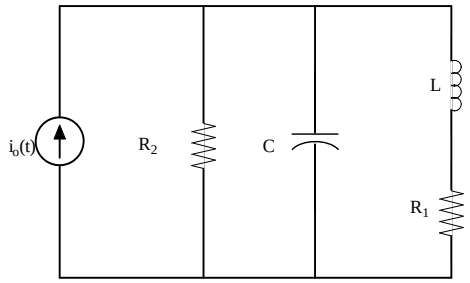

5

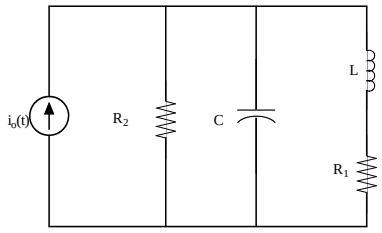

6

Step Response Example

7

- Find s_1,s_2, damping type (nat response)
- Forced response
- B.C.'s

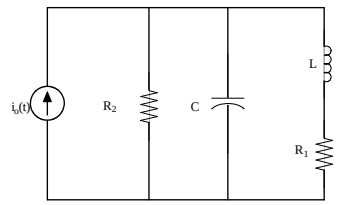

$R_1 = 2.5\Omega \quad R_2 = 5K\Omega \; C = 1\mu F \quad L = 5\mu H \quad i_0(t) = 1u(t) \; A$

Initial Conditions & Forced Response

8

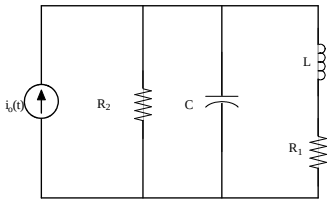

$R_1 = 2.5\Omega \quad R_2 = 5K\Omega \; C = 1\mu F \quad L = 5\mu H \quad i_0(t) = 1u(t) \; A$

Match Initial Conditions

9

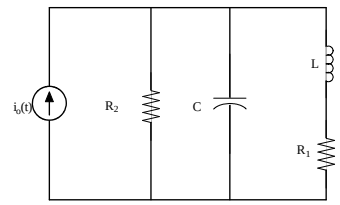

$R_1 = 2.5\Omega \quad R_2 = 5K\Omega \; C = 1\mu F \;\; L = 5\mu H \;\; i_0(t) = 1u(t) \; A$

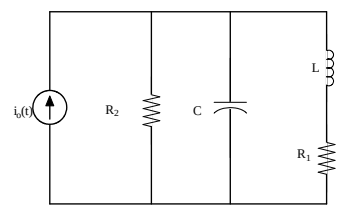

$R_1 = 2.5\Omega \quad R_2 = 5K\Omega \; C = 1\mu F \;\; L = 5\mu H \;\; i_0(t) = 1u(t) \; A$

10

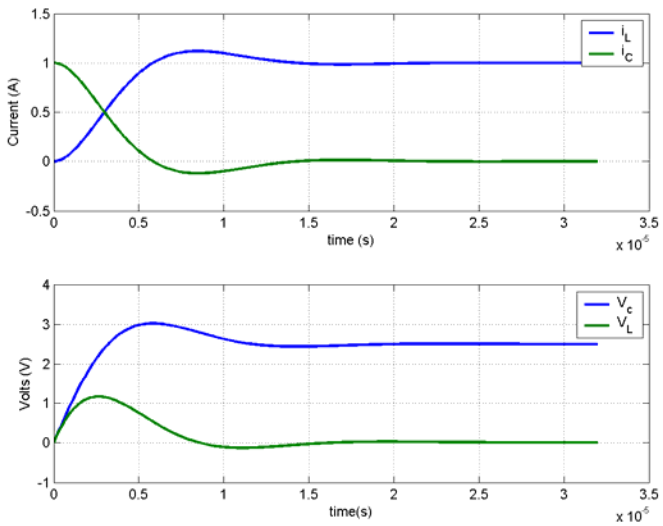

11

Matlab Code for Plots

12

```
% general RLC example
clear all;
R1=2.5;
R2=5e3;
C=1e-6;
L=5e-6;
a=0.5*(R1/L+1/(C*R2))
w0=sqrt((1+R1/R2)/(L*C))
s1=-a+sqrt(a^2-w0^2)
s2=-a-sqrt(a^2-w0^2)
wd=sqrt(w0^2-a^2)
%set for underdamped response
i0=1; %source
iL0=0; %boundary condition
iLf=R2/(R1+R2)*i0
b1=iL0-iLf
Vc0=0; %boundary condition
b2=((Vc0-iL0*R1)/L+a*b1)/wd
t=0:1e-2/a:8/a;
iL=(b1*cos(wd*t)+b2*sin(wd*t)).*exp(-a*t)+iLf;
vL=L*((-a*b1+b2*wd)*cos(wd*t)+(-a*b2-
b1*wd)*sin(wd*t)).*exp(-a*t);
vc=vL+R1*iL;
ic=i0-vc/R2-iL;
subplot(2,1,1);
h=plot(t,iL,t,ic);
set(h,'linewidth',2);
xlabel('time (s)');
ylabel('Current (A)');
legend('i_L','i_C');
grid on;
subplot(2,1,2);
h=plot(t,vc,t,vL);
set(h,'linewidth',2);
xlabel('time(s)');
ylabel('Volts (V)');
legend('V_c','V_L');
grid on;
```

Transient Circuit Analysis

13

- Conventional Approach:
  - Use KVL/KCL and Differential Laws to Find Differential Equation
  - Solve by
    - **Finding Natural Solution Using Ae^{st} Guess**
      - Get Characteristic Equation
      - Find Time Constants, Damping Type
    - Find Forced Solution from Form of Forcing Function
      - Constant for Step Functions (DC)
      - **$A_1f(t) + A_2df/dt + A_3d^2f/dt^2$ for Time-Varying Forcing Functions**
    - Find Initial/Boundary Conditions
    - Match Boundary Conditions to total solution = (natural+forced)

s-Domain Analysis

14

- Different, More Systematic Approach to Differential Equations based on Laplace Transforms
- Assume Solutions will be of the form Ae^{st} from the beginning of the problem
- Obtain Complex Impedances in terms of Complex Frequency s
- Use Standard Circuit Techniques (series-parallel impedance rules, Nodal, Mesh) to find Desired variable (v,i) as Function of s
  - Find Transformed Version of Differential Equation
  - Automatically Get Characteristic Equation
- Find Differential Equation from s-Domain Equation

s-Domain Analysis

15

- Approach Presented Here Does Not Imbed Initial Conditions into Transformed Circuit
  - We Will Find General Differential Equation for Circuit
  - We Still Will Have to Apply Initial Conditions to General Solution
- More General Laplace Technique is Presented in EECS 216
  - Imbeds Initial Conditions
  - Allows Solutions of N-order Circuits through Inverse Laplace Transform

Laplace Transform (1-sided)

16

For most signals, we can write:

$$f(t) = \frac{1}{2\pi j}\int_{-\infty}^{\infty} F(s)e^{st}ds$$

where $s = \sigma + j\omega$ **and the above integral (inverse Laplace tranform) is taken over** $\omega = -\infty \ to \ \infty$

So by super-position, we can consider e^{st} **as general input signal for our linear circuits (systems).**

We can find the values of $F(s)$ **using the 1-sided Laplace transform:**

$$F(s) = \int_{0^-}^{\infty} f(t)e^{-st}dt$$

We don't have the time to go into this in great detail in EECS 215 (EECS 216 will do this), but we will look at enough to make our lives easier.

Capacitor in s-Domain

17

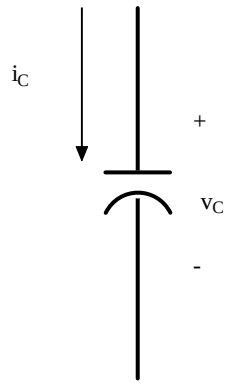

Inductor in s-Domain

18

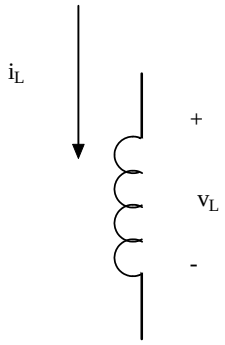

Capacitors/Inductors in s-Domain

19

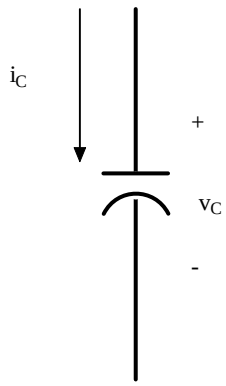

Suppose $V_C(t) = Ae^{st}$

$$i_C = C\frac{\partial V_C}{\partial t} = sCAe^{st}$$

$$V_C = Z_C i_C \rightarrow Z_C = \frac{1}{sC}$$

Suppose $i_L(t) = Ae^{st}$

$$V_L = L\frac{\partial i_L}{\partial t} = sLAe^{st}$$

$$V_L = Z_L i_L \rightarrow Z_L = sL$$

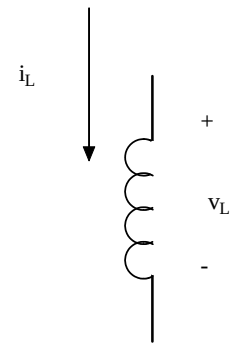

s-Domain Summary

20

$C \rightarrow Z_C = \frac{1}{sC}$ **Complex Impedance , Z, (Ω) analogous to Resistance**

$L \rightarrow Z_L = sL$

$R \rightarrow Z_R = R$ **(no change)**

s **acts a differential operator**

$sV_C \rightarrow \frac{\partial V_C}{\partial t}$ $\quad s^2V_C \rightarrow \frac{\partial^2 V_C}{\partial t^2}$

$si_L \rightarrow \frac{\partial i_L}{\partial t}$ $\quad s^2 i_L \rightarrow \frac{\partial^2 i_L}{\partial t^2}$

1. Convert circuit to the s-domain impedances and solve for the desired variable using nodal, mesh, or any other "DC" method yielding an equation in terms of circuit parameters and powers of s.

2. Convert s-domain equation back to differential equation.

3. The natural decay/characteristic equation is obtained automatically in the s-domain circuit analysis.

4. Initial/Boundary Condition matching is done through circuit analysis.

EECS216 : More Thorough Laplace View

21

$$if\ \ L\left[f(t)\right] = F(s)\ one-sided\ Laplace\,Transform$$

$$L\left[\frac{df}{dx}\right] = sF(s) - f(0^-)$$

$$L\left[\frac{d^2 f}{dx^2}\right] = s^2 F(s) - sf(0^-) - f'(0^-)$$

In the approach presented here, we are ignoring the initial values and our goal is only to get the differential equation and natural response.

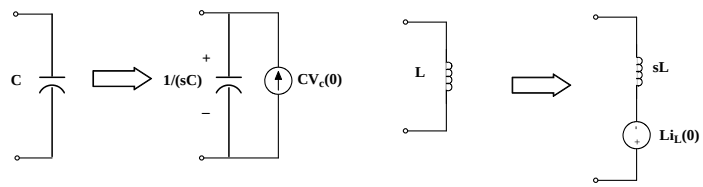

General RLC Example 1

22

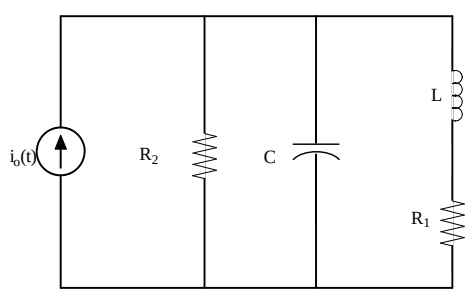

23

Nodal Analysis

$$i_0 = V_C\left[\frac{1}{R_2}+\frac{1}{1/sC}+\underbrace{\frac{1}{sL+R_1}}_{series\,combination}\right]$$

$$= V_C\left[\frac{1}{R_2}+sC+\frac{1}{sL+R_1}\right]$$

$$(sL+R_1)i_0 = V_C\left[s\frac{L}{R_2}+\frac{R_1}{R_2}+sC(sL+R_1)+1\right]$$

$$= V_C\left[LCs^2+\left(\frac{L}{R_2}++CR_1\right)s+\left(1+\frac{R_1}{R_2}\right)\right]$$

Maps back to

$$L\frac{\partial i_0}{\partial t}+R_1 i_0 = LC\frac{\partial^2 V_C}{\partial t^2}+\left(\frac{L}{R_2}+CR_1\right)\frac{\partial V_C}{\partial t}+\left(1+\frac{R_1}{R_2}\right)V_C$$

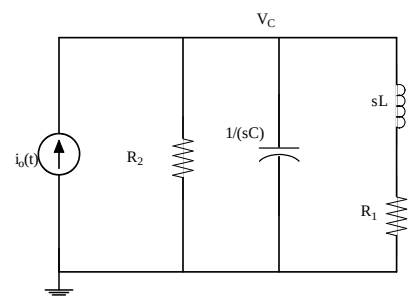

Or to get an i_L equation:

$$(sL+R_1)i_0 = V_C\left[LCs^2+\left(\frac{L}{R_2}+CR_1\right)s+\left(1+\frac{R_1}{R_2}\right)\right]$$

$$i_L = \frac{V_C}{(sL+R_1)} \quad \rightarrow$$

$$i_0 = \frac{V_C}{(sL+R_1)}\left[LCs^2+\left(\frac{L}{R_2}+CR_1\right)s+\left(1+\frac{R_1}{R_2}\right)\right]$$

$$i_0 = i_L\left[LCs^2+\left(\frac{L}{R_2}+CR_1\right)s+\left(1+\frac{R_1}{R_2}\right)\right]$$

yielding the same differential equation for i_L as before

24

Current Divider form

$$i_L = i_0\left[\frac{\dfrac{1}{sL+R_1}}{\dfrac{1}{R_2}+\dfrac{1}{1/sC}+\dfrac{1}{sL+R_1}}\right]$$

$$= i_0\left[\frac{\dfrac{1}{sL+R_1}}{\dfrac{1}{R_2}+sC+\dfrac{1}{sL+R_1}}\right]$$

$$= i_0\left[\frac{1}{\dfrac{sL+R_1}{R_2}+sC\left(sL+R_1\right)+1}\right]$$

$$= i_0\left[\frac{1}{LCs^2+\left(\dfrac{L}{R_2}+R_1C\right)s+\left(1+\dfrac{R_1}{R_2}\right)}\right]$$

$$i_0 = i_L\left[LCs^2+\left(\frac{L}{R_2}+R_1C\right)s+\left(1+\frac{R_1}{R_2}\right)\right]$$

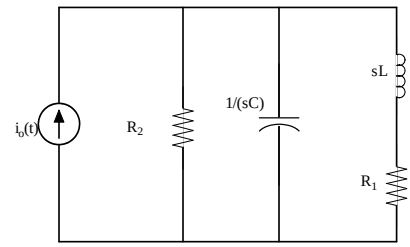

Maps back to

$$i_0 = LC\frac{\partial^2 i_L}{\partial t^2}+\left(\frac{L}{R_2}+CR_1\right)\frac{\partial i_L}{\partial t}+\left(1+\frac{R_1}{R_2}\right)i_L$$

$$\frac{1}{LC}i_0 = \frac{\partial^2 i_L}{\partial t^2}+\underbrace{\left(\frac{1}{R_2C}+\frac{R_1}{L}\right)}_{2\alpha}\frac{\partial i_L}{\partial t}+\underbrace{\frac{1}{LC}\left(1+\frac{R_1}{R_2}\right)}_{\omega_0^2}i_L$$

Example 2: $V_c(t)$

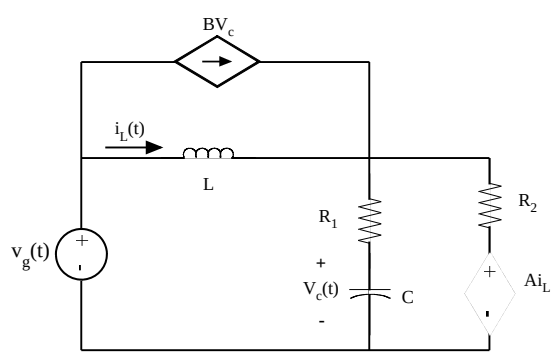

Example 2: $V_c(t)$

27

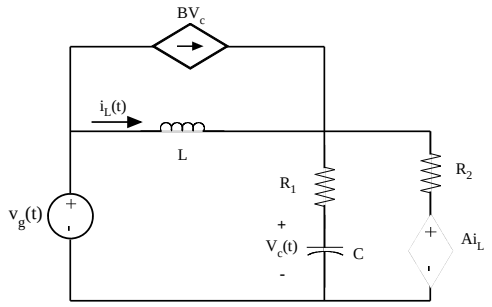

Example 2: $V_c(t)$

28

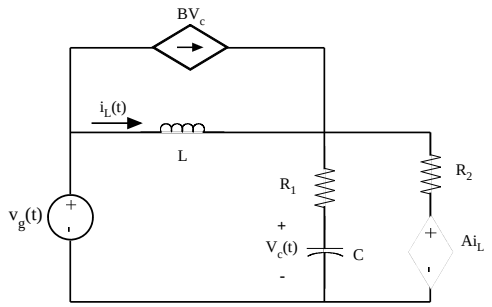

Example 2: $V_c(t)$

29

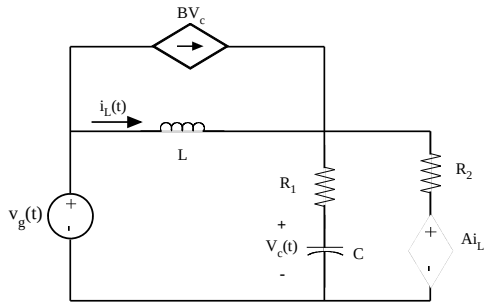

Example 2: $V_c(t)$

30

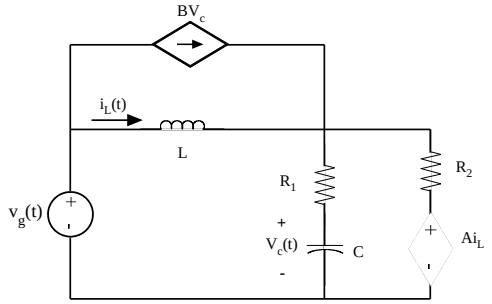

Example 2: $V_c(t)$

31

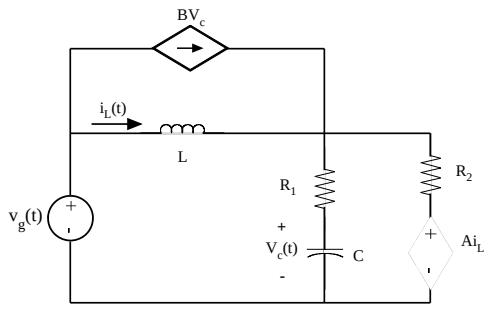

Example 3: Multiple Feedback Bandpass Filter

32

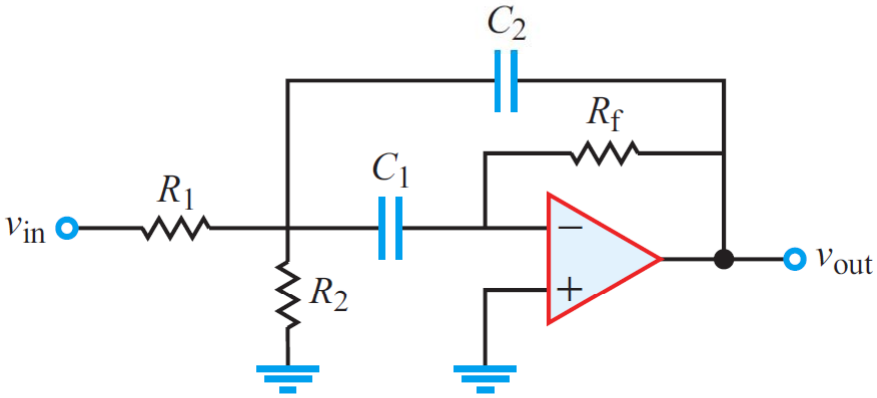

Figure P6.49: Circuit for Problem 6.49.

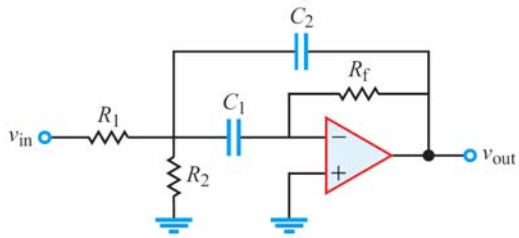

Figure P6.49: Circuit for Problem 6.49.

33

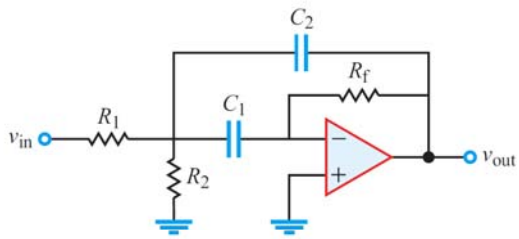

Figure P6.49: Circuit for Problem 6.49.

34

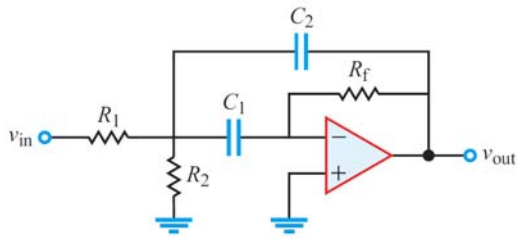

Figure P6.49: Circuit for Problem 6.49.

35

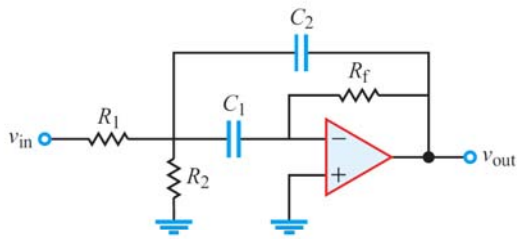

Figure P6.49: Circuit for Problem 6.49.

36