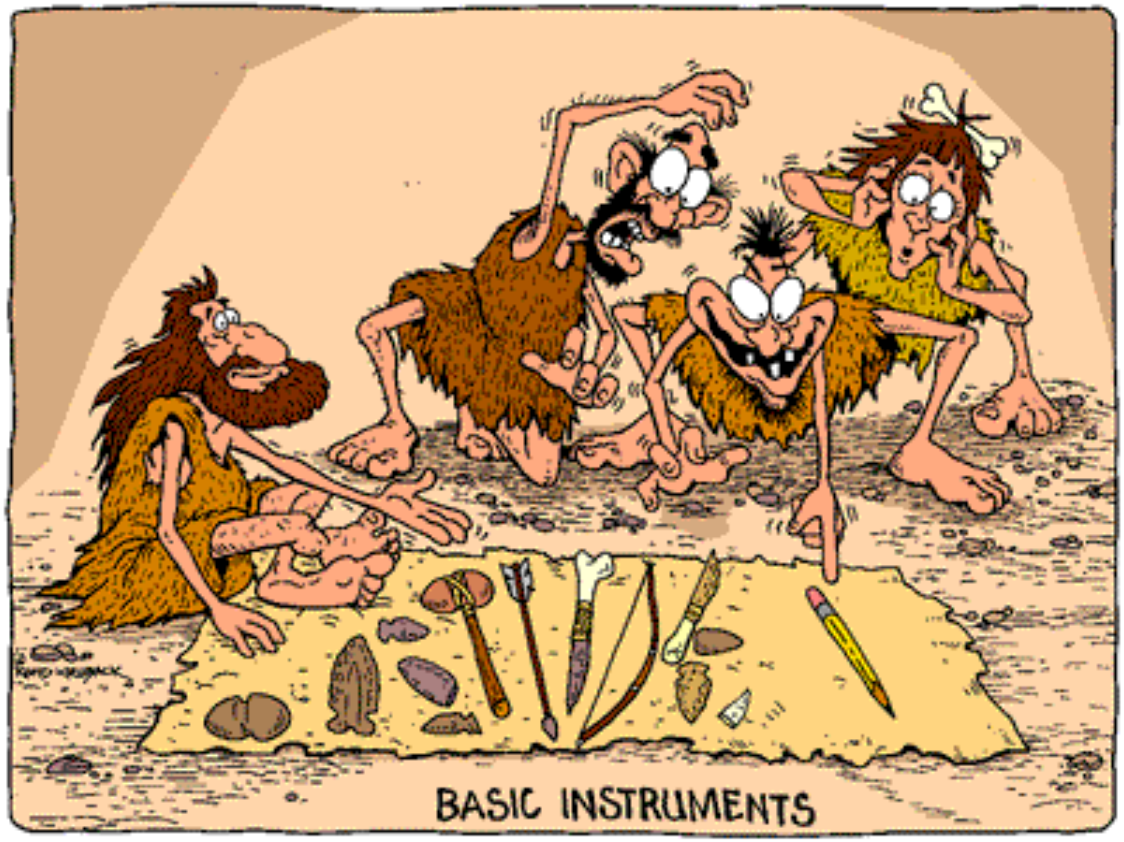

CIRCUIT ANALYSIS INTRODUCTION & NODAL ANALYSIS I

© Fred Terry
Winter, 2010

Introduction

- **Objectives:**
  - **Given a linear circuit, find <u>all the voltage drops</u> or find <u>all the current flows</u> (note that since one can be found from the other, this is <u>everything</u>)**
  - **Do This As Systematically and Efficiently As Possible**

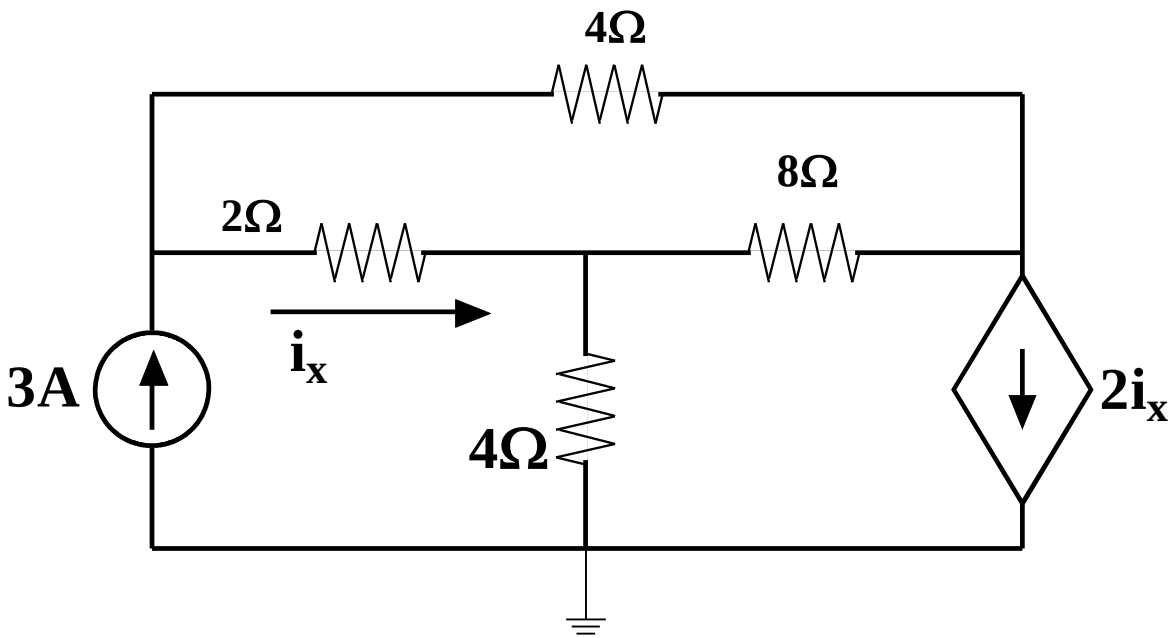

Introduction

- **Objectives:**
  - **Given a linear circuit, find <u>all the voltage drops</u> or find <u>all the current flows</u> (note that since one can be found from the other, this is <u>everything</u>)**
  - **Do This As Systematically and Efficiently As Possible**

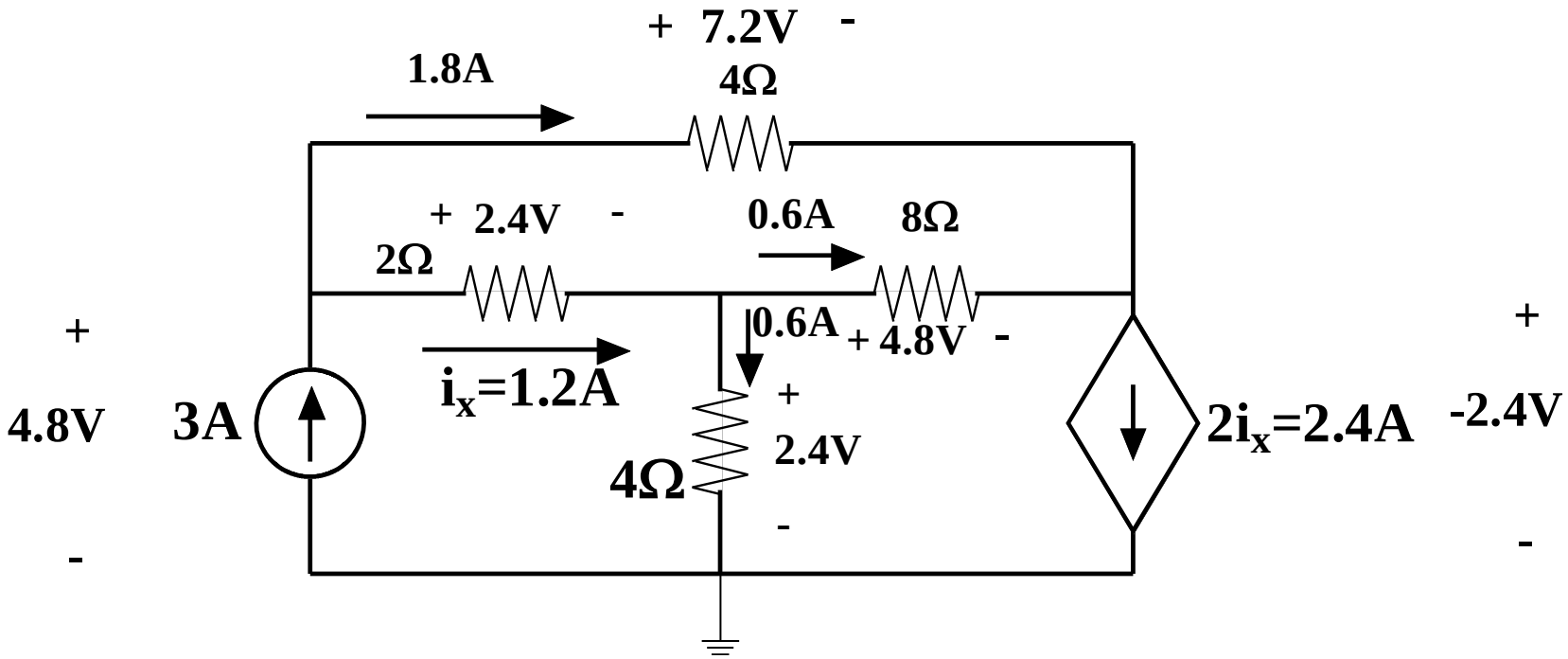

Using What We Know So Far

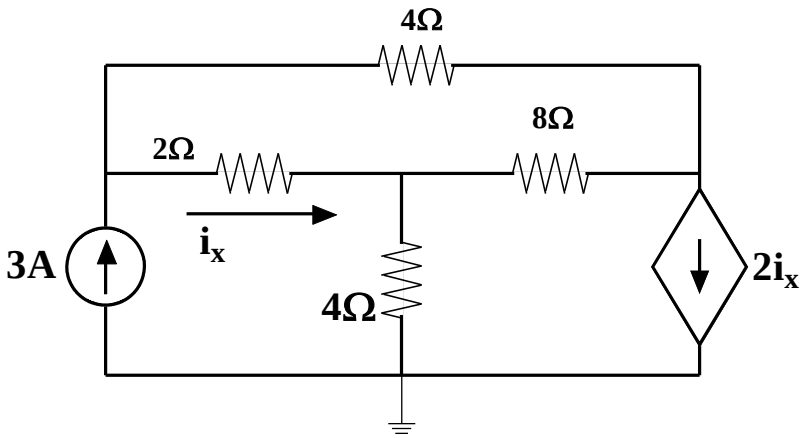

Using What We Know So Far

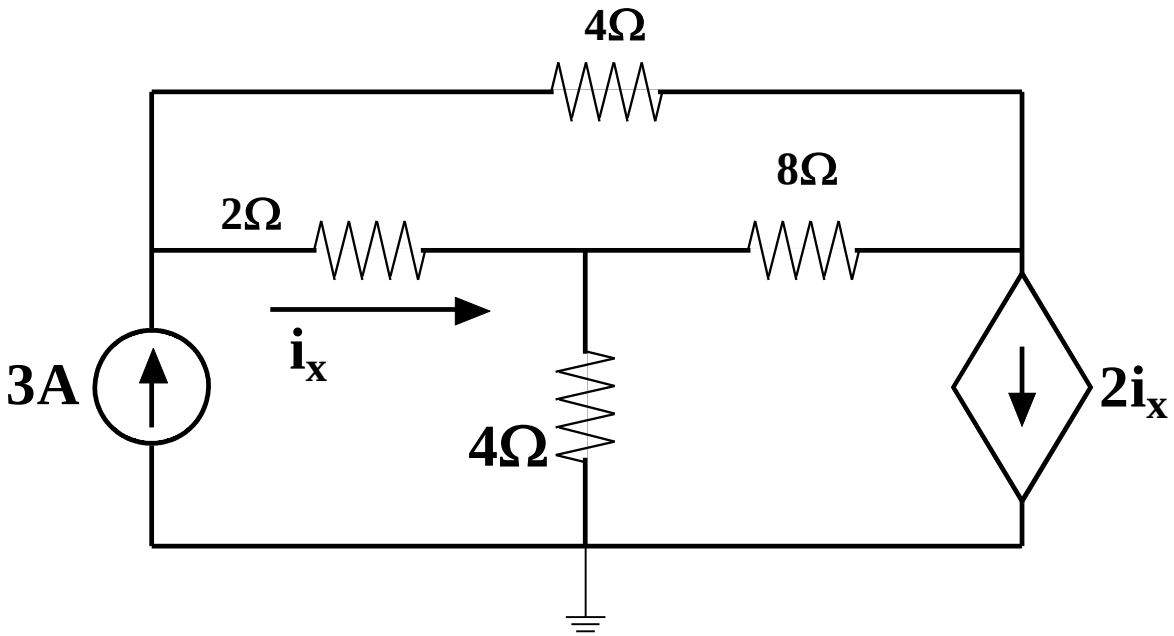

Methods

- **Nodal** and Mesh Analysis Provide Straight-Forward, Systematic Ways of Doing This by Generating n-equations with n-unknowns (where n is either node voltages or mesh currents, which we will now define and examine)
- Both are efficient, systematic methods to combine Element & Connection constraints
- Nodal Analysis is more general than Mesh Analysis. It will handle Any Linear Circuit and is the Standard Method Used in Circuit Simulators (such as Spice).
- Mesh Analysis Is Sometimes Simpler for Planar Circuits
  - We Will Cover This Too

Nodal Analysis

- Define one node of the circuit as the reference node or Ground. Consider this voltage as zero. Call it node 0.
- Label the non-ground nodes 1 to n-1 (for an n-node circuit). We will calculate the Node Voltages (the potential differences between each of these nodes and ground.
- Use KCL and Ohm's Law to write KCL equations at each of the n-1 non-reference nodes. This generates the n-1 simultaneous equations for the n-1 node voltages
- Solve the simultaneous KCL/Nodal Equations for V_1 to V_{n-1}, the node voltages
- Let's look at a simple example

Nodal Analysis Example

- Find all the node voltages in the circuit at left
- Label the Non-trivial nodes
- Write KCL equations at each labeled node
- Solve the resulting system of linear equations

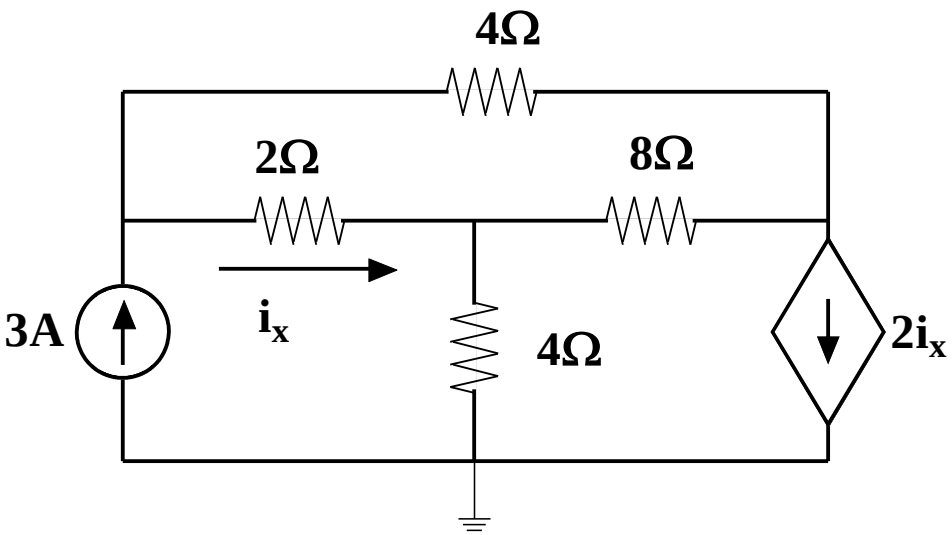

Label Nodes &Write KCL Equations & What Do the Nodal Voltages Mean?

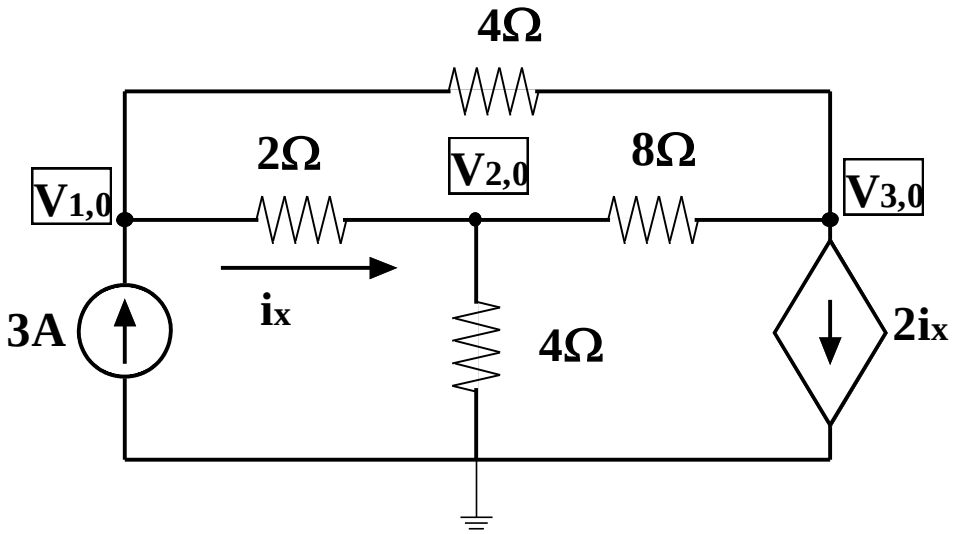

Label Nodes &Write KCL Equations

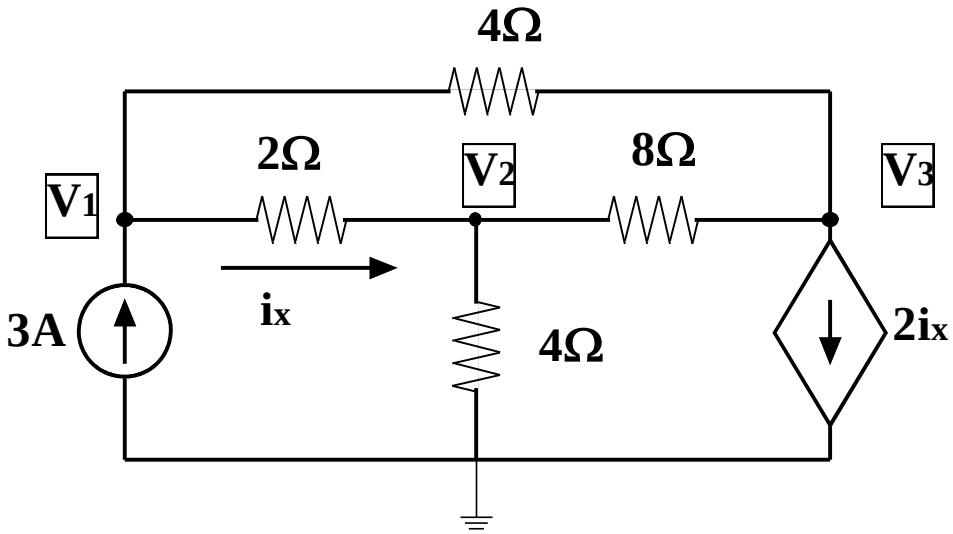

Label Nodes &Write KCL Equations

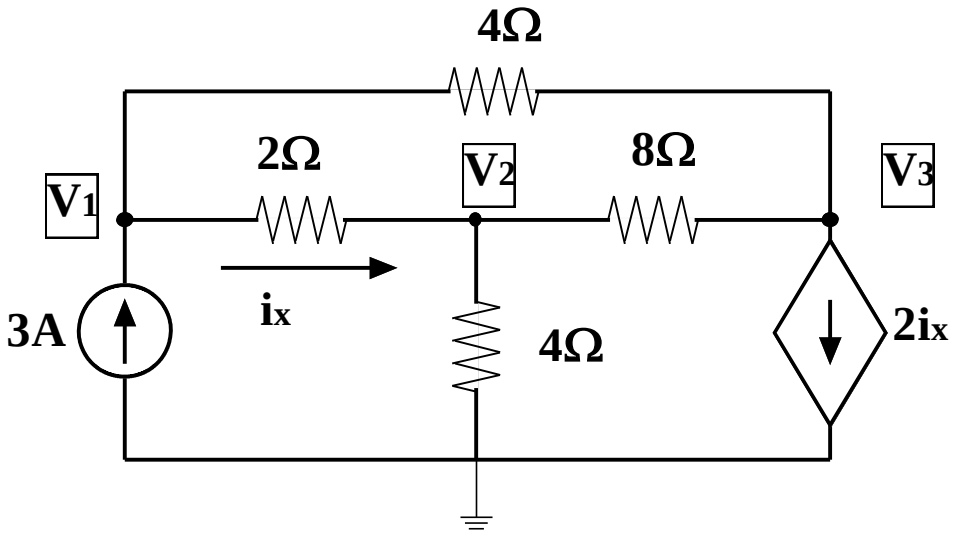

Label Nodes & Write KCL Equations

Node 1 $\boxed{\sum I_{out-of-node} = 0}$

$$-3A + \frac{(V_1 - V_2)}{2\Omega} + \frac{(V_1 - V_3)}{4\Omega} = 0$$

Rearrange:

$$\left(\frac{1}{2\Omega} + \frac{1}{4\Omega}\right)V_1 + \left(\frac{-1}{2\Omega}\right)V_2 + \left(\frac{-1}{4\Omega}\right)V_3 = 3A$$

$$\left(0.75\Omega^{-1}\right)V_1 + \left(-0.5\Omega^{-1}\right)V_2 + \left(-0.25\Omega^{-1}\right)V_3 = 3A$$

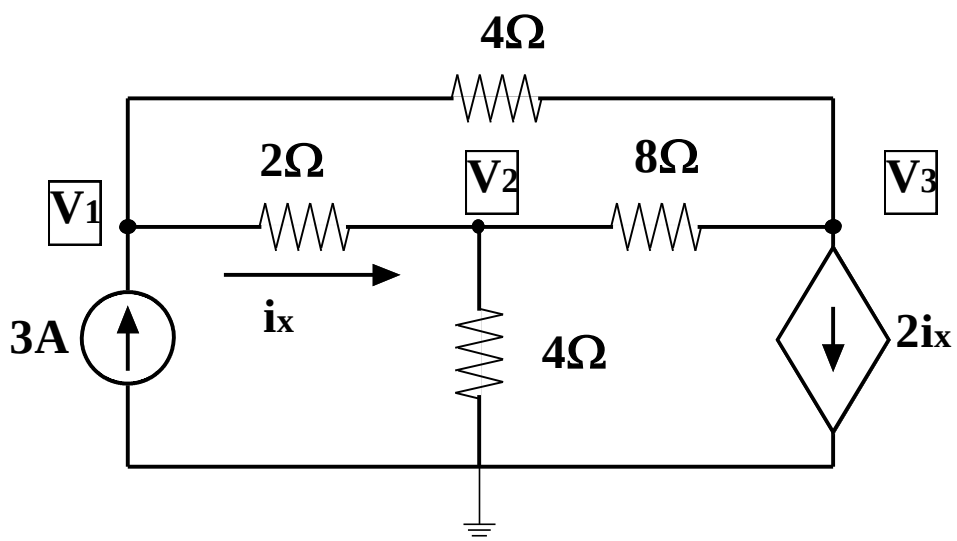

Note in this form (last line of above):

$$\boxed{\sum I_{into_node} = \sum I_{out_of_node}}$$

Finish Node Equations

Node 2

$$\frac{(V_2 - V_1)}{2\Omega} + \frac{(V_2 - 0)}{4\Omega} + \frac{(V_2 - V_3)}{8\Omega} = 0$$

$$\left(-0.5\Omega^{-1}\right)V_1 + \left(0.875\Omega^{-1}\right)V_2 + \left(-0.125\Omega^{-1}\right)V_3 = 0$$

Note that at node 2 there are no sources so the RHS is 0

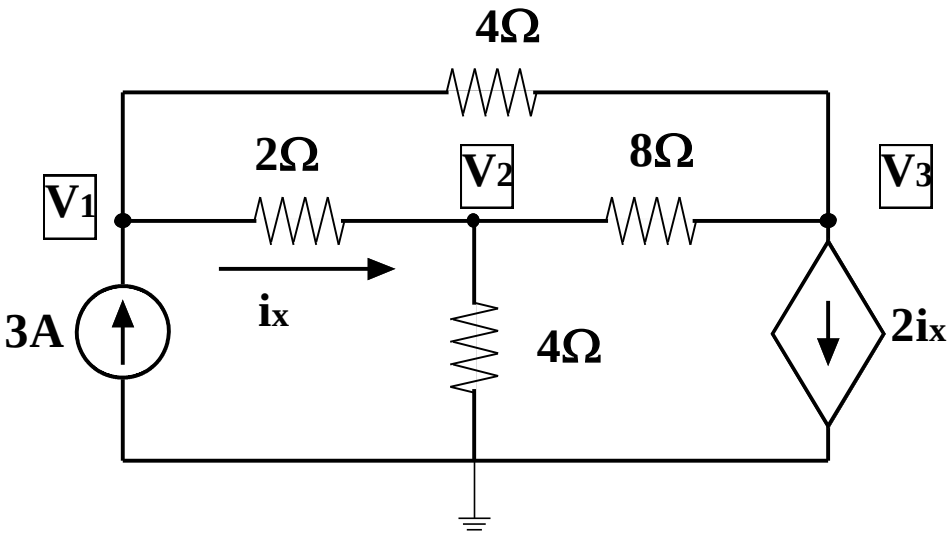

Node 3

$$\frac{(V_3 - V_1)}{4\Omega} + \frac{(V_3 - V_2)}{8\Omega} = -2i_x$$

$$i_x = \frac{(V_1 - V_2)}{2\Omega}$$

$$\frac{(V_3 - V_1)}{4\Omega} + \frac{(V_3 - V_2)}{8\Omega} = -2\left[\frac{(V_1 - V_2)}{2\Omega}\right] = \frac{(V_2 - V_1)}{1\Omega}$$

$$\left(0.75\Omega^{-1}\right)V_1 + \left(-1.125\Omega^{-1}\right)V_2 + \left(0.375\Omega^{-1}\right)V_3 = 0$$

Collect Equations and Solve

$$\left(+0.750\Omega^{-1}\right)V_1+\left(-0.500\Omega^{-1}\right)V_2+\left(-0.250\Omega^{-1}\right)V_3=3A$$
$$\left(-0.500\Omega^{-1}\right)V_1+\left(0.875\Omega^{-1}\right)V_2+\left(-0.125\Omega^{-1}\right)V_3=0A$$
$$\left(+0.750\Omega^{-1}\right)V_1+\left(-1.125\Omega^{-1}\right)V_2+\left(+0.375\Omega^{-1}\right)V_3=0A$$

- 3 Nodal Equations with the 3 NODE VOLTAGES AS THE ONLY UNKNOWNS
- Could Solve by Successive Substitutions to eliminate variables or by matrix methods

5¢'s Worth of Linear Algebra

Take nicely ordered linear equations:

$$\left(+0.750\Omega^{-1}\right)V_1+\left(-0.500\Omega^{-1}\right)V_2+\left(-0.250\Omega^{-1}\right)V_3=3A$$
$$\left(-0.500\Omega^{-1}\right)V_1+\left(0.875\Omega^{-1}\right)V_2+\left(-0.125\Omega^{-1}\right)V_3=0A$$
$$\left(+0.750\Omega^{-1}\right)V_1+\left(-1.125\Omega^{-1}\right)V_2+\left(+0.375\Omega^{-1}\right)V_3=0A$$

Convert to Matrix/Column Vector Form:

$$\begin{bmatrix} 0.75 & -0.5 & -0.25 \\ -0.5 & 0.875 & -0.125 \\ 0.75 & -1.125 & 0.375 \end{bmatrix}\begin{bmatrix} V_1 \\ V_2 \\ V_3 \end{bmatrix}=\begin{bmatrix} 3 \\ 0 \\ 0 \end{bmatrix}$$

$$\overleftrightarrow{G}\bullet\vec{V}=\vec{I}$$

$$\Rightarrow\vec{V}=\left(\overleftrightarrow{G}\right)^{-1}\bullet\vec{I}$$

Note that **G** (matrix) has units of Ω^{-1}, **V** (vector) has units of Volts, and **I** (vector) has units of Amps

Solve

$$\begin{bmatrix} 0.75 & -0.5 & -0.25 \\ -0.5 & 0.875 & -0.125 \\ 0.75 & -1.125 & 0.375 \end{bmatrix} \begin{bmatrix} V_1 \\ V_2 \\ V_3 \end{bmatrix} = \begin{bmatrix} 3 \\ 0 \\ 0 \end{bmatrix}$$

Solving (Matlab, Mathematica, Calculator) Yields:

$$\begin{bmatrix} V_1 \\ V_2 \\ V_3 \end{bmatrix} = \begin{bmatrix} 0.75 & -0.5 & -0.25 \\ -0.5 & 0.875 & -0.125 \\ 0.75 & -1.125 & 0.375 \end{bmatrix}^{-1} \bullet \begin{bmatrix} 3 \\ 0 \\ 0 \end{bmatrix} = \begin{bmatrix} 4.8 \\ 2.4 \\ -2.4 \end{bmatrix}$$

We don't Need it for anything, but for the curious:

$$\begin{bmatrix} 0.75 & -0.5 & -0.25 \\ 0.5 & -0.875 & 0.125 \\ 0.75 & -1.125 & 0.375 \end{bmatrix}^{-1} = \left(\frac{1}{3}\right) \begin{bmatrix} 4.8 & 12 & 7.2 \\ 2.4 & 12 & 5.6 \\ -2.4 & 12 & 10.4 \end{bmatrix}$$

WARNING: One "Little Error in Equations and/or Matrix Makes for BIG Errors in Final Answer

Error Example

Suppose we made one sign error in the equation or matrix set up and solved:

$$\begin{bmatrix} 0.75 & 0.5 & -0.25 \\ -0.5 & 0.875 & -0.125 \\ 0.75 & -1.125 & 0.375 \end{bmatrix} \begin{bmatrix} V_1 \\ V_2 \\ V_3 \end{bmatrix} = \begin{bmatrix} 3 \\ 0 \\ 0 \end{bmatrix}$$

We get:

$$\begin{bmatrix} V_1 \\ V_2 \\ V_3 \end{bmatrix} = \left(\frac{1}{3}\right) \begin{bmatrix} 8 \\ 4 \\ -4 \end{bmatrix} \approx \begin{bmatrix} 2.66667 \\ 1.33333 \\ -1.33333 \end{bmatrix}$$

Result looks innocent, but is completely wrong. These voltages will not satisfy KCL at the nodes!

Node Voltages, Element Voltage Drops, Currents

- Basic KVL (Difference Equations) to Get Element Voltage Drops
- Element Constraints & KCL to Get Branch Currents

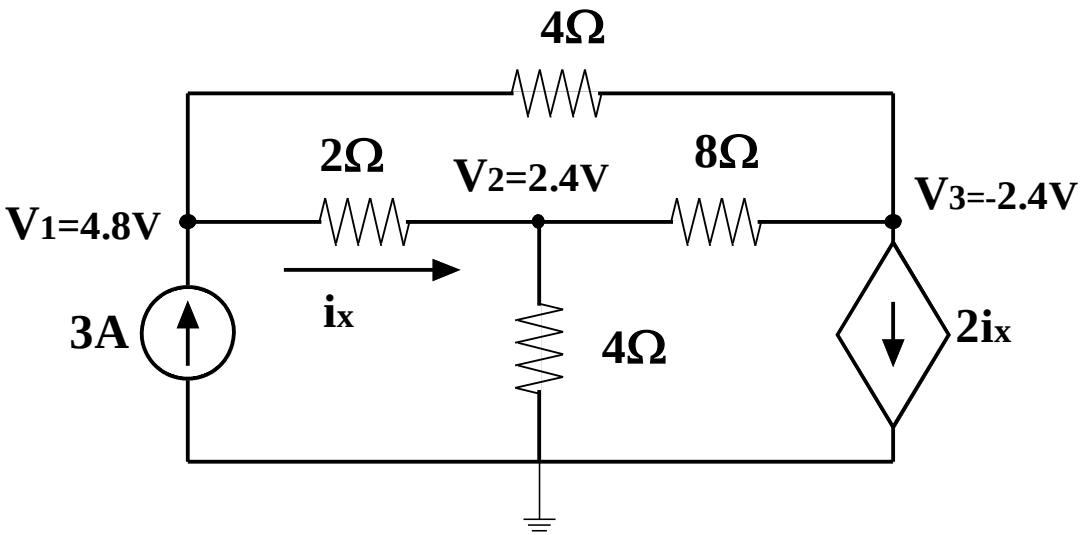
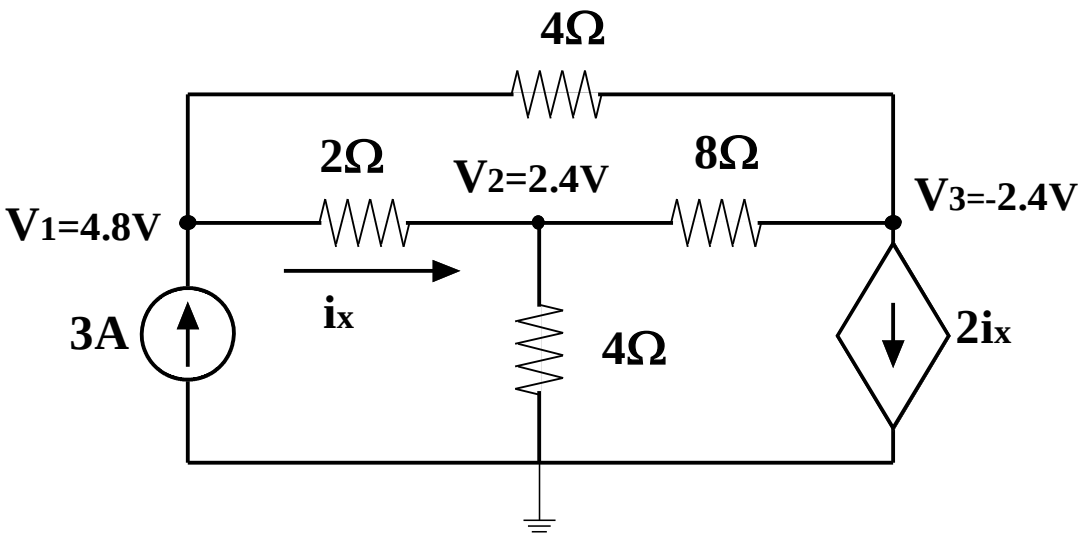
Node Voltages, Element Voltage Drops, Currents