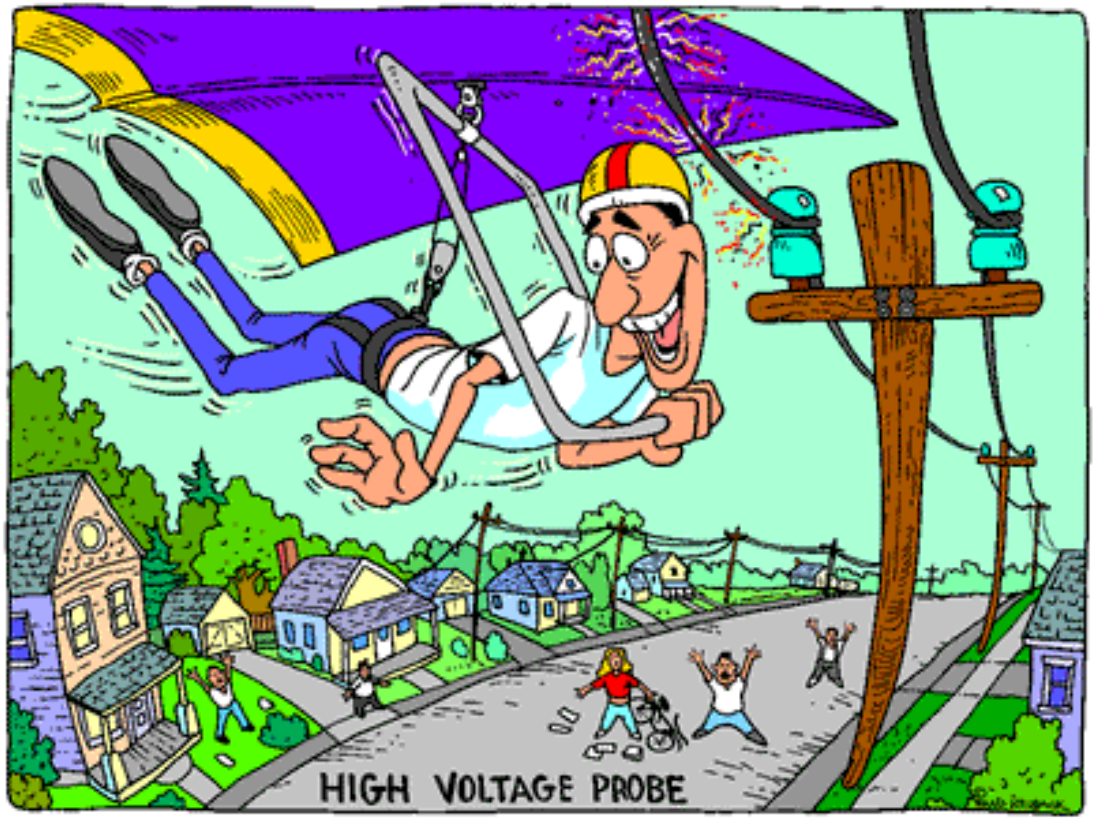

NODAL ANALYSIS II: VOLTAGE SOURCES AND SUPER-NODES

© Fred Terry
Winter, 2010

Two Cases

- Voltage Source Between Reference/Ground and 2nd Node
- Voltage Source Between 2 Non-Reference Nodes
  - Supernode

Nodal Analysis Example: Voltage Source to Ground

- Find all the node voltages in the circuit at left
- Label the Non-trivial nodes
- Write KCL equations at each labeled node
- Solve the resulting system of linear equations

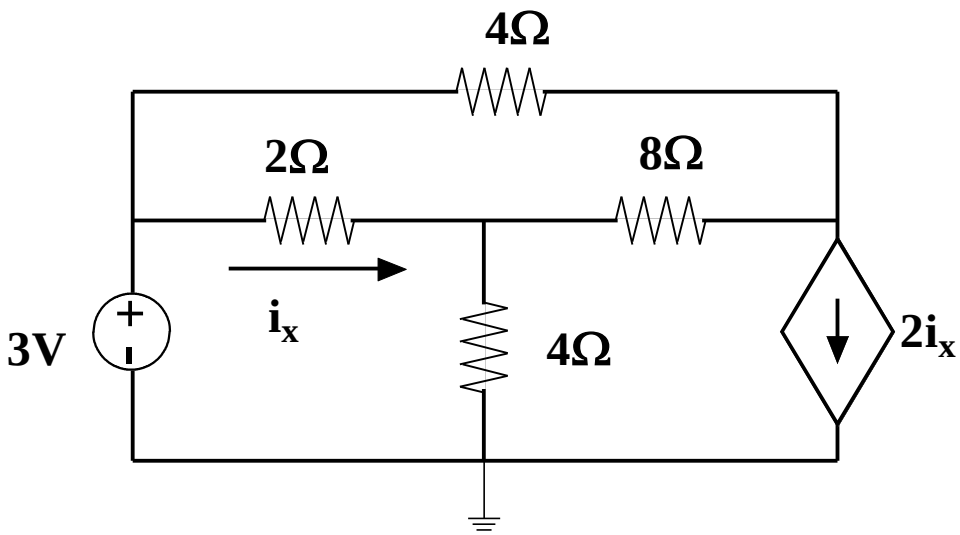

Label Nodes &Write KCL Equations

- V_1=3V
  - NO KCL EQUATION FOR THIS NODE
  - WHY????

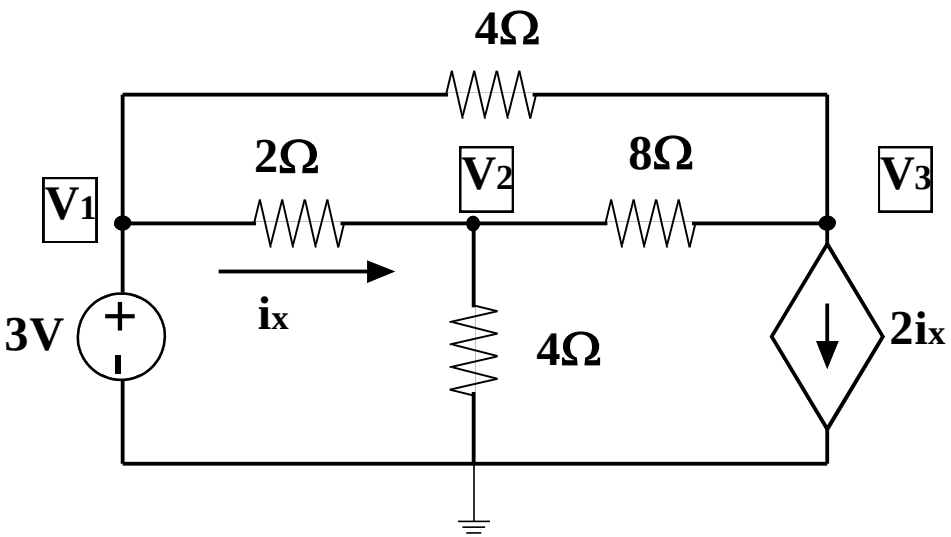

KCL Equations for Other 2 Nodes

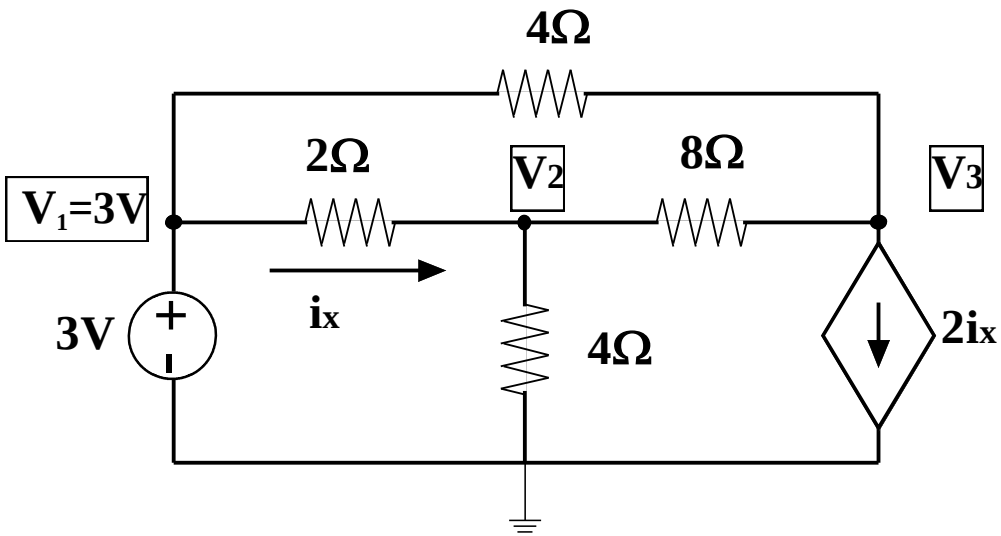

KCL Equations for Other 2 Nodes

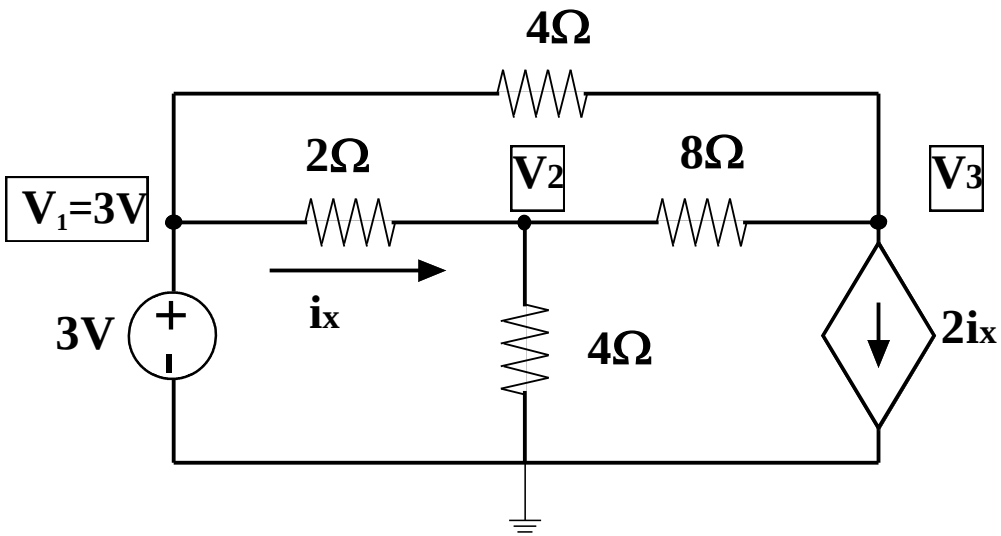

KCL Equations for Other 2 Nodes

KCL: Node 2

$$V_2\left[\frac{1}{2\Omega}+\frac{1}{4\Omega}+\frac{1}{8\Omega}\right]+V_3\left[-\frac{1}{8\Omega}\right]=V_1\left[\frac{1}{2\Omega}\right]=1.5A$$

KCL: Node 3

$$V_2\left[\frac{-1}{8\Omega}\right]+V_3\left[\frac{1}{8\Omega}+\frac{1}{4\Omega}\right]+2i_x=V_1\left[\frac{1}{4\Omega}\right]=0.75A$$

$$i_x=\left[\frac{V_1-V_2}{2\Omega}\right]=1.5A-\left[\frac{V_2}{2\Omega}\right]$$

combining

$$V_2\left[\frac{-1}{8\Omega}+\frac{-1}{1\Omega}\right]+V_3\left[\frac{1}{8\Omega}+\frac{1}{4\Omega}\right]=-2.25A$$

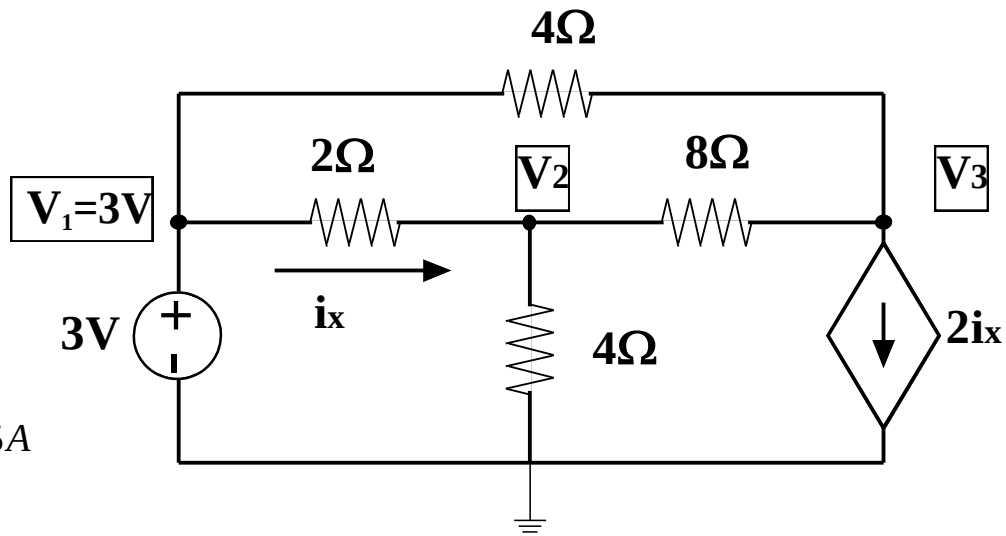

Collect Equations and Solve

$$\left(0.875\Omega^{-1}\right)V_2 + \left(-0.125\Omega^{-1}\right)V_3 = 1.5A$$

$$\left(-1.125\Omega^{-1}\right)V_2 + \left(+0.0.375\Omega^{-1}\right)V_3 = -2.25A$$

- 2 Nodal Equations with the 2 NODE VOLTAGES AS THE ONLY UNKNOWNS
- Answers:
  - V_2= +1.5V
  - V_3= -1.5V

Derive Current Flows

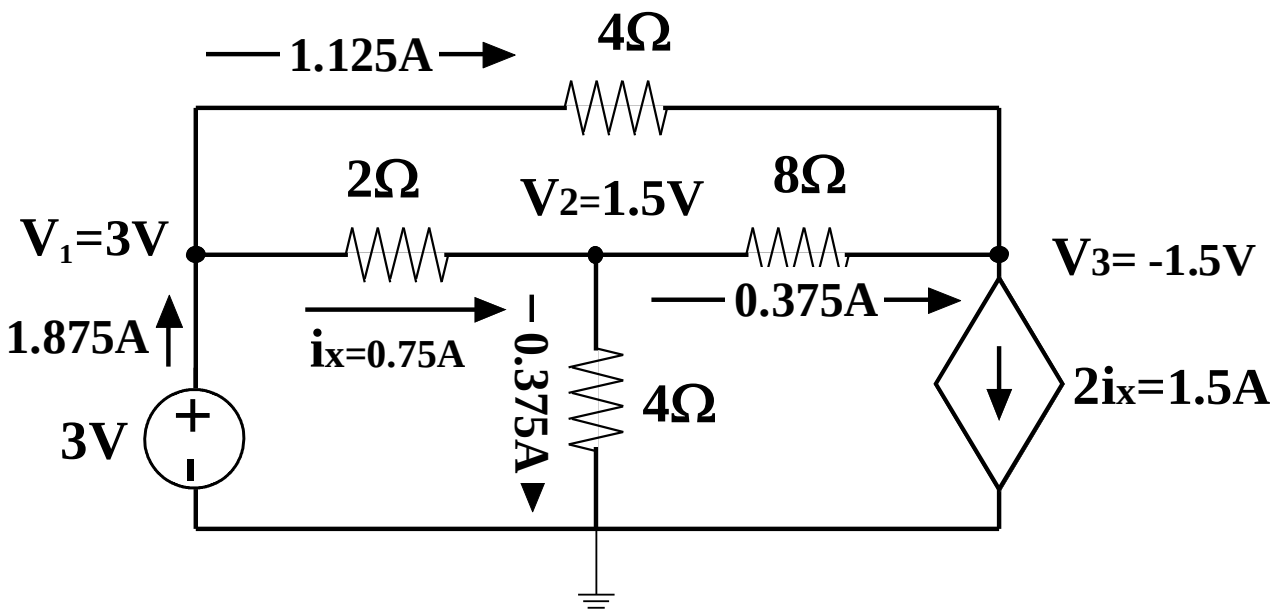

Extension: Equivalent Circuit Modeling

- Model the Circuit "seen" at nodes a&b
- V-I Characteristics

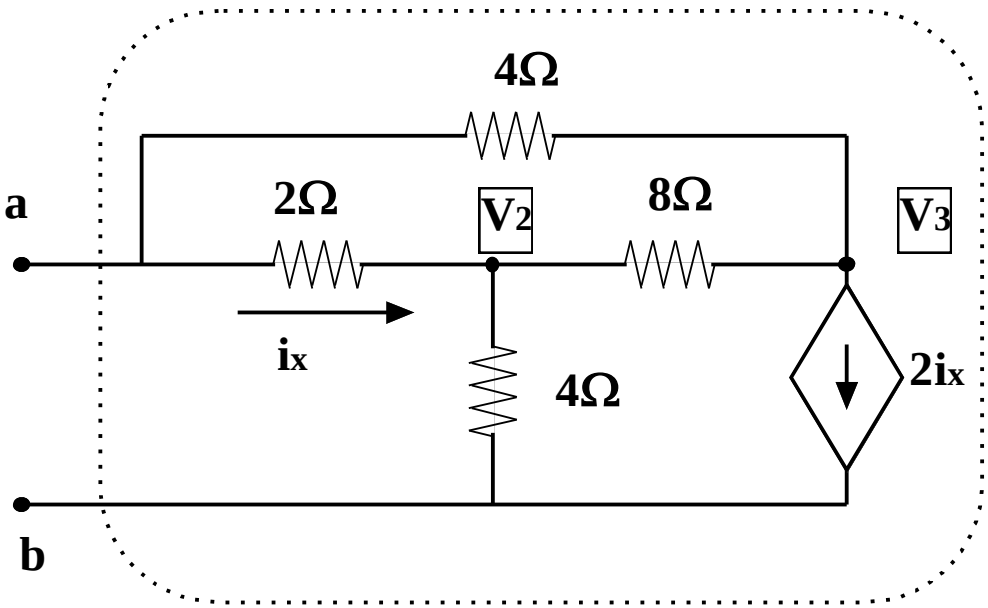

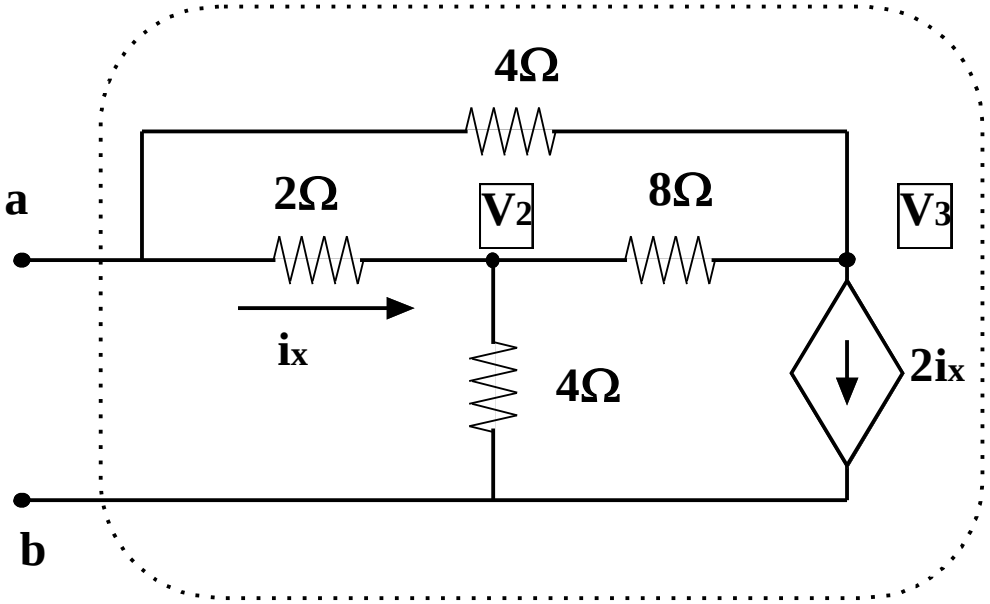
4Ω
a
2Ω
V2
8Ω
V3
ix
4Ω
2ix
b

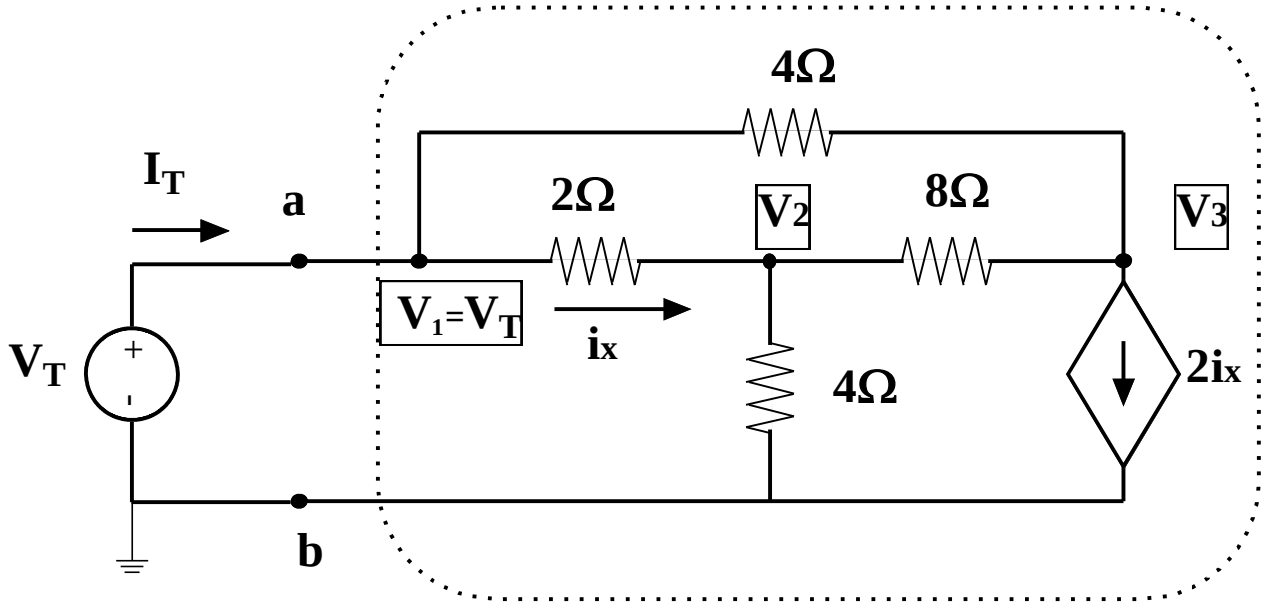

KCL: Node 2

$$V_2\left[\frac{1}{2\Omega}+\frac{1}{4\Omega}+\frac{1}{8\Omega}\right]+V_3\left[-\frac{1}{8\Omega}\right]=V_1\left[\frac{1}{2\Omega}\right]=V_T\left[\frac{1}{2\Omega}\right]$$

KCL: Node 3

$$V_2\left[\frac{-1}{8\Omega}\right]+V_3\left[\frac{1}{8\Omega}+\frac{1}{4\Omega}\right]+2i_x=V_1\left[\frac{1}{4\Omega}\right]=V_T\left[\frac{1}{4\Omega}\right]$$

$$i_x=\left[\frac{V_1-V_2}{2\Omega}\right]=\left[\frac{V_T-V_2}{2\Omega}\right]$$

combining

$$V_2\left[\frac{-1}{8\Omega}+\frac{-1}{1\Omega}\right]+V_3\left[\frac{1}{8\Omega}+\frac{1}{4\Omega}\right]=V_T\left[-\frac{3}{4\Omega}\right]$$

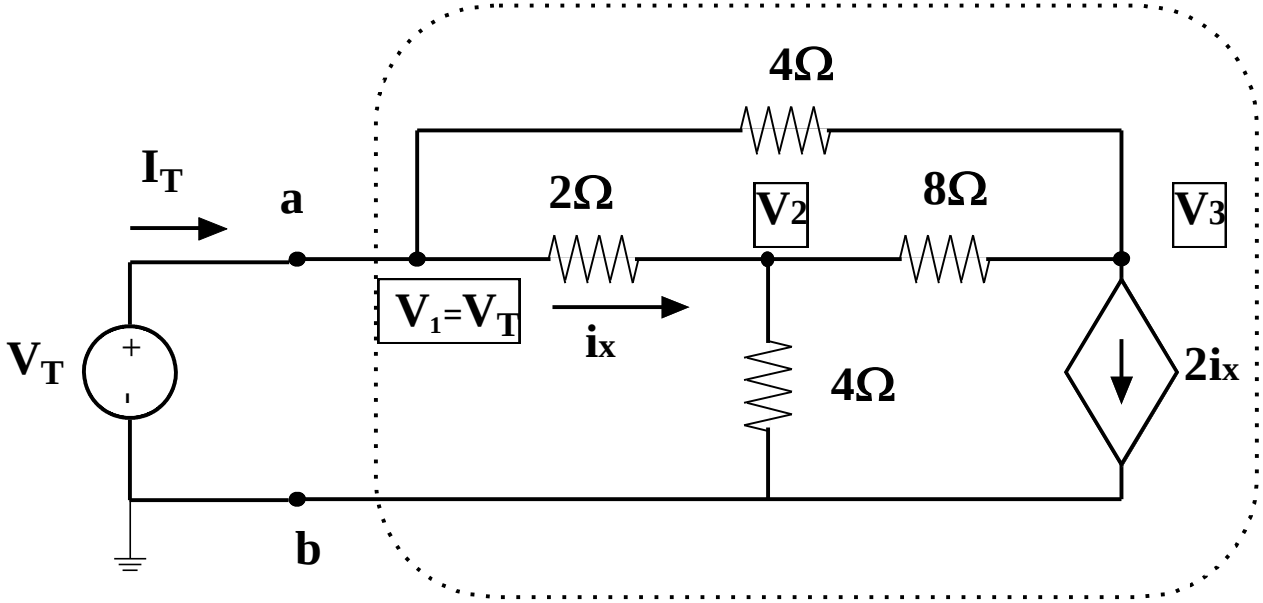

$$\underbrace{\begin{bmatrix} 7/8 & -1/8 \\ -9/8 & 3/8 \end{bmatrix}}_{\Omega^{-1}} \begin{bmatrix} V_2 \\ V_3 \end{bmatrix} = \underbrace{\begin{bmatrix} 1/2 \\ -3/4 \end{bmatrix}}_{\Omega^{-1}} V_T$$

$$\begin{bmatrix} V_2 \\ V_3 \end{bmatrix} = \begin{bmatrix} 0.5 \\ -0.5 \end{bmatrix} V_T$$

$$I_T = \left(\frac{V_T - V_2}{2\Omega} \right) + \left(\frac{V_T - V_3}{4\Omega} \right) = \left(\frac{V_T - 0.5V_T}{2\Omega} \right) + \left(\frac{V_T - \left(-0.5V_T\right)}{4\Omega} \right)$$

$$I_T = \frac{2.5}{4\Omega} V_T = \frac{5}{8\Omega} V_T$$

Looks Like A Linear Resistor!

$$R_{eq} = \frac{V_T}{I_T} = \frac{8}{5}\Omega = 1.6\Omega$$

Variation: Change One Resistor

KCL: Node 2

$$V_2\left[\frac{1}{2\Omega}+\frac{1}{6\Omega}+\frac{1}{8\Omega}\right]+V_3\left[-\frac{1}{8\Omega}\right]=V_1\left[\frac{1}{2\Omega}\right]=1.5A$$

KCL: Node 3

$$V_2\left[\frac{-1}{8\Omega}\right]+V_3\left[\frac{1}{8\Omega}+\frac{1}{4\Omega}\right]+2i_x=V_1\left[\frac{1}{4\Omega}\right]=0.75A$$

$$i_x=\left[\frac{V_1-V_2}{2\Omega}\right]=1.5A-\left[\frac{V_2}{2\Omega}\right]$$

combining

$$V_2\left[\frac{-1}{8\Omega}+\frac{-1}{1\Omega}\right]+V_3\left[\frac{1}{8\Omega}+\frac{1}{4\Omega}\right]=-2.25A$$

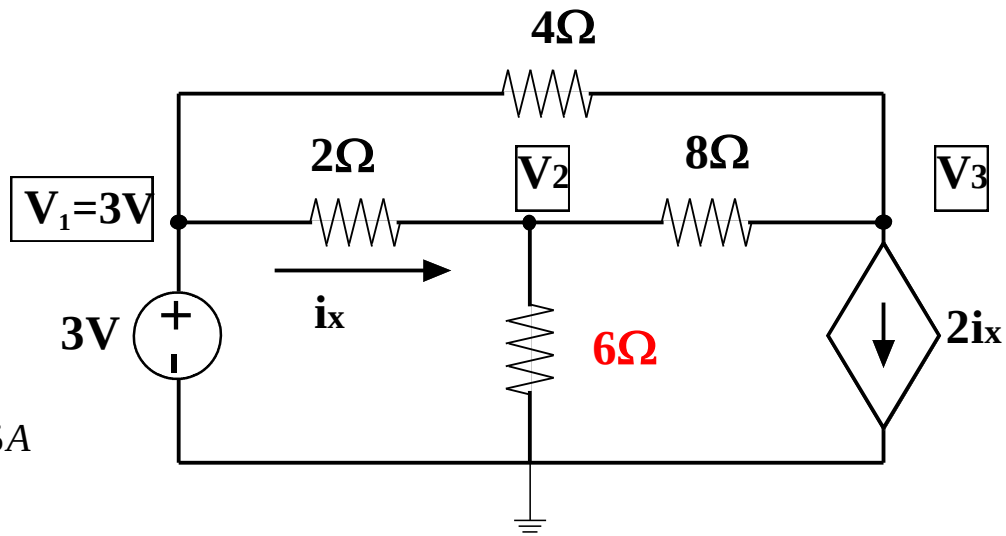

Results:

V_2=+1.8V

V_3=-0.6V

Case 2: Super-Node

- 2nd Voltage Source is not connected to ground
- Nodes 2&3 Now Linked as "Supernode"
- Only 1 Independent Node Voltage
  - V_2-V_3=1V
- Only 1 Meaningful KCL Equation for Combined 2-3 Supernode

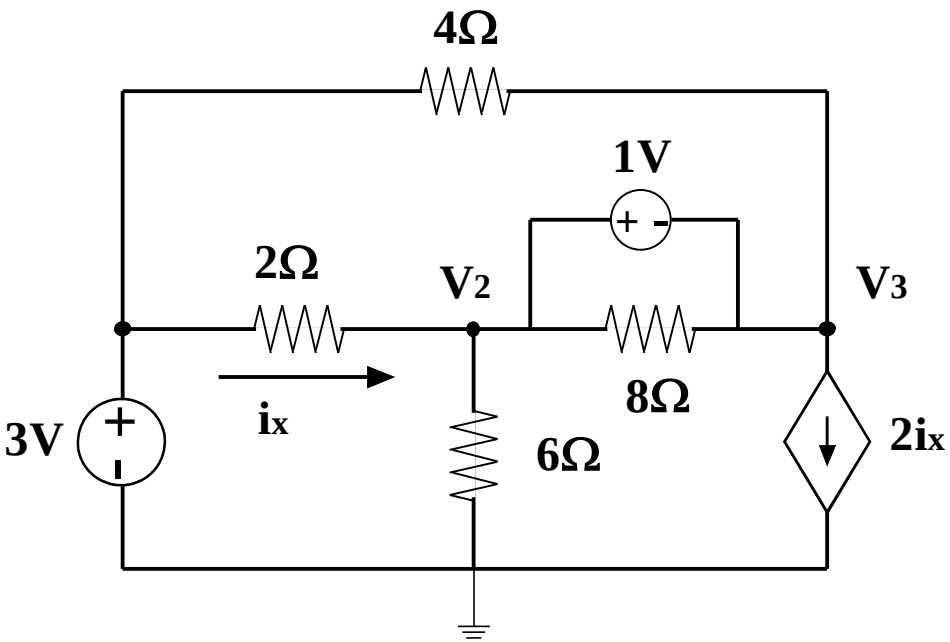

KCL at Super-Node: "Hard Way"

Independent Nodes Have Additional Unknown Source Current i_s

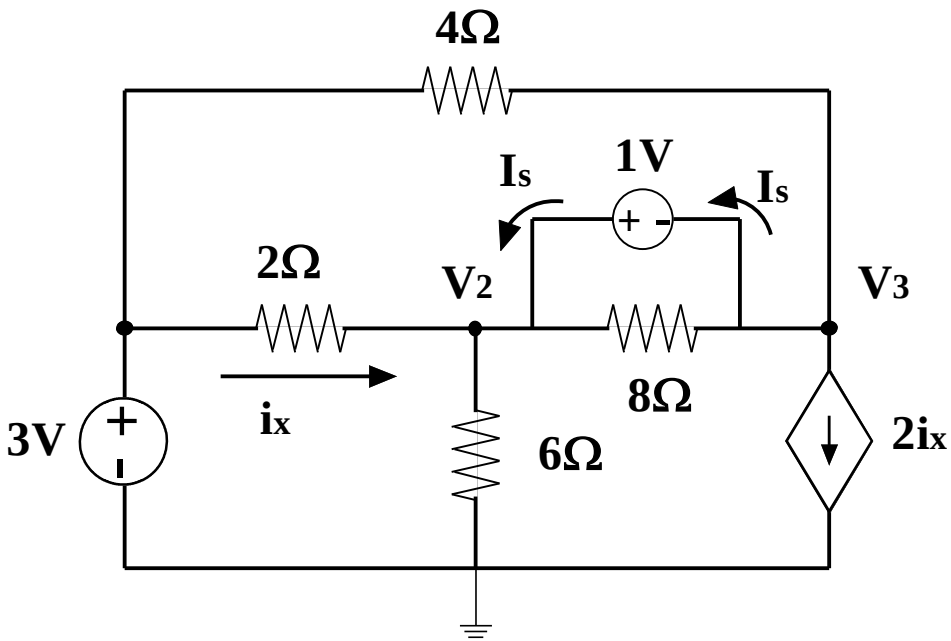

KCL Node 2:

$$\left[\frac{V_2 - 3V}{2\Omega}\right] + \left[\frac{V_2}{6\Omega}\right] + \left[\frac{V_2 - V_3}{8\Omega}\right] - I_s = 0$$

KCL Node 3:

$$\left[\frac{V_3 - 3V}{4\Omega}\right] + \left[\frac{V_3 - V_2}{8\Omega}\right] + 2i_x + I_s = 0$$

Dependent Source Element Constraint

$$2i_x = 2\left[\frac{3V - V_2}{2\Omega}\right] = \left[3A - \frac{V_2}{1\Omega}\right]$$

KVL Nodes 2-3/Constant Source Element Constraint:

$$V_2 - V_3 = 1V$$

Brute Force: 4 Linear Equations

KCL Node 2:

$$V_2\left[\frac{19}{24\Omega}\right]+V_3\left[-\frac{1}{8\Omega}\right]-I_s=1.5A$$

KCL Node 3:

$$V_2\left[-\frac{1}{8\Omega}\right]+V_3\left[\frac{3}{8\Omega}\right]+2i_x+I_s=0.75A$$

Dependent Source Element Constraint

$$V_2\left[\frac{1}{1\Omega}\right]+2i_x=3A$$

KVL Nodes 2-3/Constant Source Element Constraint:

$$V_2-V_3=1V$$

Brute Force

$$\left.\begin{aligned}
&V_2\left[\frac{19}{24\Omega}\right]+V_3\left[-\frac{1}{8\Omega}\right]+i_x[0]+I_s[-1]=1.5A\\
&V_2\left[-\frac{1}{8\Omega}\right]+V_3\left[\frac{3}{8\Omega}\right]+i_x[2]+I_s[1]=0.75A\\
&V_2\left[\frac{1}{1\Omega}\right]+V_3[0]+i_x[2]+I_s[0]=3A\\
&V_2[1]-V_3[1]+i_x[0]+I_s[0]=1V
\end{aligned}\right\}\text{4 Equations, 4 Unknowns } V_2, V_3, i_x, I_s$$

$$\begin{bmatrix}
\frac{19}{24\Omega} & -\frac{1}{8\Omega} & 0 & -1\\
-\frac{1}{8\Omega} & \frac{3}{8\Omega} & 2 & 1\\
\frac{1}{1\Omega} & 0 & 2 & 0\\
1 & -1 & 0 & 0
\end{bmatrix}
\begin{bmatrix} V_2\\ V_3\\ i_x\\ I_s \end{bmatrix}
=
\begin{bmatrix} 1.5A\\ 0.75A\\ 3A\\ 1V \end{bmatrix}
\Rightarrow
\begin{bmatrix} V_2\\ V_3\\ i_x\\ I_s \end{bmatrix}
=
\begin{bmatrix} 6V\\ 5V\\ -3/2\,A\\ 21/8A \end{bmatrix}$$

KCL at Super-Node: Hard Way II

Independent Nodes Have Additional Unknown Source Current i_s

$$Node_2:$$

$$\left[\frac{V_2-3V}{2\Omega}\right]+\left[\frac{V_2}{6\Omega}\right]+\left[\frac{V_2-V_3}{8\Omega}\right]-I_s=0$$

$$Node_3:$$

$$\left[\frac{V_3-3V}{4\Omega}\right]+\left[\frac{V_3-V_2}{8\Omega}\right]+2i_x+I_s=0$$

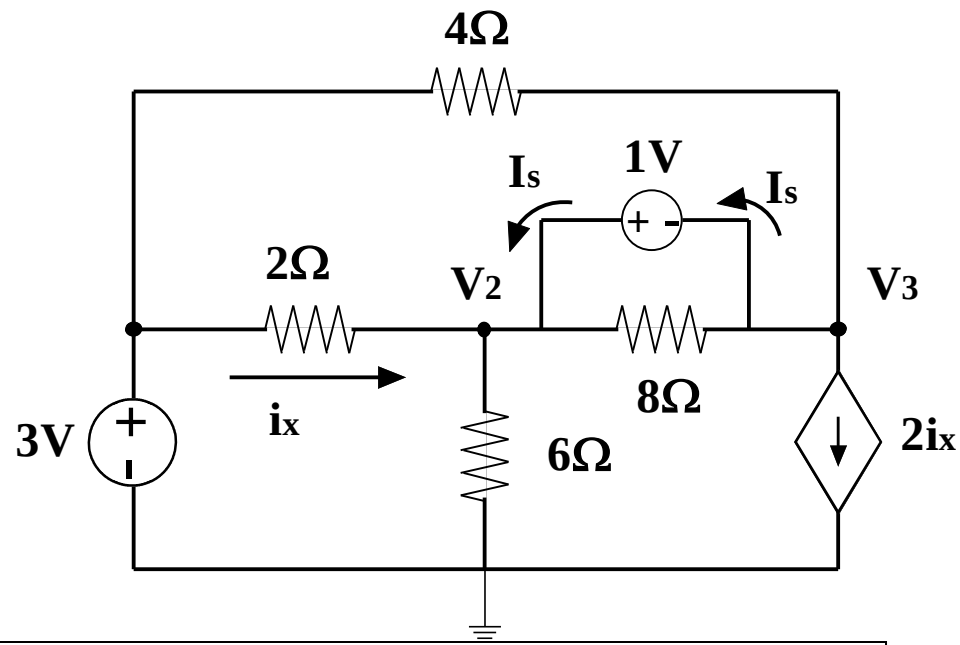

Use i_x constraint &

Combine Nodes 2&3 KCL⇒

$$V_2\left[\frac{1}{2\Omega}+\frac{1}{6\Omega}\right]+V_3\left[\frac{1}{4\Omega}\right]+2i_x=\left[\frac{3V}{2\Omega}+\frac{3V}{4\Omega}\right]=2.25A$$

$$V_2\left[\frac{1}{2\Omega}+\frac{1}{6\Omega}\right]+\left(V_2-1V\right)\left[\frac{1}{4\Omega}\right]+2\left[\frac{3V-V_2}{2\Omega}\right]=2.25A$$

$$V_2\left[\frac{-1}{12\Omega}\right]=-0.5A$$

$$V_2=+6V\Rightarrow V_3=+6V$$

KCL at Super-Node: Hard Way II

Independent Nodes Have Additional Unknown Source Current i_s

KCL Node 2:

$$\left[\frac{V_2-3V}{2\Omega}\right]+\left[\frac{V_2}{6\Omega}\right]+\left[\frac{V_2-V_3}{8\Omega}\right]-I_s=0$$

$$V_2\left[\frac{1}{2\Omega}+\frac{1}{6\Omega}+\frac{1}{8\Omega}\right]+V_3\left[\frac{-1}{8\Omega}\right]-I_s=\frac{3V}{2\Omega}$$

$$V_2\left[\frac{1}{2\Omega}+\frac{1}{6\Omega}+\frac{1}{8\Omega}\right]+\left(V_2-1V\right)\left[\frac{-1}{8\Omega}\right]-I_s=1.5A$$

KCL Node 3:

$$\left[\frac{V_3-3V}{4\Omega}\right]+\left[\frac{V_3-V_2}{8\Omega}\right]+2i_x+I_s=0$$

$$V_2\left[\frac{-1}{8\Omega}\right]+V_3\left[\frac{1}{8\Omega}\right]+2i_x=\left[-I_s+\frac{3V}{4\Omega}\right]$$

$$V_2\left[\frac{-1}{8\Omega}\right]+\left(V_2-1V\right)\left[\frac{1}{8\Omega}\right]+2i_x=\left[-I_s+\frac{3V}{4\Omega}\right]$$

$$V_2\left[\frac{-1}{8\Omega}\right]+\left(V_2-1V\right)\left[\frac{1}{8\Omega}\right]+2\left[\frac{3V-V_2}{2\Omega}\right]=\left[-I_s+0.75A\right]$$

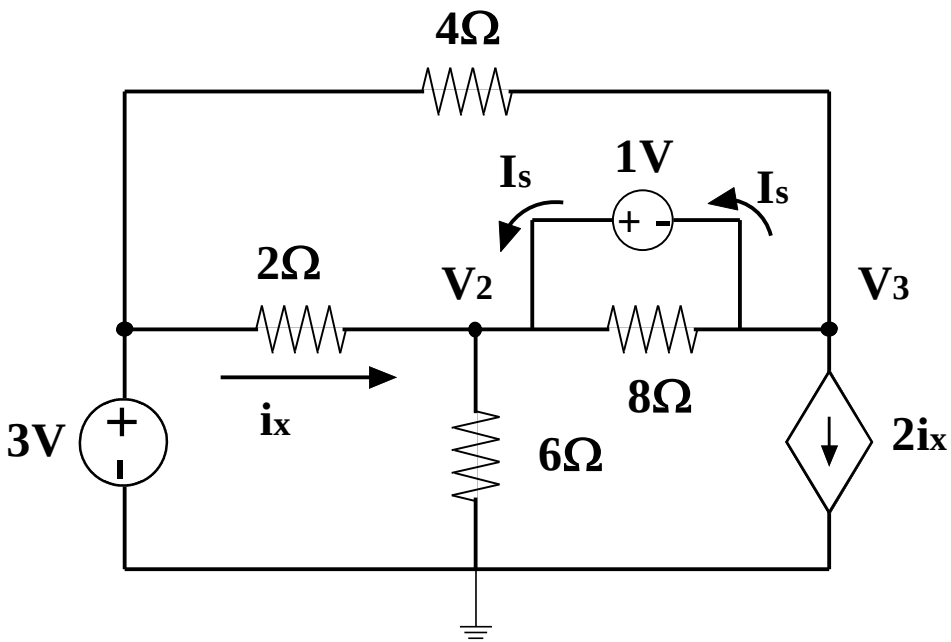

Combine Nodes 2&3 KCL⇒

$$V_2\left[\frac{1}{2\Omega}+\frac{1}{6\Omega}\right]+V_3\left[\frac{1}{4\Omega}\right]+2i_x=\left[\frac{3V}{2\Omega}+\frac{3V}{4\Omega}\right]=2.25A$$

$$V_2\left[\frac{1}{2\Omega}+\frac{1}{6\Omega}\right]+\left(V_2-1V\right)\left[\frac{1}{4\Omega}\right]+2\left[\frac{3V-V_2}{2\Omega}\right]=2.25A$$

$$V_2\left[\frac{-1}{12\Omega}\right]=-0.5A$$

$$V_2=+6V$$

KCL at Super-Node: Easy Way

Brute force works but is more work than we need to do to get node voltages

Yields more information but is less systematic & often more prone to errors

Better way:

Do KCL on Closed Surface Enclosing the Super-Node

Don't Worry About Current Into/Out of Source

This Gets Handled Automatically!

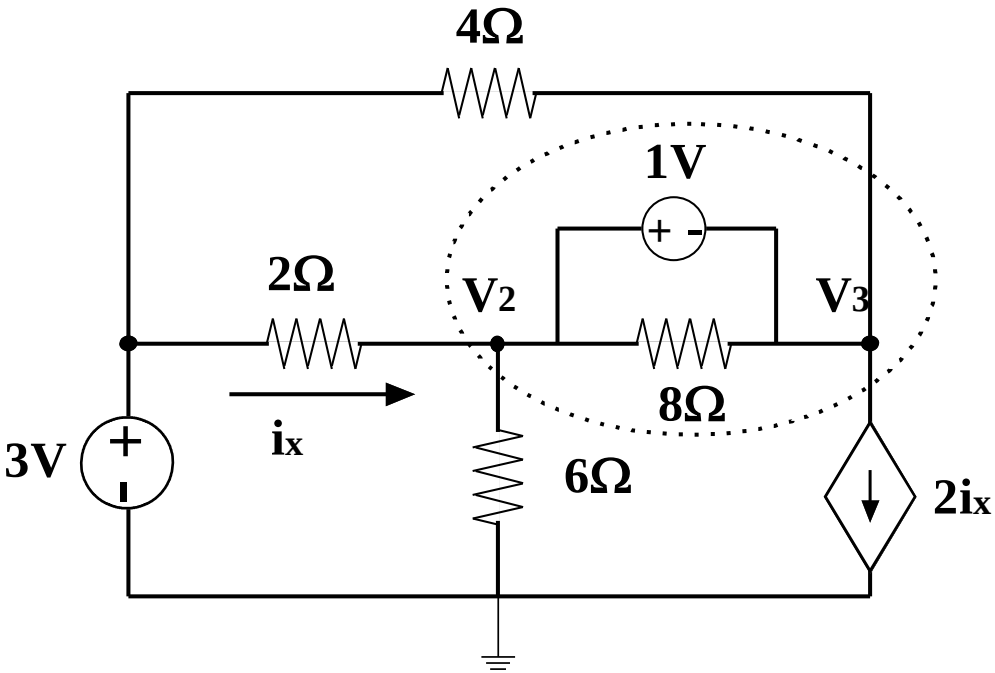

KCL at Super-Node: Easy Way

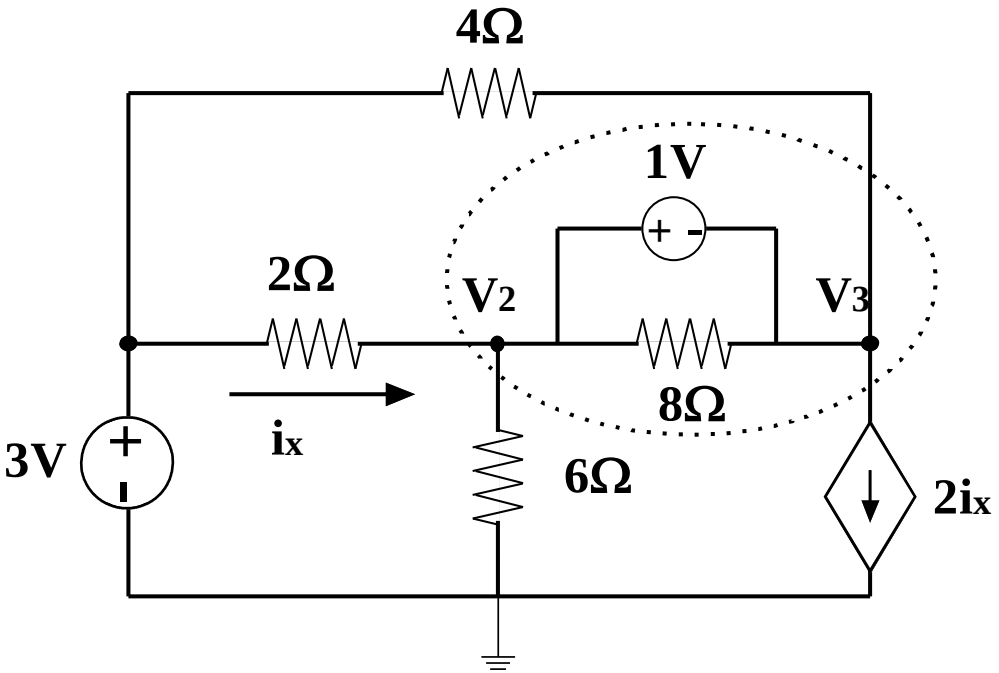

KCL at Super-Node: Easy Way

Do KCL on Closed Surface Enclosing the Super-Node

Don't Worry About Current Into/Out of Source

This Gets Handled Automatically!

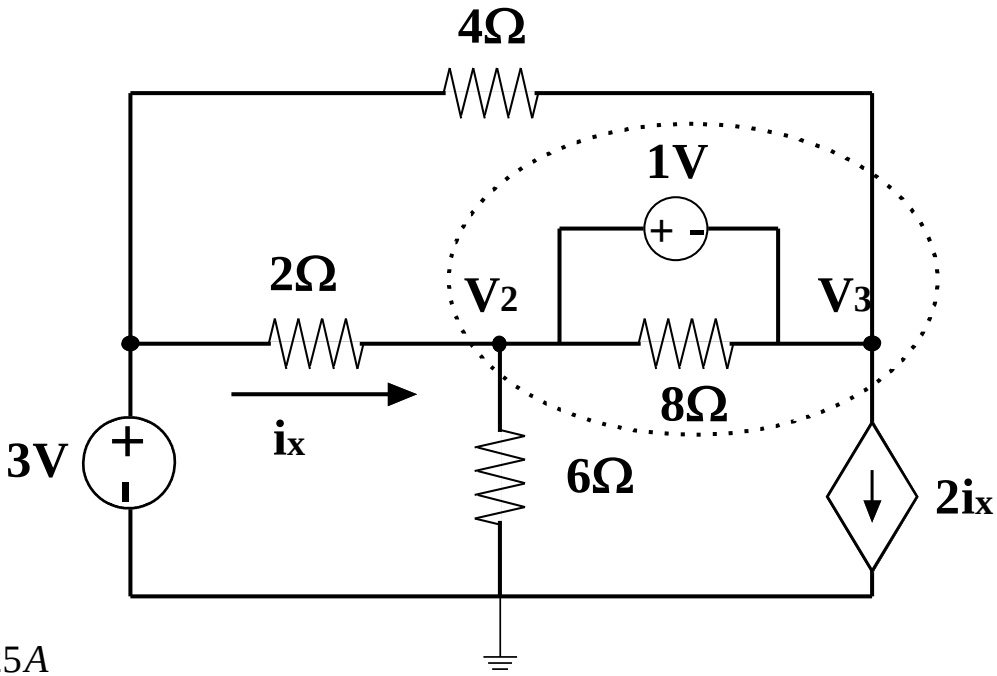

$$V_2\left[\frac{1}{2\Omega}+\frac{1}{6\Omega}\right]+V_3\left[\frac{1}{4\Omega}\right]+2i_x=\left[\frac{3V}{2\Omega}+\frac{3V}{4\Omega}\right]=2.25A$$

$$V_2\left[\frac{1}{2\Omega}+\frac{1}{6\Omega}\right]+\left(V_2-1V\right)\left[\frac{1}{4\Omega}\right]+2\left[\frac{3V-V_2}{2\Omega}\right]=2.25A$$

$$V_2\left[\frac{-1}{12\Omega}\right]=-0.5A$$

$$V_2=+6V$$

(Same Answer)/(LessWork) → Happier Engineer

Currents & Power

Element	Power Watts
3V Source	6
2 ohm	4.5
4 ohm	1
6 ohm	6
8 ohm	0.125
1V source	-2.625
$2i_x$ source	-15
sum	0

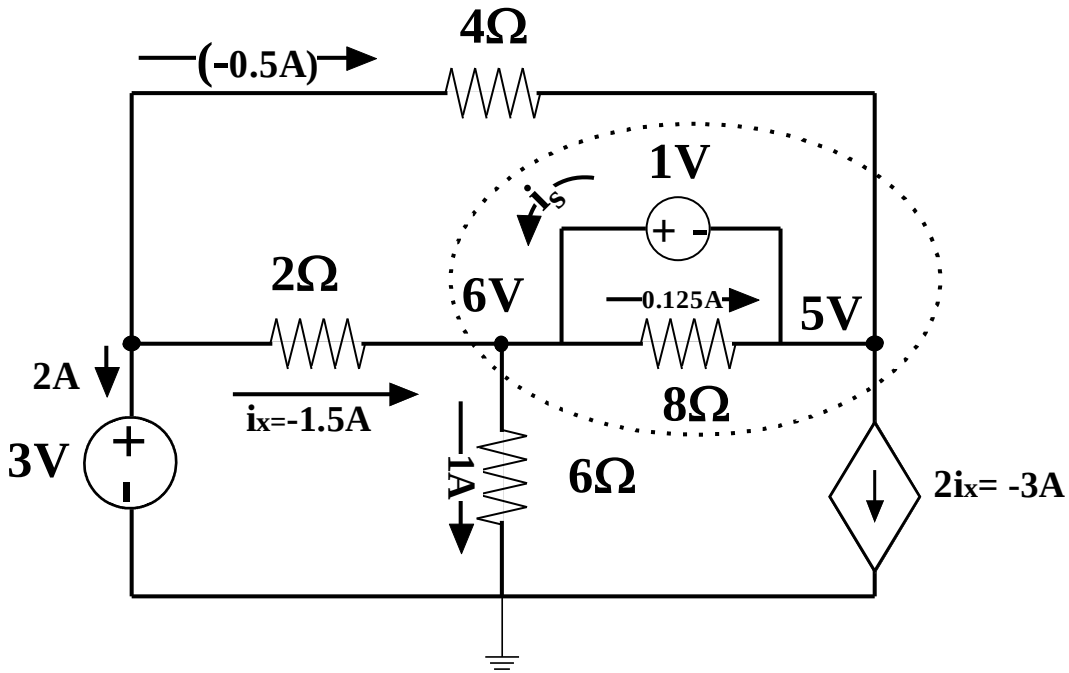

Note that the 3V Source DISSIPATES Power

$$i_s = 2.625A$$

Summary: What is a Super-node?

- **A super-node is formed when an ideal voltage source connected between two non-ground nodes of circuit**
  - Applies for both Independent and Dependent **VOLTAGE** sources
  - Reduces the Number of KCL Equations needed to find the node voltages
    - Reduces the number of mathematically independent node voltages
    - ***Currents internal to the S.N. do not have to be computed to find the node voltages***
  - Not a useful idea for current sources

Multisim Circuit

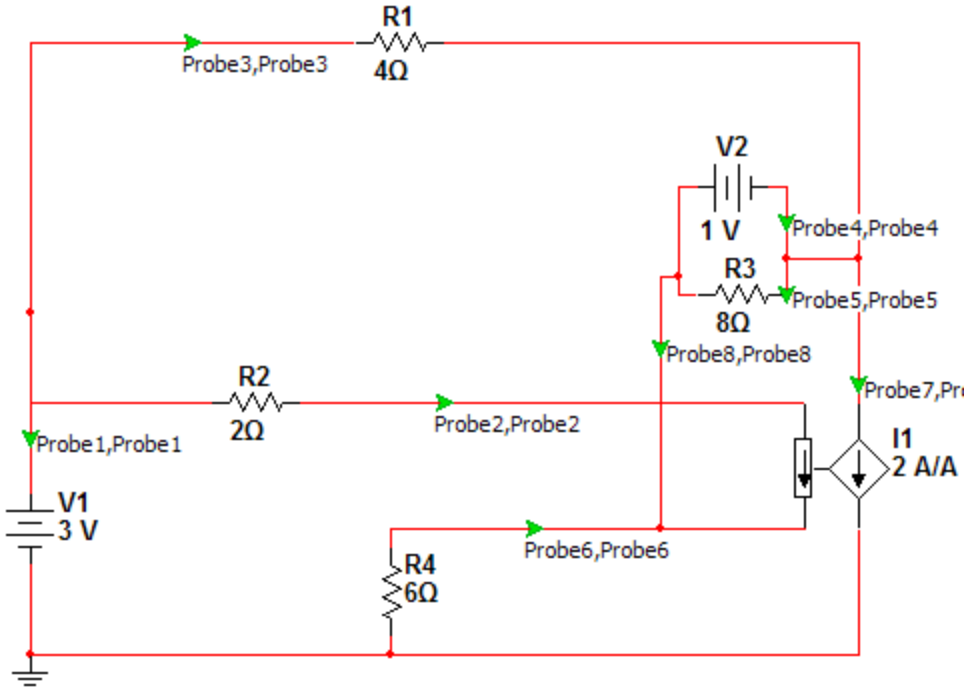

Multisim Circuit and Probe Results

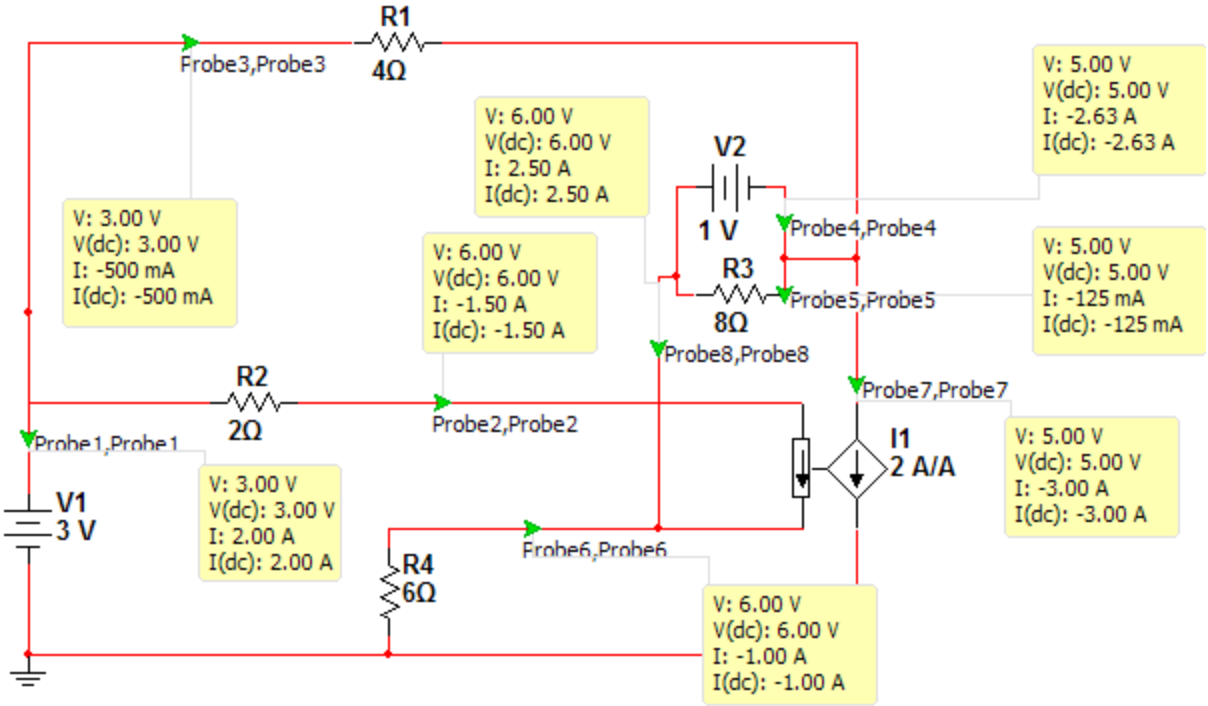

Previous Example

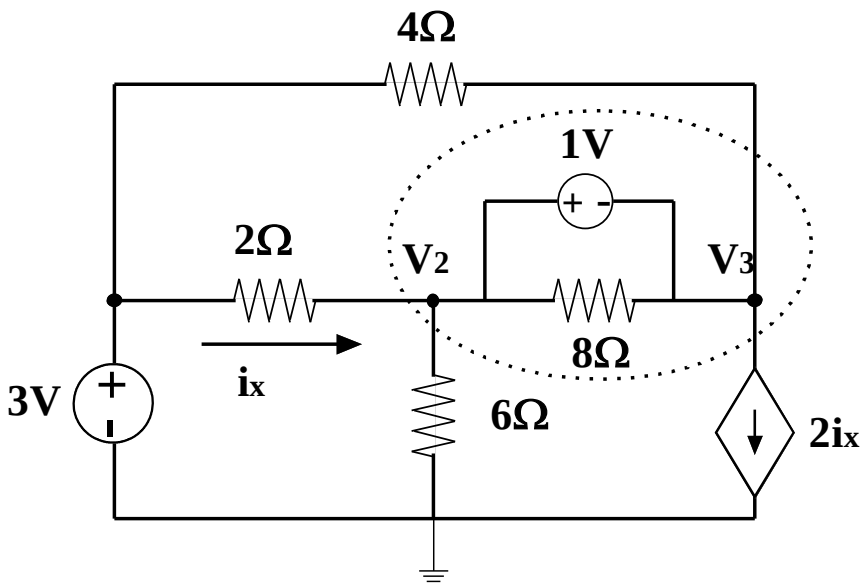

Nodes 2&3 Get treated as one Super-node for KCL since we know that V_2-V_3=1V

Modified Example

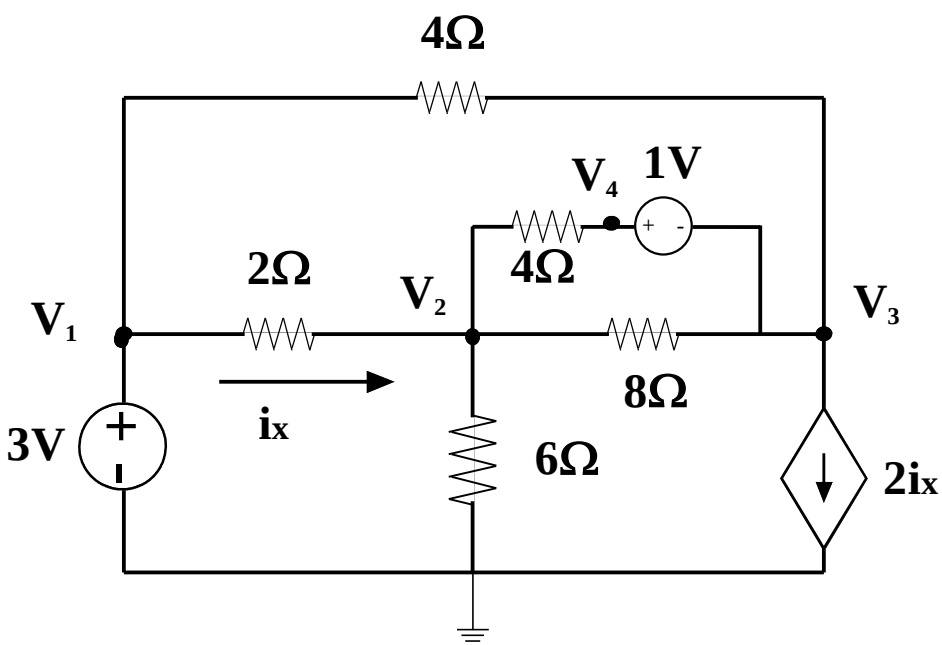

- Now Nodes 2&3 DO NOT FORM a Super-node
  - We do not know V_2 vs. V_3
- <u>Nodes 3&4 Do form a Super-node</u>
  - V_4-V_3=1V

Modified Example

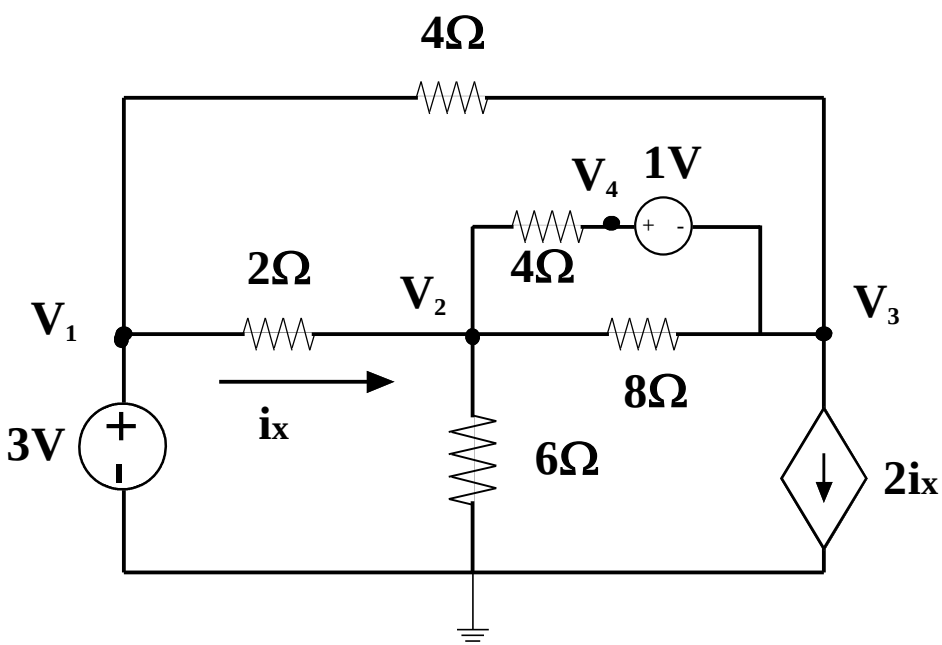

Circuit Redrawn & Supernode Indicated

V_4-V_3=1V

2 KCL equations to write:

Node 2 Normal KCL

3-4 Super-node KCL

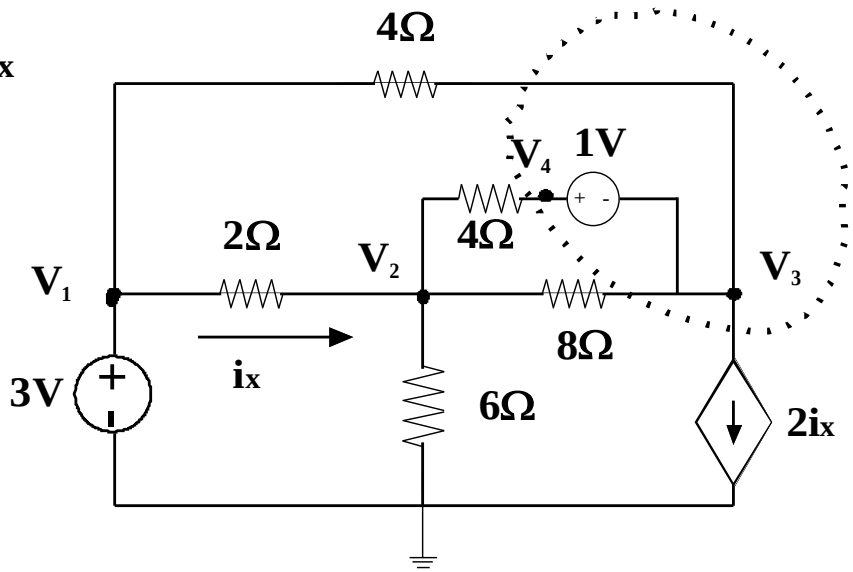

KCL Equations

Element Constraints

$$V_1 = 3V$$

$$i_x = \frac{V_1 - V_2}{2\Omega} = 1.5A - \frac{V_2}{2\Omega}$$

$$V_4 - V_3 = 1V$$

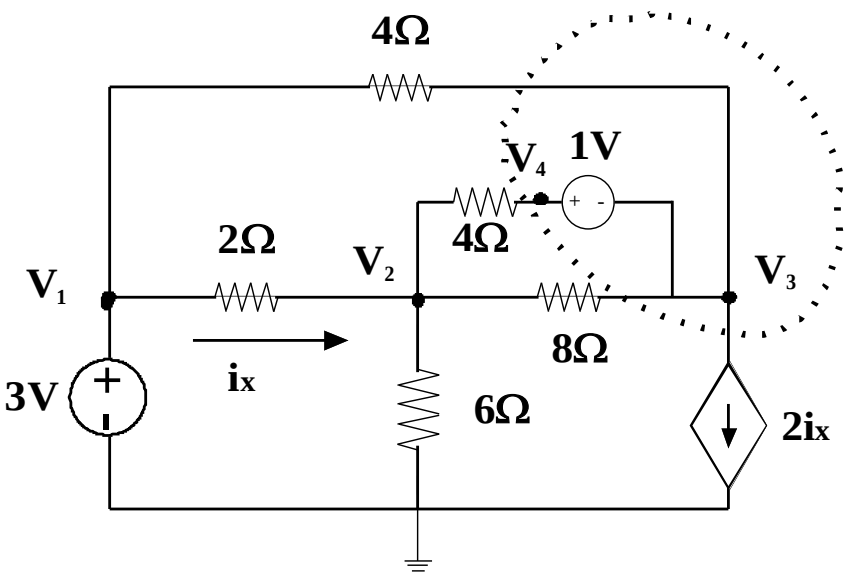

Node 2 KCL (currents out of node):

$$\frac{V_2 - V_1}{2\Omega} + \frac{V_2}{6\Omega} + \frac{V_2 - V_4}{4\Omega} + \frac{V_2 - V_3}{8\Omega} = 0$$

$3-4$ Super-node KCL (currents out of SN):

$$\frac{V_3 - V_1}{4\Omega} + \frac{V_4 - V_2}{4\Omega} + \frac{V_3 - V_2}{8\Omega} + 2i_x = 0$$

Choose either V_3 or V_4 as independent variable and simplify. I will choose V_3.

KCL Equations

Node 2 KCL (incl. element constr.):

$$V_2\left[\frac{25}{24\Omega}\right]+V_3\left[-\frac{3}{8\Omega}\right]=1.75A$$

$3-4$ Super-node KCL (incl. element constr.):

$$V_2\left[-\frac{11}{8\Omega}\right]+V_3\left[\frac{5}{8\Omega}\right]=-2.5A$$

Solving yields:

$$V_2=+\frac{15}{13}V$$

$$V_3=-\frac{19}{13}V\rightarrow V_4=-\frac{6}{13}V$$

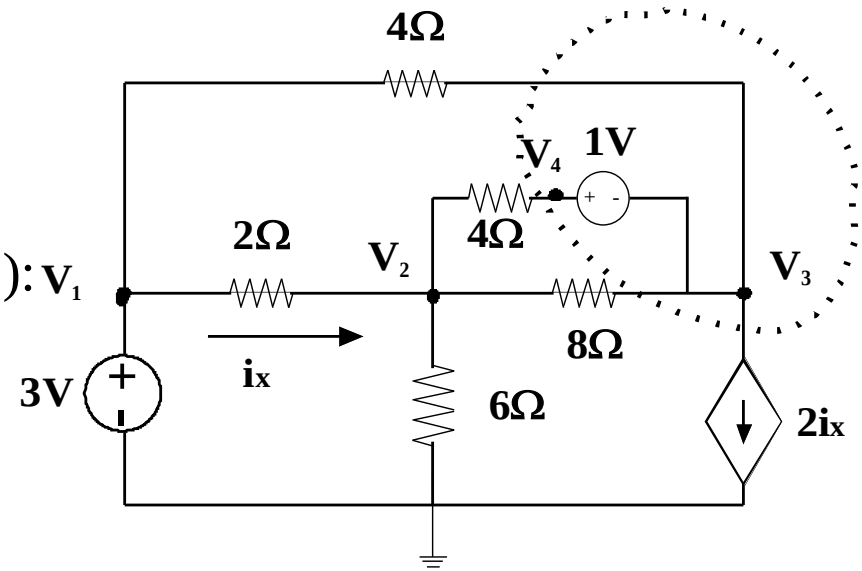

Brute Force Solution Method

- We can take the algebraic equations from the set-up of this problem and use symbolic math solvers to get the whole thing. Matlab does a nice job of this. So do some calculators
- This is legal, but you should still learn the super-node approach
- Brute force algebraic solution still requires you to correctly specify the KCL and element constraint equations.

Matlab Code for Modified Example Problem


```
% Circuit Analysis Example What is a
super-node? Modified Example
% Brute force solution method
clear;
e1='v1=3';
e2='ix=1.5-v2/2';
e3='v4-v3=1';
e4='(v2-v1)/2+v2/6+(v2-v4)/4+(v2-v3)/8=0';
e5='(v3-v1)/4+(v4-v2)/4+(v3-v2)/8+2*ix=0';
vv=solve(e1,e2,e3,e4,e5);
disp('v1=');disp(vv.v1);
disp('v2=');disp(vv.v2);
disp('v3=');disp(vv.v3);
disp('v4=');disp(vv.v4);
disp('ix=');disp(vv.ix);
```

RESULTS:

```
>> v1=
3.

v2=
1.1538461538461538461538461538462

v3=
-1.4615384615384615384615384615385

v4=
-.46153846153846153846153846153846

ix=
.92307692307692307692307692307692
```