OPERATIONAL AMPLIFIERS: OP-AMPS PART 3 MUTIPLE STAGE CIRCUITS SIMPLE GRAPHIC EQUALIZER & OTHER EXAMPLES

© Fred Terry
Winter, 2010

Multi-Stage Opamp Example

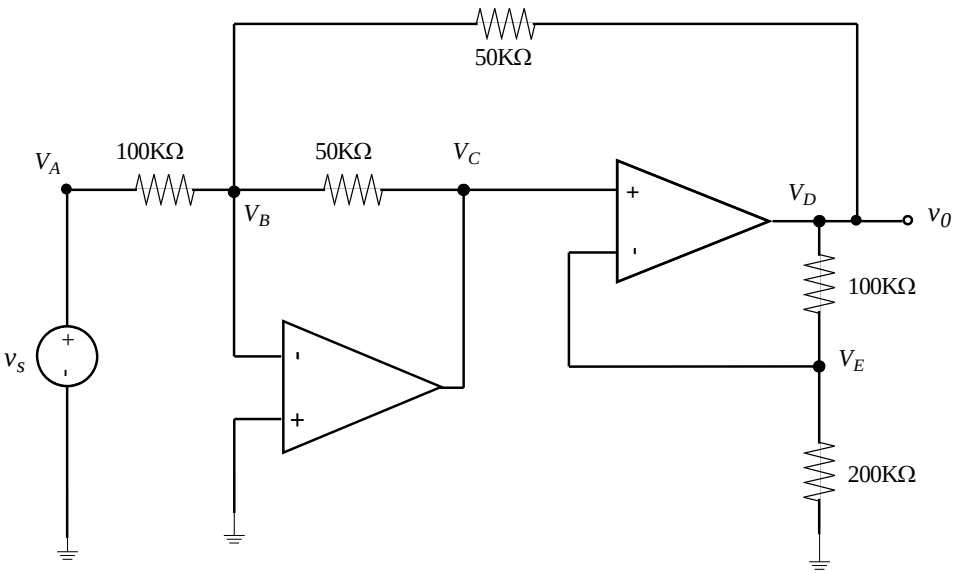

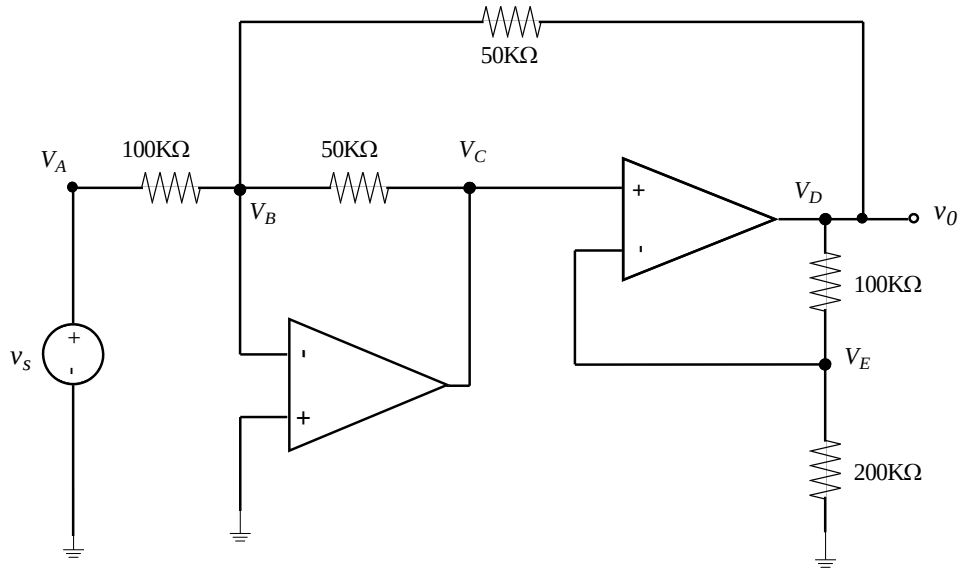
50KΩ
V_A
100KΩ
50KΩ
V_C
V_B
V_D
v_0
100KΩ
v_s
V_E
200KΩ

Extensions: Summing Amp

$$V_- = V_+ = 0$$

$$i_1 = \frac{V_1}{R_1}$$

$$i_2 = \frac{V_2}{R_2}$$

$$i_3 = \frac{V_3}{R_3}$$

$$i_f = i_1 + i_2 + i_3$$

$$V_o = -R_f i_f = -R_f \left[\frac{V_1}{R_1} + \frac{V_2}{R_2} + \frac{V_3}{R_3} \right]$$

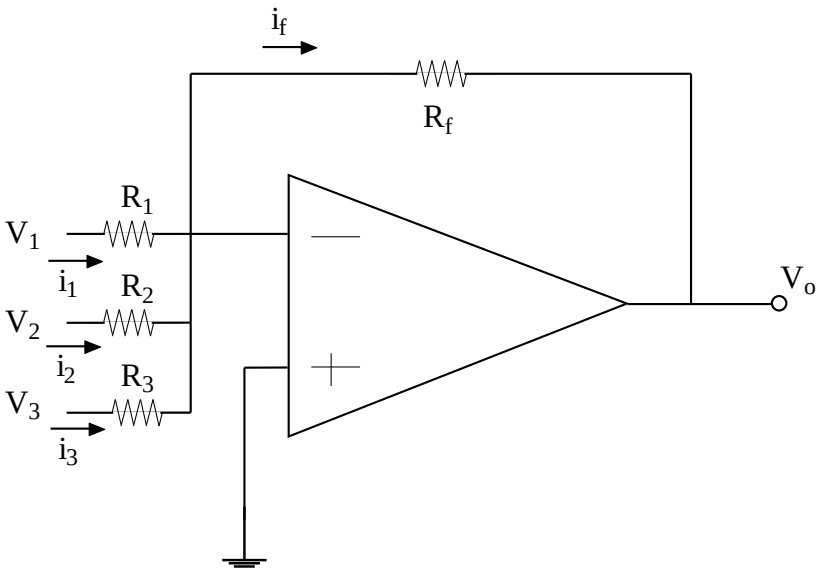

Band-Pass Filter

- Allows a certain range of frequencies to pass and cuts off the rest
  - Bass, Mid-range, Treble, etc.
- Suppose we have several filters (different f_i's) and we want to build a graphic equalizer
- Let's look at a case with 3 filters just to keep it simple

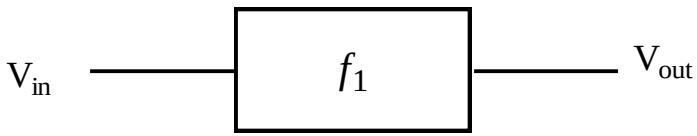

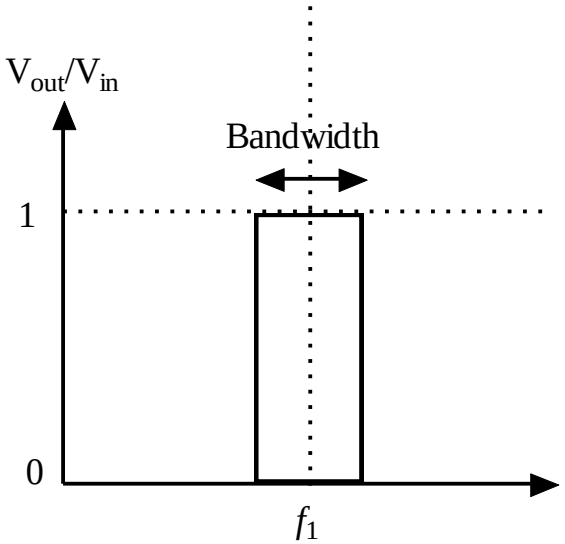

Suggested Layout

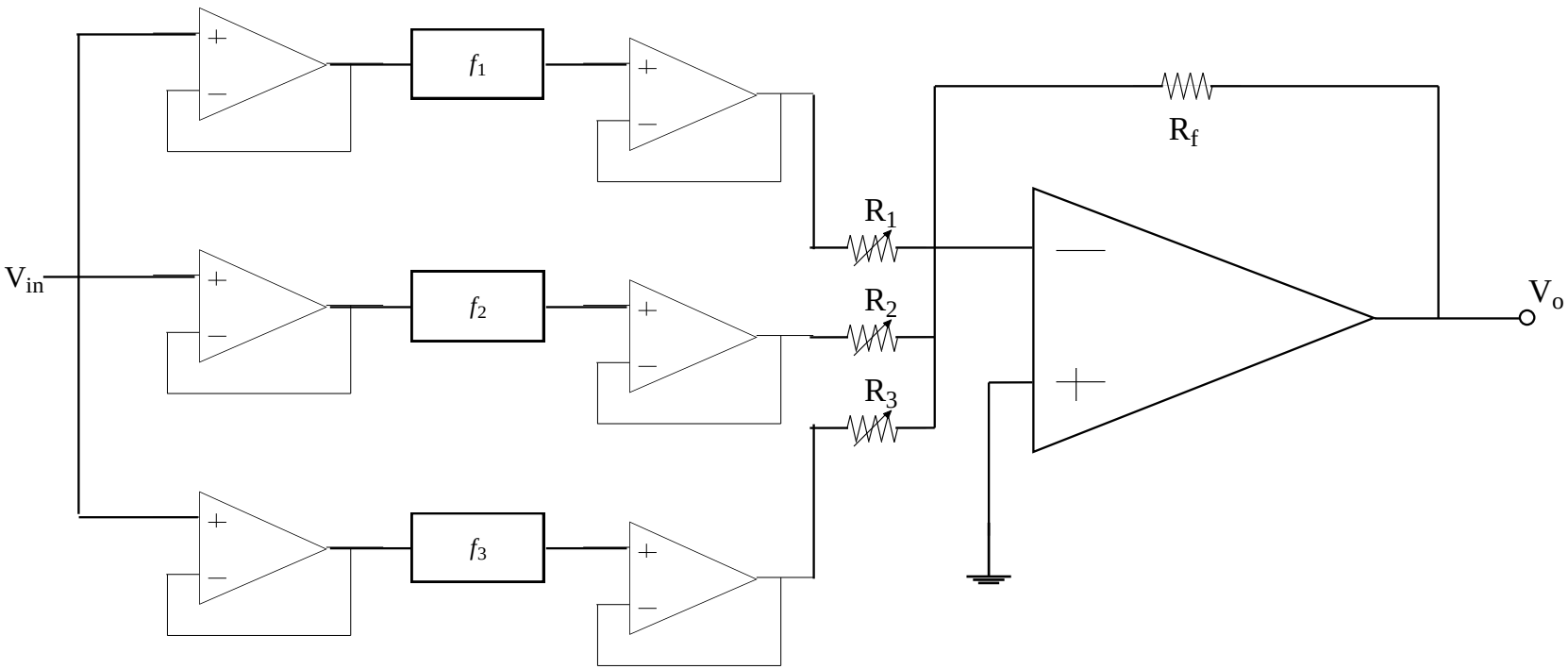

Why do it this way?

Trans-Impedance Amplifier

- Objective: Linearly Convert Current to Voltage
  - Useful for many types of measurement, particularly small currents
  - Photodetectors (Photomultiplier tubes, etc.)
  - MEMS Devices

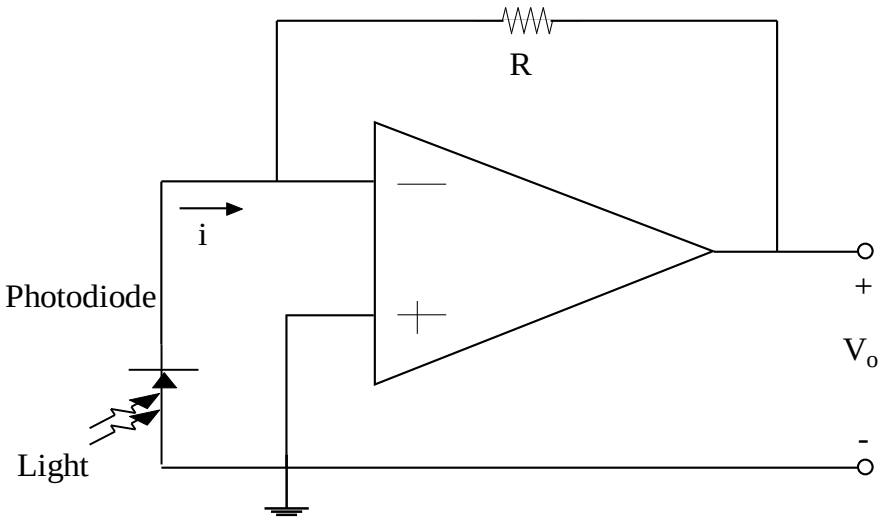

Light Meter I

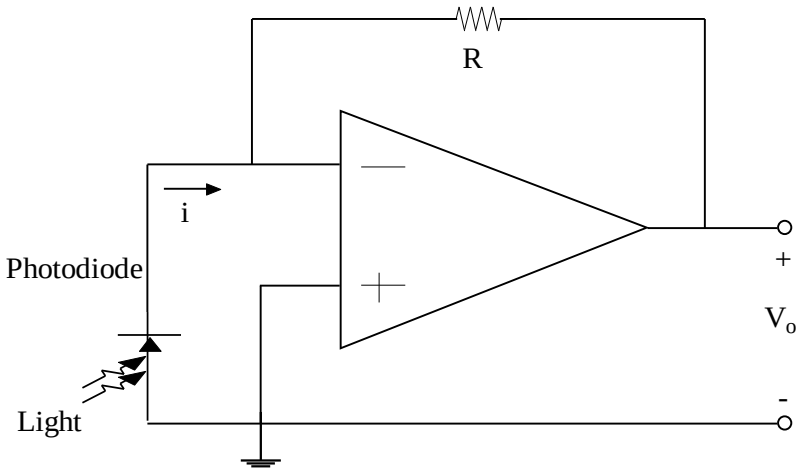

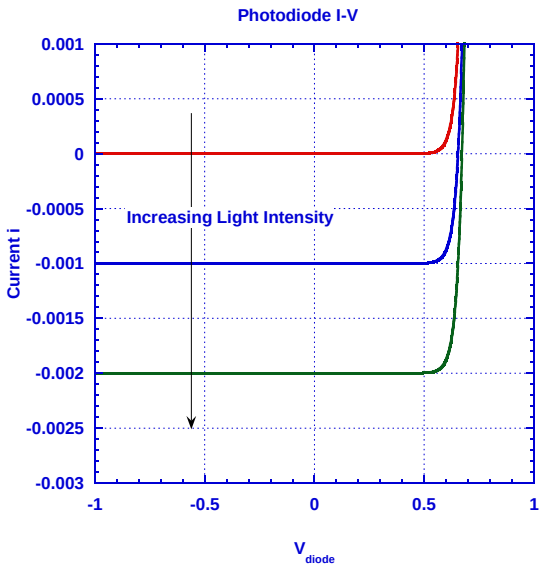

Non-Linear Example

What is V_o vs V_{in}?

How could I use this as an Thermometer?

$$i \approx I_s e^{qV_A/(nk_BT)}$$

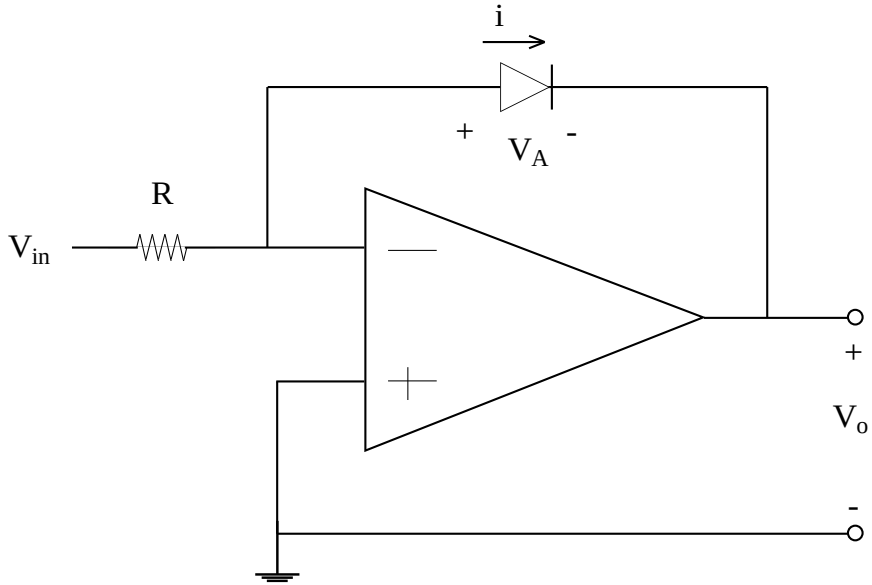

Light Meter II
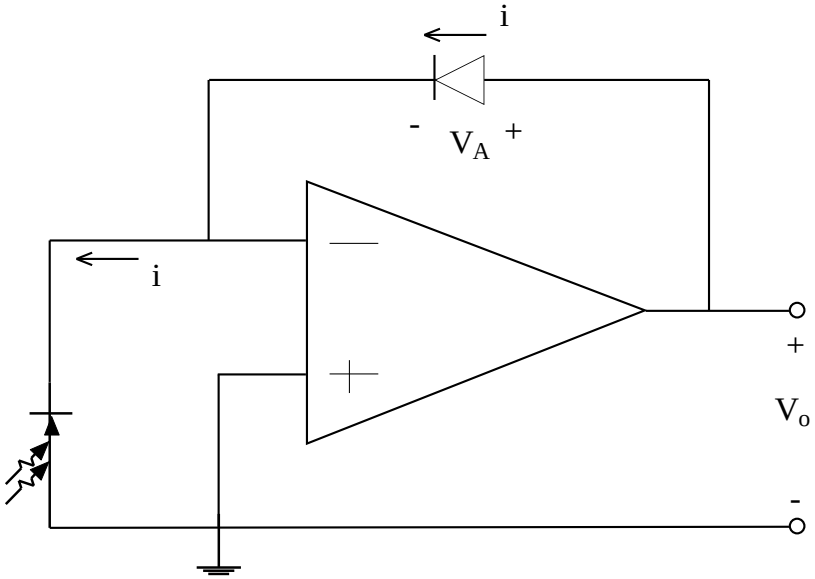
$$i \approx I_s e^{qV_A/(nk_BT)}$$