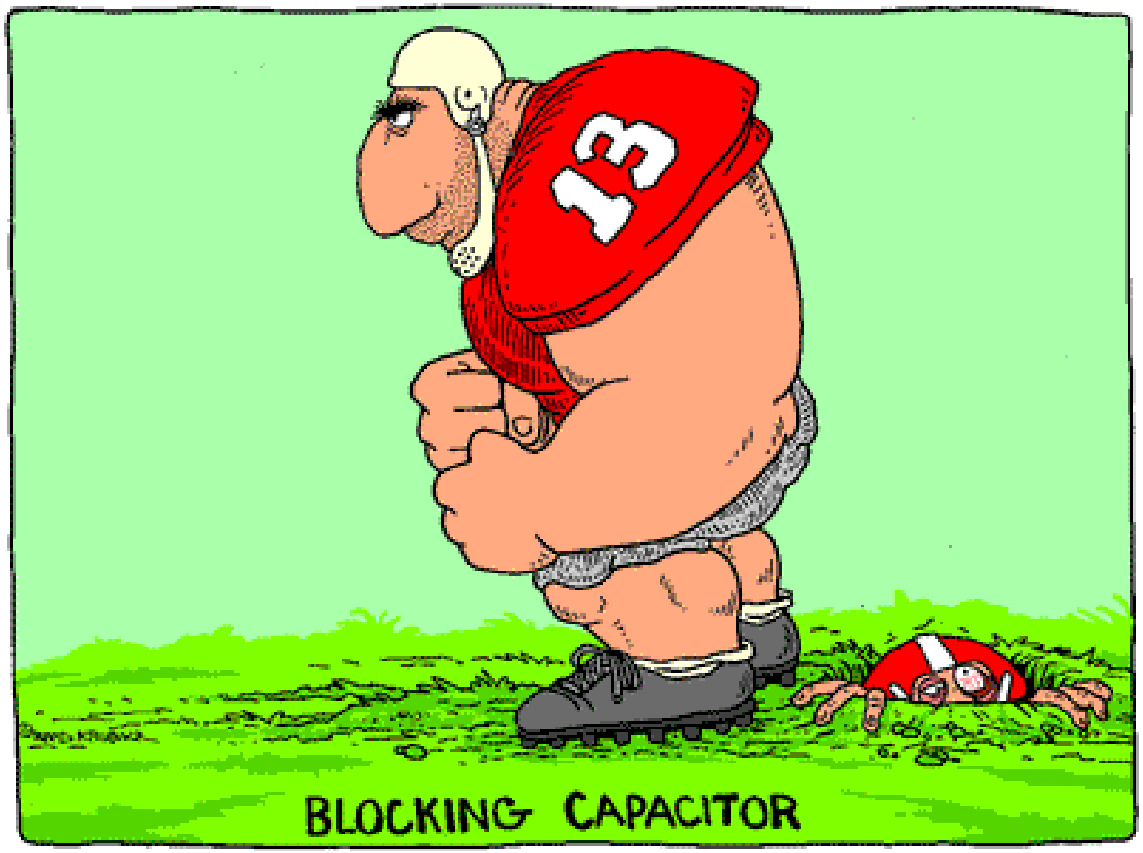

FIRST ORDER CIRCUITS

© Fred Terry
Winter, 2010

First Order Circuits

- Only One Energy Storage Element (one L or one C)
- Resistors, Independent and Dependent Sources
- Result with be a First Order Ordinary, Linear Differential Equation in t
  - First Order since we have one circuit element with with a d/dt element constraint

First Order Ordinary *Linear*, Differential Equations: The Short Story I

$$\frac{dy_p}{dx} + Py_p = Q$$

Differential Equations of the form:

$$\frac{dy}{dx} + P(x)y = Q(x)$$

where $P(x)$, $Q(x)$ are functions of x only (possibly even constants).

The GENERAL solution is made up of a particular solution $y_p(x)$ which solves the total equation and a homogeneous solution $y_h(x)$ which solves the homogeneous equation:

$$\frac{dy_h}{dx} + Py_h = 0$$

$$\frac{dy}{dx} + P(x)y = 0$$

So the full, general solution is:

$$y(x) = y_p(x) + y_h(x)$$

First Order Ordinary *Linear*, Differential Equations: The Short Story II

The homogeneous solution $y_h(x)$ to a 1st order, linear ODE will always have exactly 1 unknown constant, so the general solution:

$$y(x) = y_p(x) + y_h(x)$$

will also always have exactly 1 unknown constant.

We eliminate that constant by matching to the initial condition (also called the boundary condition).

We only match the *full* solution to the initial condition.

We will illustrate all this with circuits examples.

Differential Equations: Simple Example

$t < 0 \quad v = \frac{dx}{dt} = 0, \quad t \geq 0, \frac{dx}{dt} = A$

$t_1 > 0$ where am I? $x(t_1)$?

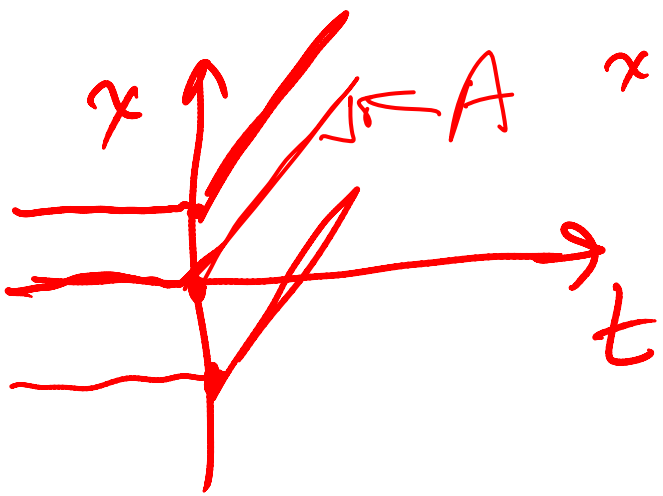

$x = At$

$x(0)$?

Need boundary or initial condition

Differential Equations: Simple Example

$x(0) = x_1$ $\quad \boxed{\frac{dx}{dt} = A}$ $\quad \frac{dx_h}{dt} = 0$

$x_p(t) = At$ $\quad x_h = C$

$\boxed{x(t) = At + C}$ General Complete } Solution

$x(0) = A \cdot 0 + C = x_1 \Rightarrow \boxed{C = x_1}$

~~Math~~ Electrical Example

$\boxed{\tau = RC}$

$V(0) = V_0$

$t=0$

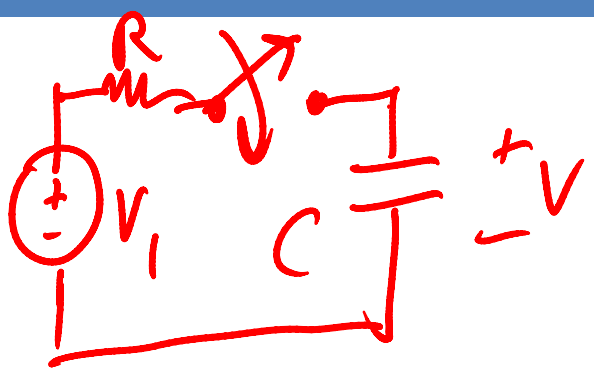

$$\frac{dV}{dt} + \frac{1}{\tau}V = \frac{1}{\tau}V_1 \quad \textit{where } V_1, \tau \textit{ are constants}$$

What is V(t)?

Boundary Condition/Initial Condition $V(0)=V_0$

$V_f = V_1$ *particular / forced solution*

Note that this solves the complete differential equation

Note that

$V_n = Ae^{-t/\tau}$ *A any constant, solves the natural/homegeonous equation*

$$\frac{dV}{dt} + \frac{1}{\tau}V = 0 \quad so$$

$$V(t) = \underbrace{\underbrace{V_1}_{forced} + \underbrace{Ae^{-t/\tau}}_{natural}}_{complete} \textit{ solves the complete differential equation}$$

Match Initial Condition to complete solution:

$$V(0) = V_1 + Ae^{-0/\tau} = V_1 + A = V_0 \rightarrow A = V_0 - V_1$$

$$V(t) = V_1 + (V_0 - V_1)e^{-t/\tau}$$

$$\frac{dV}{dt} + \frac{1}{\tau}V = 0$$

$$\frac{dV}{dt} = -\frac{1}{\tau}V$$

$$\frac{1}{V}dV = -\frac{1}{\tau}dt$$

Example

Suppose I_0 is constant and non-zero.

What is $I_1(t)$ for t>0?

$I_L(t)=I_o \leq t$

$I_1(t)=0 \leq t$

Since this problem fixes conditions under which $V_L(t)=0 \leq t$

And $V_L(t)=0 \geq t$

thus

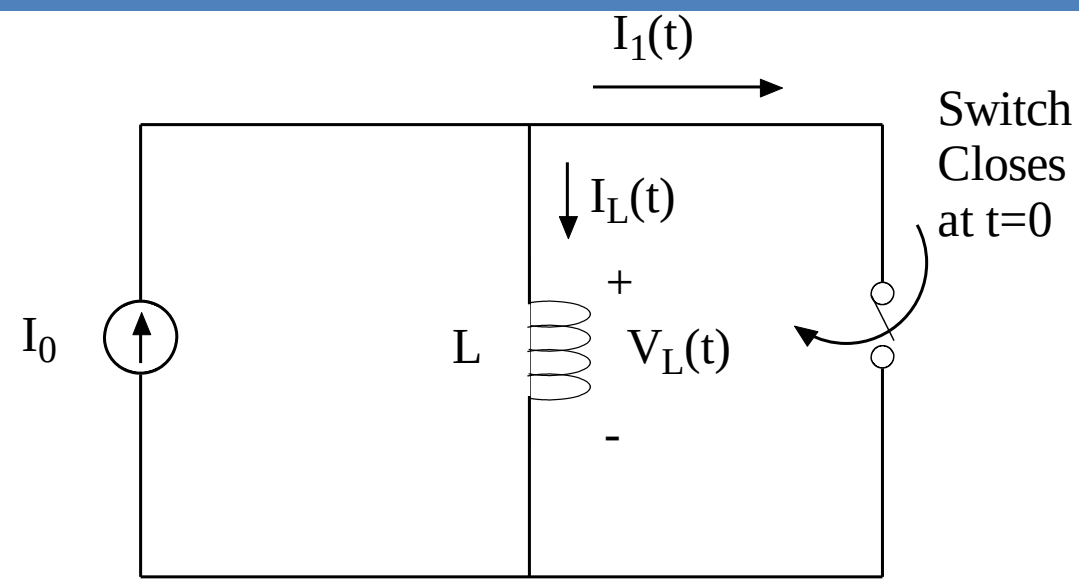

$$\frac{\partial I_L}{\partial t} = \frac{V_L}{L} = 0 \quad \forall t$$

$$\rightarrow I_L(t>0) = I_L(t<0) = I_0$$

Modified Example

$\boxed{B.C.\ I_L(0) = I_0}$

$V_L = L\frac{dI_L}{dt}$ $\quad V = H\,A/s$

$H = V\cdot s/A = \Omega\cdot s$

Suppose I_0 is constant and non-zero.

What is $I_1(t)$ for t>0?

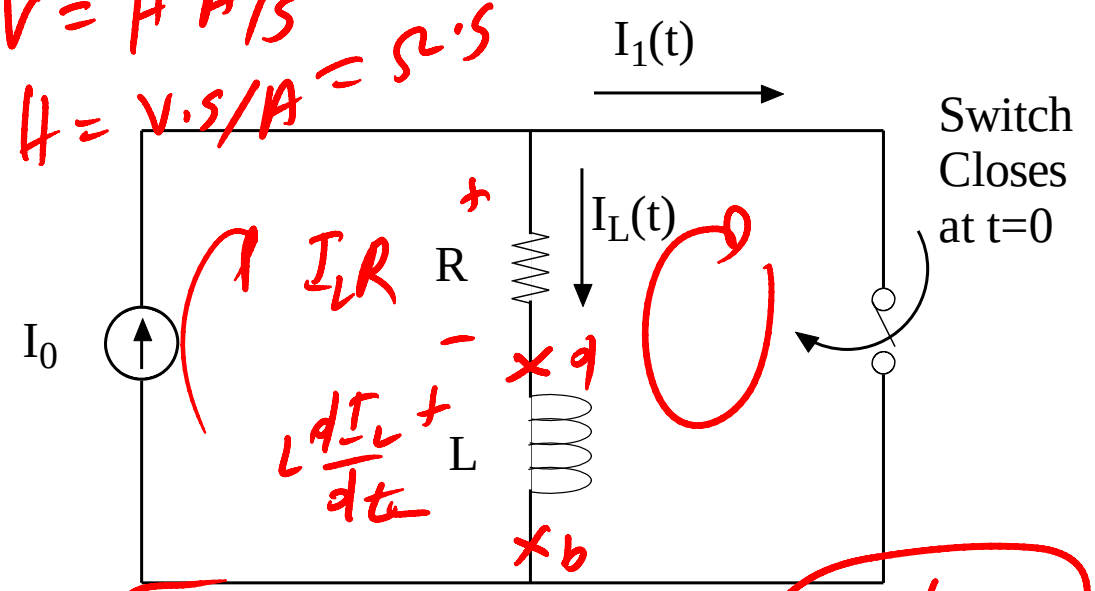

$+V_L + I_L R = 0$

$L\frac{dI_L}{dt} + I_L R = 0$

$\frac{dI_L}{dt} + \frac{R}{L} I_L = 0$

$\boxed{\tau = \frac{L}{R}\ (s)}$

$\frac{dI_L}{dt} + \frac{1}{\tau} I_L = 0$

$\boxed{I_L = A e^{-t/\tau}}$

General Approach

- Use KVL, KCL, Circuit Element Laws to find differential equation for circuit problem
- Find the *Initial Conditions* (same as boundary conditions)
- Find the *Natural Solution* (homogenous solution)
  - This is the same as the unforced circuit reponse
- Find the *Forced Solution* (particular solution)
- Add the Forced+Natural Solutions to get the *Complete Solution*
- Eliminate the Unknowns (1 unknown in a FOC) using the Initial Conditions

Modified Example

$I_1(t) = I_0 - I_L(t)$

KCL

$I_L(t) = Ae^{-t/\tau}$ $\tau \equiv L/R$

$I_L(0) = I_0 = A$

$I_L(t) = I_0 e^{-t/\tau}$

$= I_0 e^{-Rt/L}$

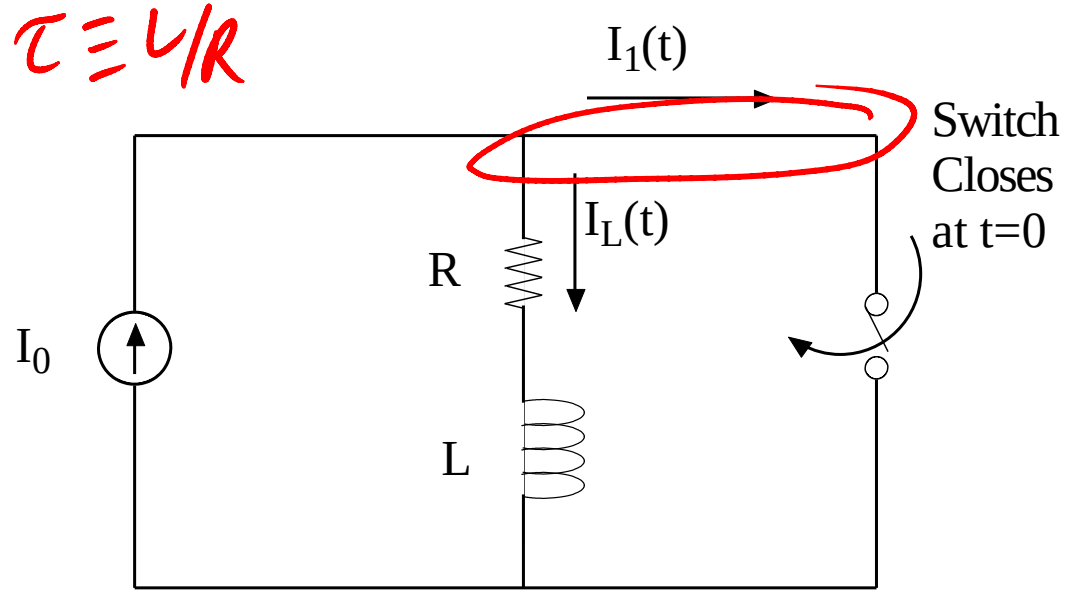

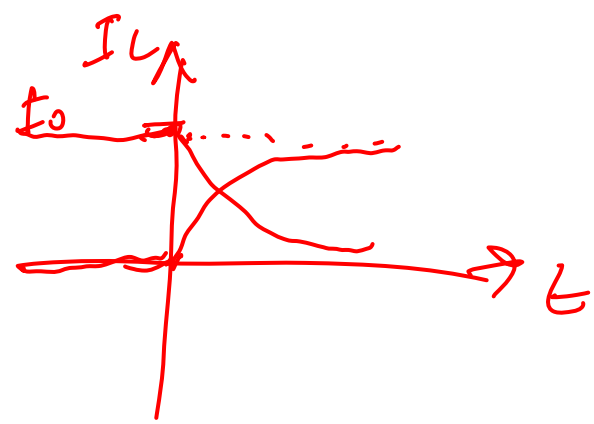

$R = 0$ matches

Modified Example

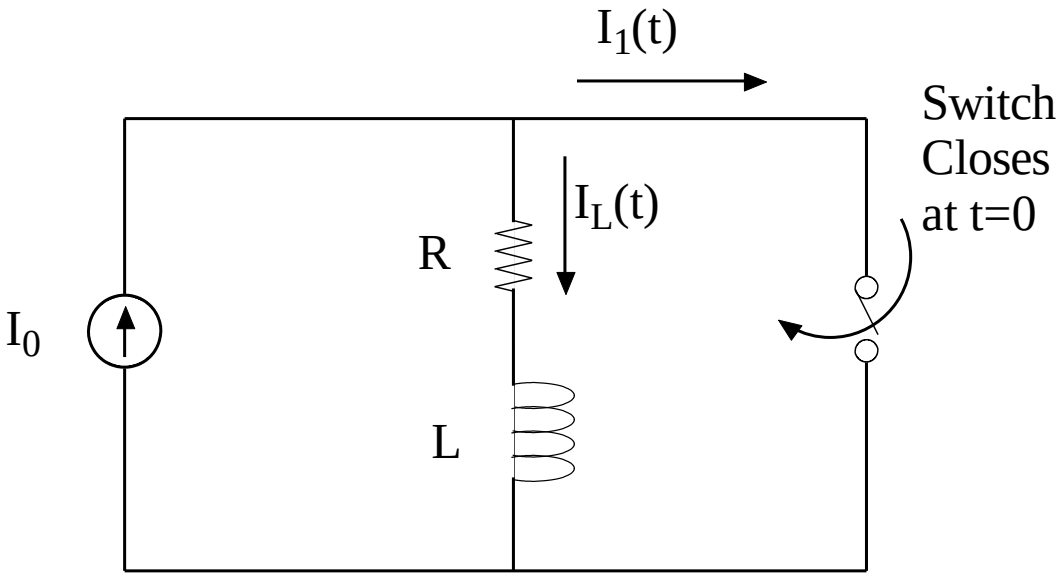

Modified Example

$$I_0 = I_L + I_1$$ KCL

$$V_L + I_L R = 0$$ KVL

$$L\frac{\partial I_L}{\partial t} + I_L R = 0$$ Diff. Eqn.

$$\frac{\partial I_L}{\partial t} + \frac{R}{L} I_L = 0$$ Standard Form

$$\frac{\partial I_L}{\partial t} + \frac{1}{\tau} I_L = 0$$

$$\tau = \frac{L}{R}$$

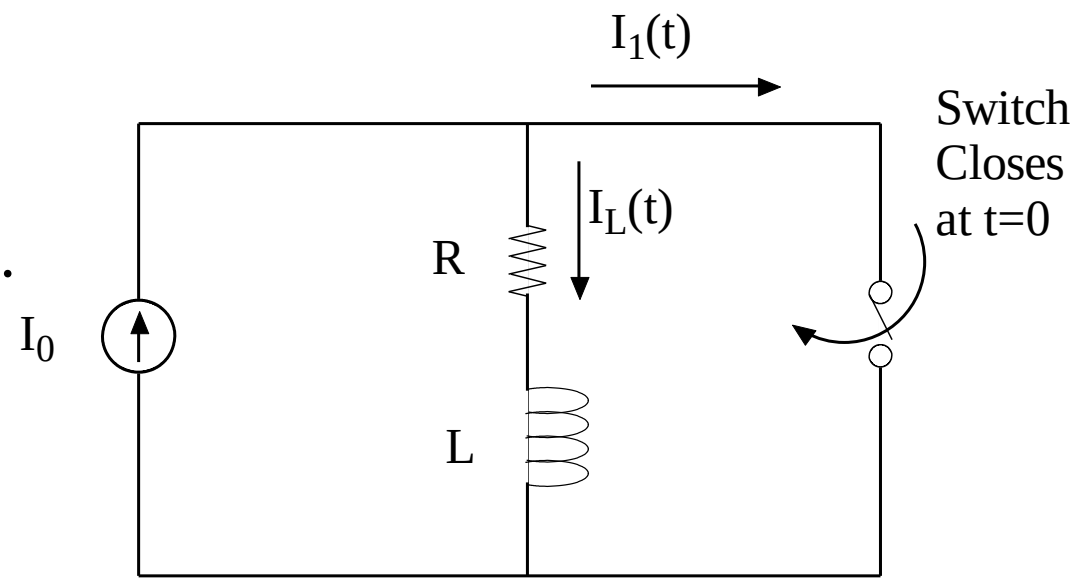

Modified Example

$$\frac{\partial I_L}{\partial t} + \frac{R}{L} I_L = 0 = \frac{\partial I_L}{\partial t} + \frac{I_L}{\tau}$$

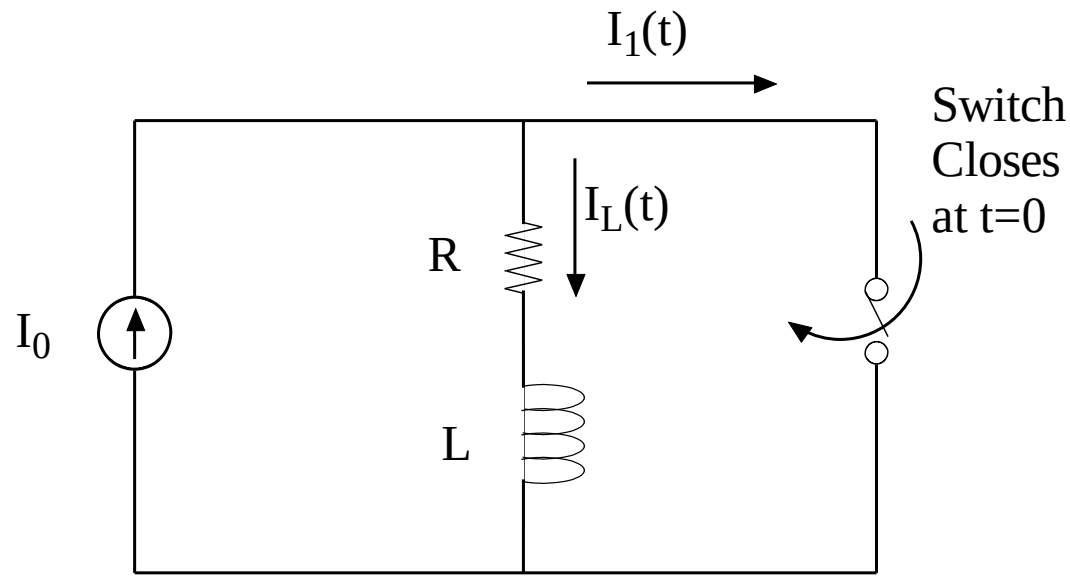

Natural Solution:

$$I_L = Ae^{-t/\tau} = Ae^{-tR/L}$$

Forced Solution=0

Initial Condition:

$$I_L(t=0) = I_0$$

Why is this my initial condition?

$$I_L(0) = Ae^{-0/\tau} = I_0$$

$$\rightarrow I_L(t) = I_0 e^{-tR/L}$$

$$\rightarrow I_1(t) = I_0 - I_0 e^{-tR/L} = I_0\left(1 - e^{-tR/L}\right)$$

Modified Example

$$I_L(t) = I_0 e^{-tR/L}$$

$$I_1(t) = I_0\left(1 - e^{-tR/L}\right)$$

Note the limit as R→0

The problem reduces to our previous ideal case!

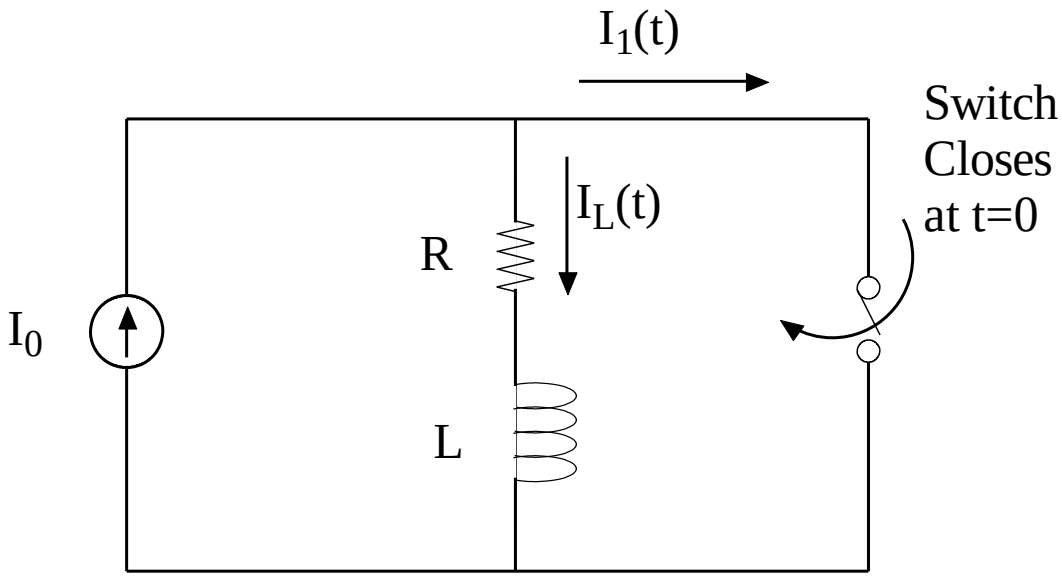

Modified Example

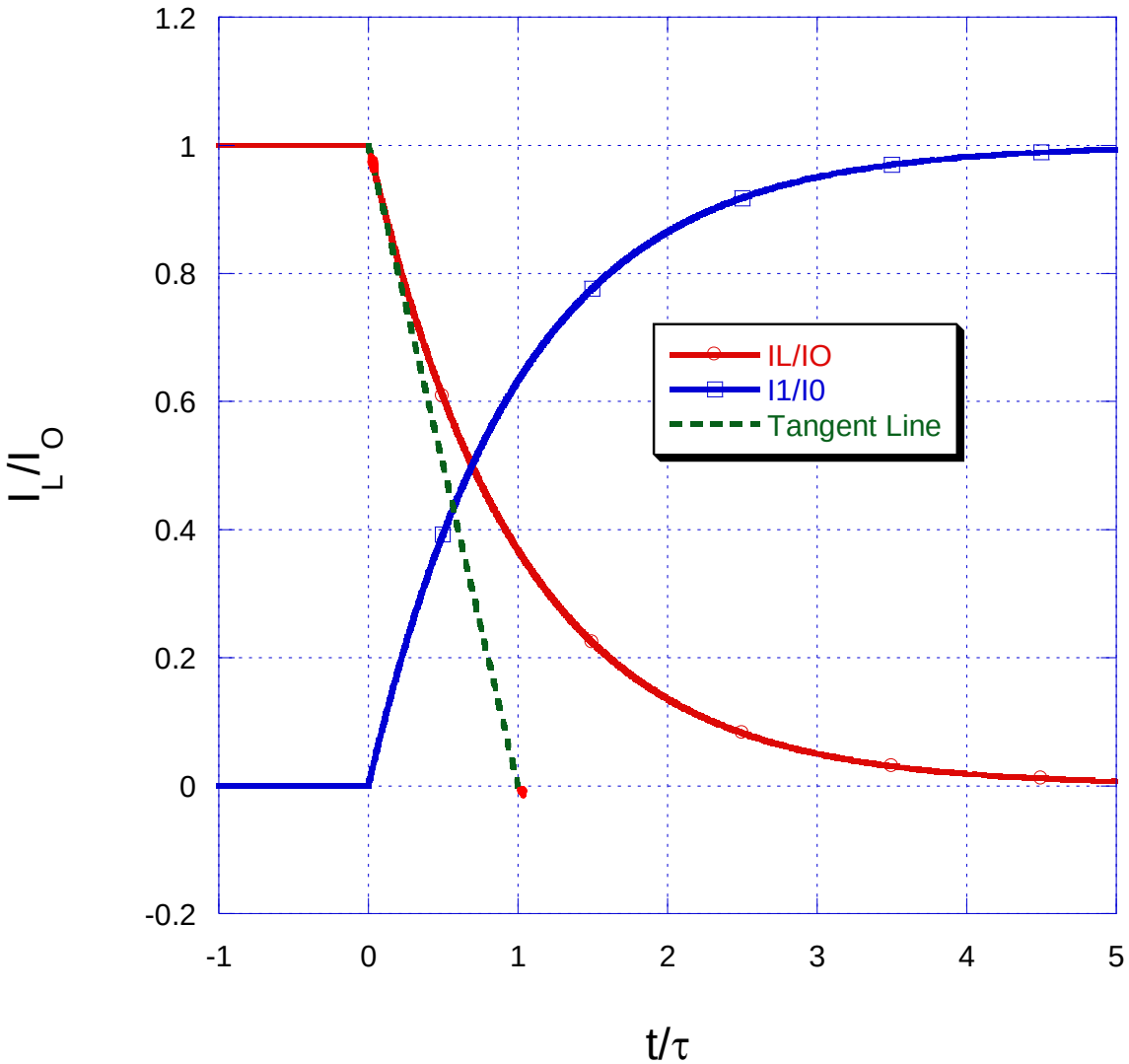

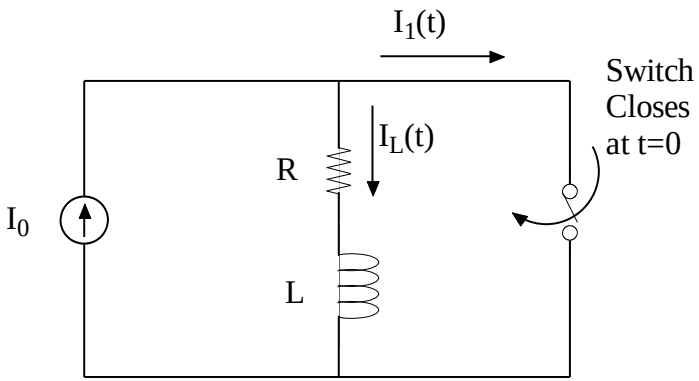

Note:

Tangent line shows intersection with t-axis at one time constant

Modified Example

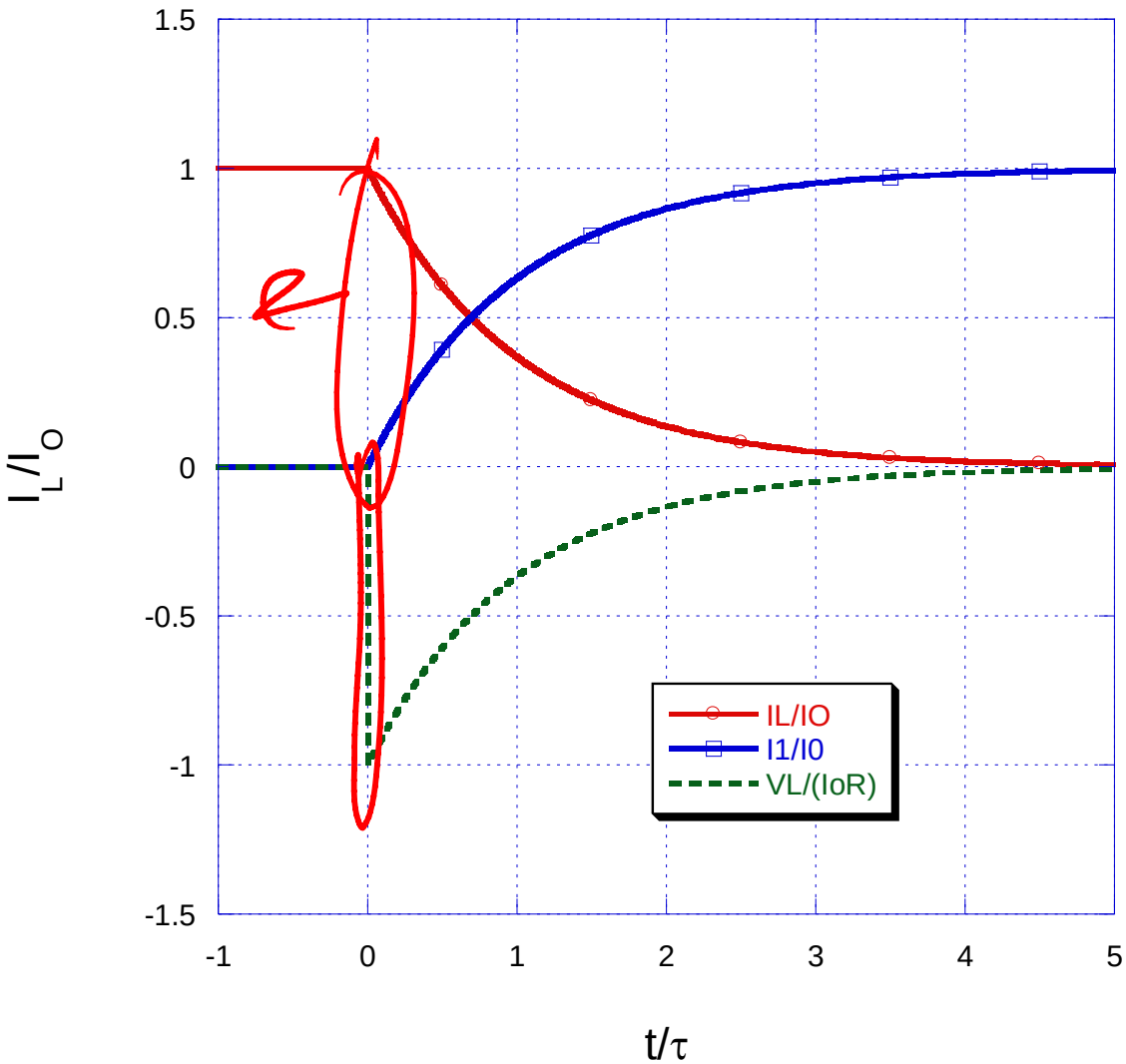

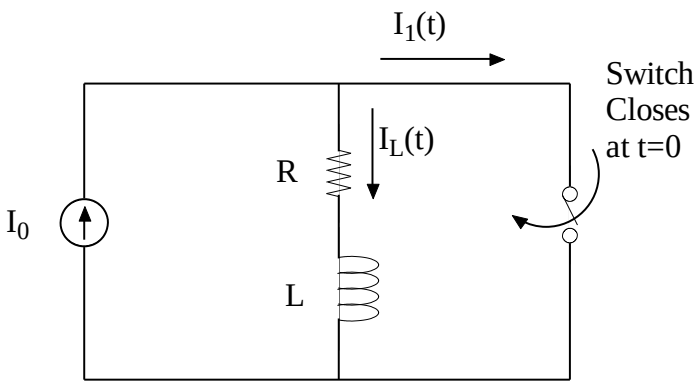

Note:

I_L is continuous at t=0

V_L is not

Natural Solutions: RL Circuits

- Really, We Just Did This but Let's Be Formal and Do It Right

$V_L + I_L R = 0$

$L\frac{dI_L}{dt} + I_L R = 0$

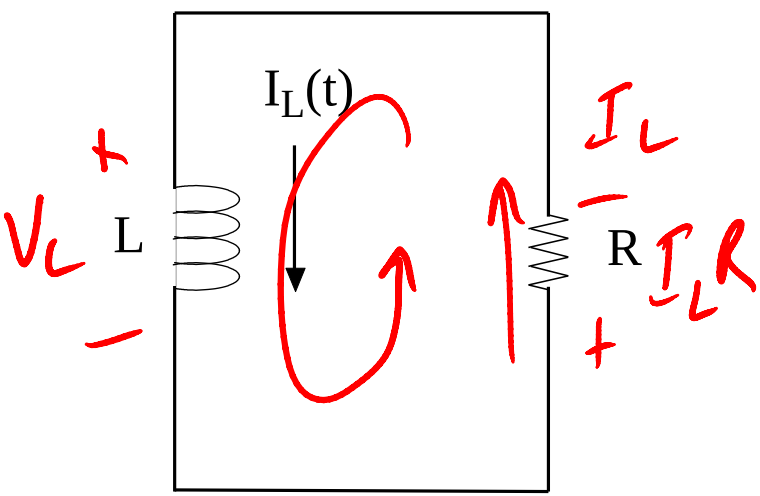

Assume

$$I_L(t) = I_o \quad \forall (t < 0)$$

$$find\ I_L\ for\ t > 0$$

$I_{L,n}(t) = Ae^{-t/\tau}$

$\tau = L/R$

Natural Solutions: RL Circuits

$$Assume\ I_L(t) = I_o \quad \forall(t<0), \quad find\ I_L\ for\ t>0$$

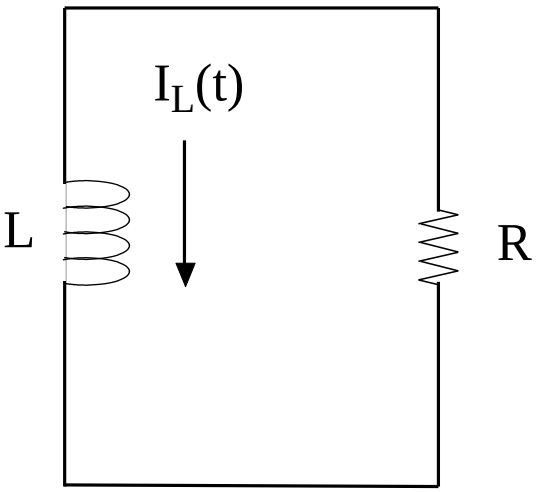

$$V_L + I_L R = 0 \quad KVL$$

$$L\frac{\partial I_L}{\partial t} + I_L R = 0$$

$$\frac{\partial I_L}{\partial t} + \frac{R}{L} I_L = 0$$

$$\frac{1}{I_L}\frac{\partial I_L}{\partial t} = -\frac{R}{L}$$

$$\int \frac{1}{I_L}\frac{\partial I_L}{\partial t}\partial t = \int \frac{1}{I_L}\partial I_L = -\int \frac{R}{L}\partial t$$

$$\ln\left(I_L\right) + B = -\frac{R}{L}t$$

$$I_L(t) = Ae^{-\frac{R}{L}t}$$

$I_C = C\, dV_C/dt \qquad A = F \cdot V/s$

Natural Solutions: RC Circuits

$F = \frac{A}{V} \cdot s$

$= \Omega^{-1} \cdot s$

$\tau = \Omega \cdot (\Omega^{-1} \cdot s) = s$

Assume $V_C(t) = V_o \quad \forall (t < 0), \quad$ *find* V_c *for* $t > 0$

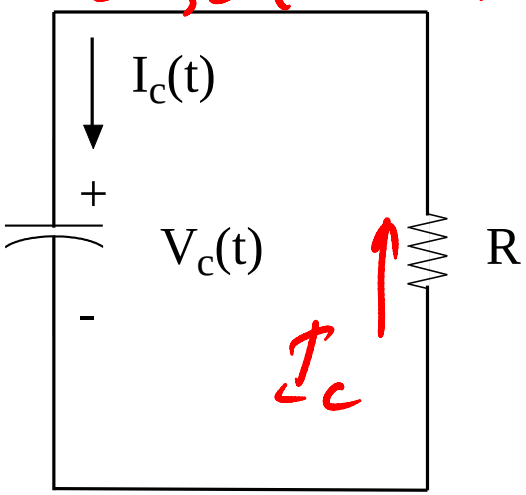

KVL:

$V_c + I_c R = 0$

$V_c + \left(C \frac{dV_c}{dt}\right) R = 0$

$$\boxed{\begin{aligned} V_{c,n}(t) &= A e^{-t/\tau} \\ \tau &= RC \end{aligned}}$$

$\frac{dV_c}{dt} + \left(\frac{1}{RC}\right) V_c = 0$

$\alpha \; 1/\tau$

$\frac{dI_L}{dt} + \left(\frac{R}{L}\right) I_L = 0$

$\alpha \; 1/\tau$

Natural Solutions: RC Circuits

$$Assume\ V_C(t) = V_o \quad \forall (t<0), \quad find\ V_c\ for\ t>0$$

$$V_c + I_c R = 0 \quad KVL$$

$$RC\frac{\partial V_C}{\partial t} + V_c = 0$$

$$\frac{\partial V_C}{\partial t} + \frac{1}{RC}V_c = 0$$

$$General\ Solution:$$

$$V_c(t) = Ae^{-t/(RC)} = Ae^{-t/\tau}$$

$$\tau = RC$$

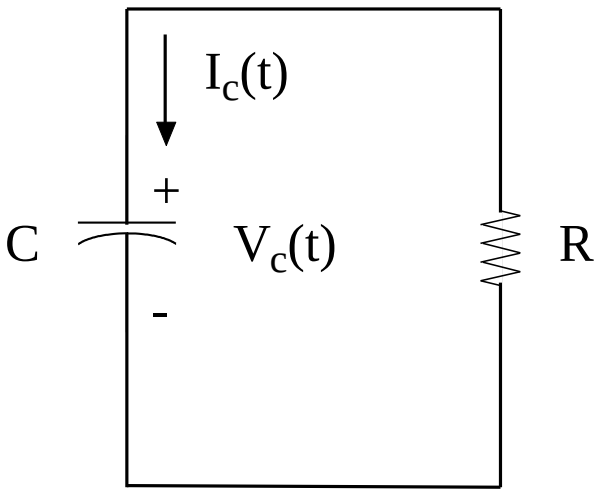

Numerical Example

$$V_c(t) = 10V \quad \forall (t < 0)$$

$$C = 1\mu F \quad R = 10K\Omega$$

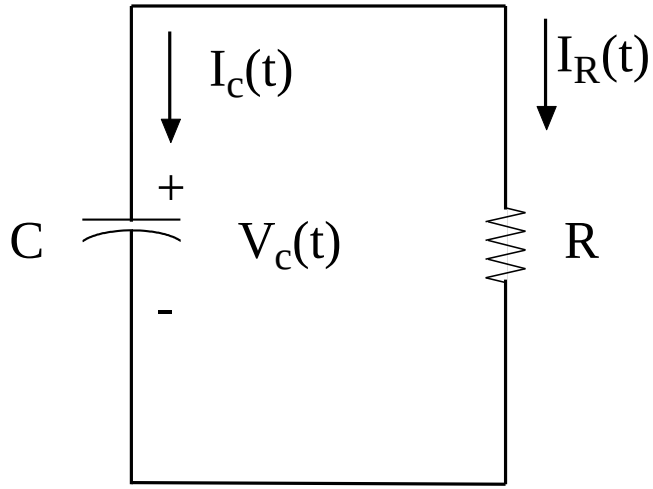

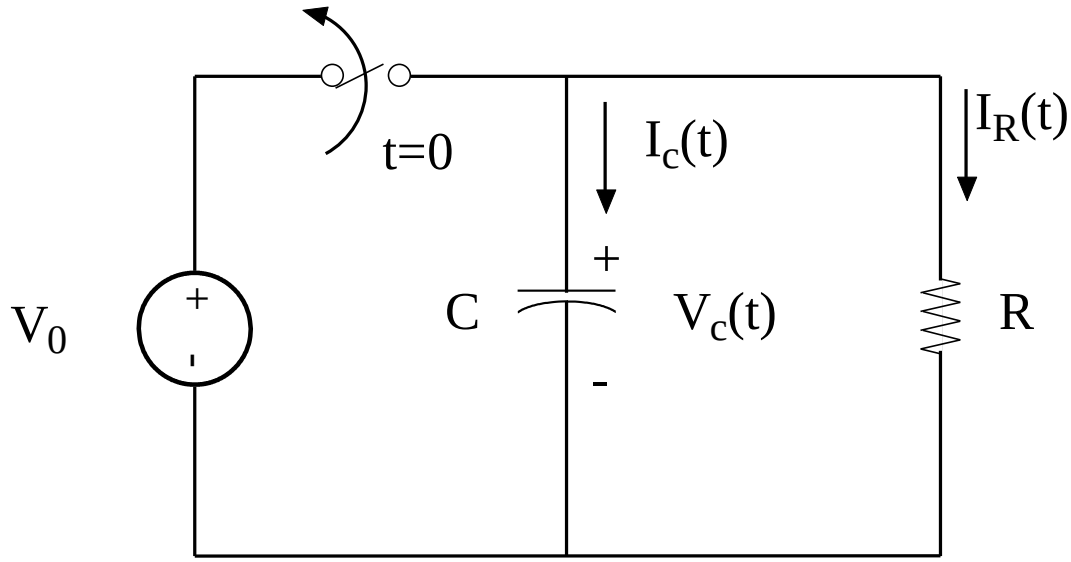

Numerical Example

$$V_c(t) = 10V \quad \forall (t < 0)$$

$$C = 1\mu F \quad R = 10K\Omega$$

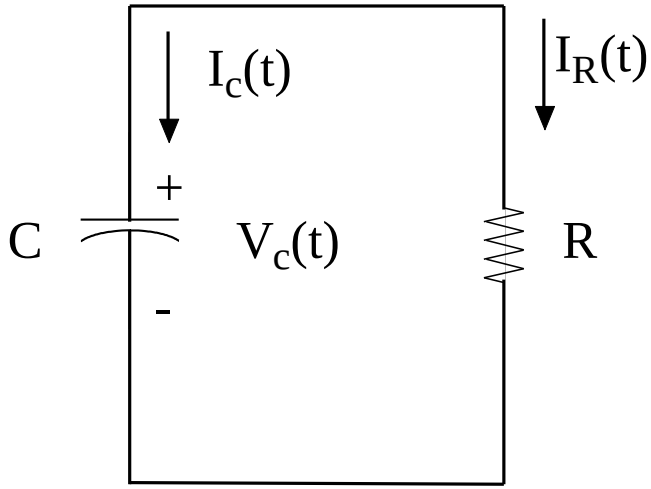

Numerical Example

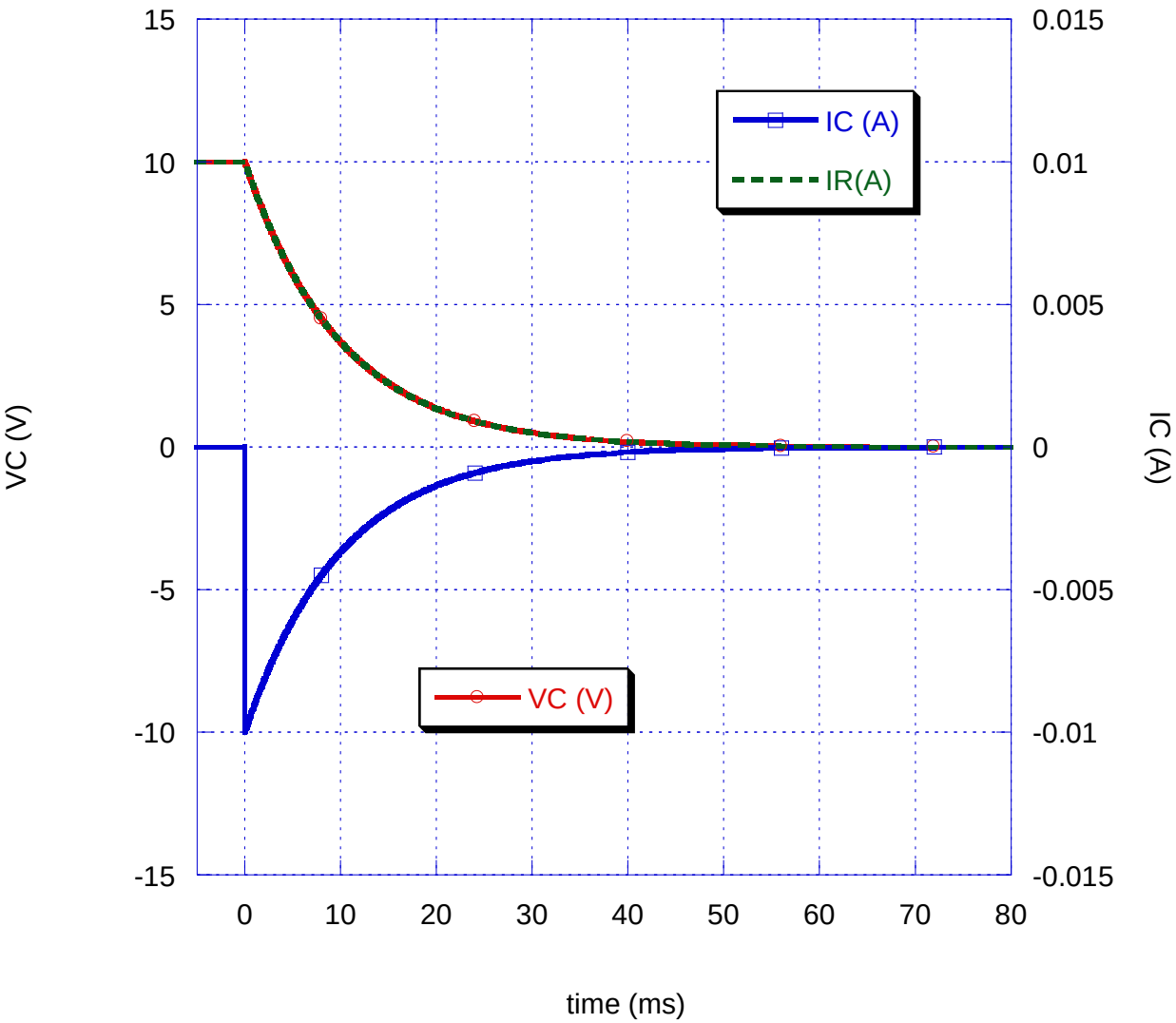

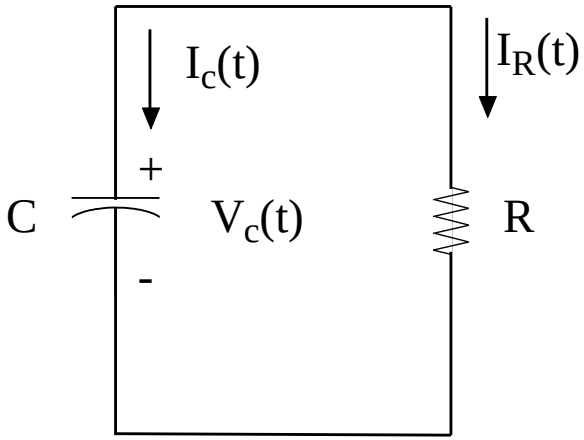

$$V_c(t) = 10V \;\; \forall (t < 0)$$

$$C = 1\mu F \quad R = 10K\Omega$$

Numerical Example

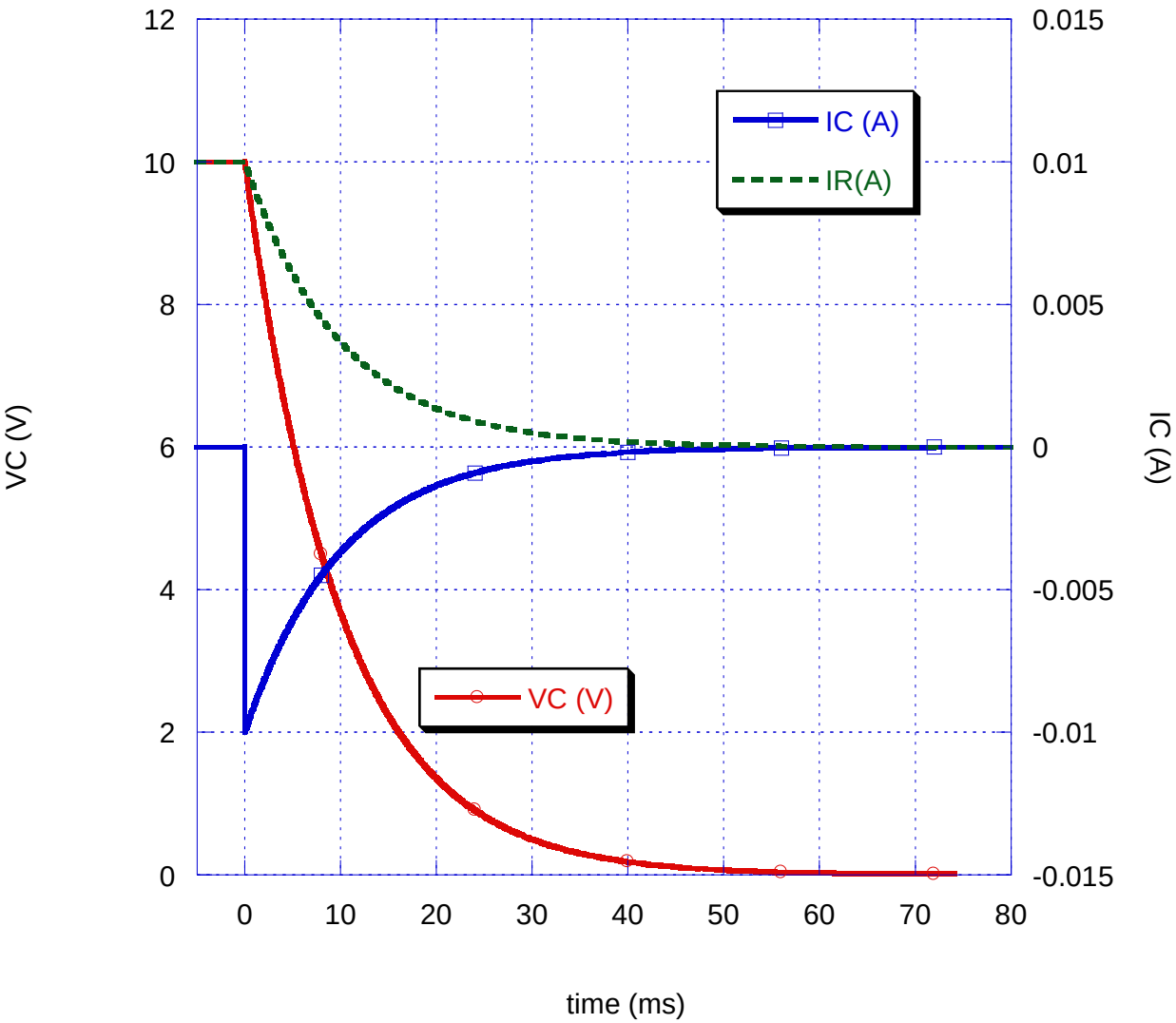

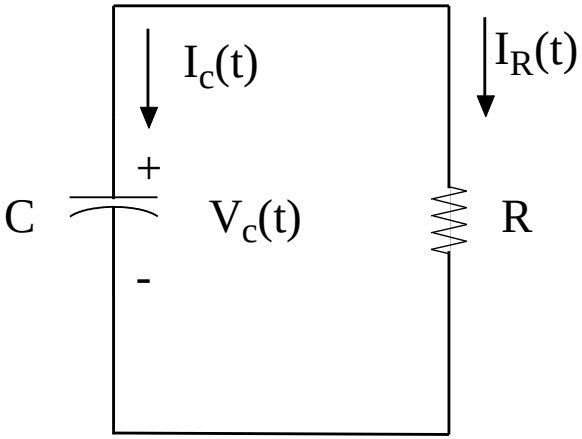

$$V_c(t) = 10V \;\; \forall (t < 0)$$

$$C = 1\mu F \quad R = 10K\Omega$$

Same data, only V-scale is changed

Procedure for Solving Complete (Forced) FOC Problems

1) Find Initial/Boundary Conditions
2) Find Natural (homogeneous) Solution
3) Find Forced (particular) Solution

   For step response problems this is the solution when $t \rightarrow \infty$

4) Add Forced & Natural to get Complete Solution
5) Match Unknown in Complete Solution to Initial Conditions

<u>(1)-(3) can be done in any order, but (4)&(5) must come at the end!!</u>

Integral Math for the First-Order Differential Equation

In this case, we can perform a simple integration

Differential Equation:

$$\frac{dv}{dt} + \frac{v}{RC} = 0$$

$$\frac{dv}{v} = -\frac{1}{RC}dt$$

Integrate both sides:

$$\int \frac{dv}{v} = -\int \frac{1}{RC}dt$$

$$\ln(v) = -\frac{t}{RC} + K$$

(K=unknown constant)

Take exponent of both sides:

$$v = e^{-t/RC+K}$$

$$v(t) = Ae^{-t/RC}$$

(A=unknown constant)

Use initial condition to determine unknown constant A

$$v(0) = V_0 = Ae^{-0/RC} = A$$

$$\boxed{v(t) = V_0 e^{-t/RC}}$$

Time Constant

The time constant is the time required for the response to decay to 1/e of the initial value

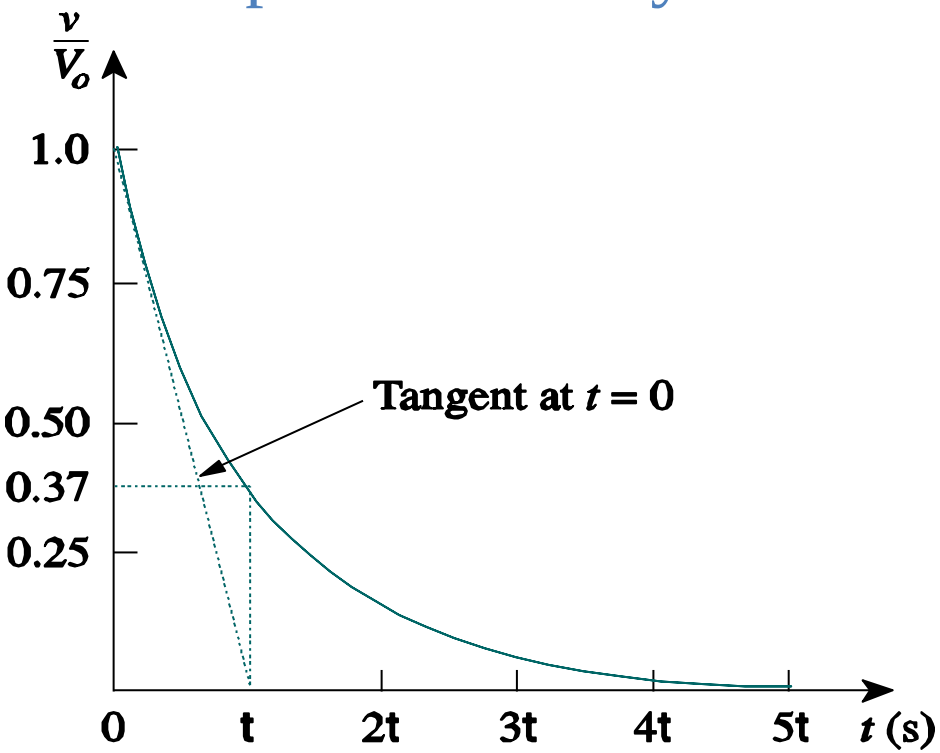

$$v(t) = V_0 e^{-t/RC} = V_0 e^{-t/\tau}$$

$$\tau = RC$$

$$\left.\frac{d}{dt}\left(\frac{v}{V_0}\right)\right|_{t=0} = -\frac{1}{\tau} e^{-t/\tau}\Big|_{t=0} = -\frac{1}{\tau}$$

What will response for longer/shorter τ look like?

Response Terminology

Source dependence

Natural response – response in absence of sources

Forced response – response due to external source

Complete response = Natural + Forced

Time dependence

Transient response – time varying response (temporary)

Steady state response – time independent (permanent)

Complete response = Transient + Steady State

First Order Circuits - Tips

- Determine what you are looking for, what you know
- Rewrite circuit in Thevenin or Norton equivalent
- Use superposition if you have multiple sources
- Determine solution from initial and steady state conditions

Example: this circuit is straightforward if you replace the current source and 2 ohm resistor with Thevenin equivalent

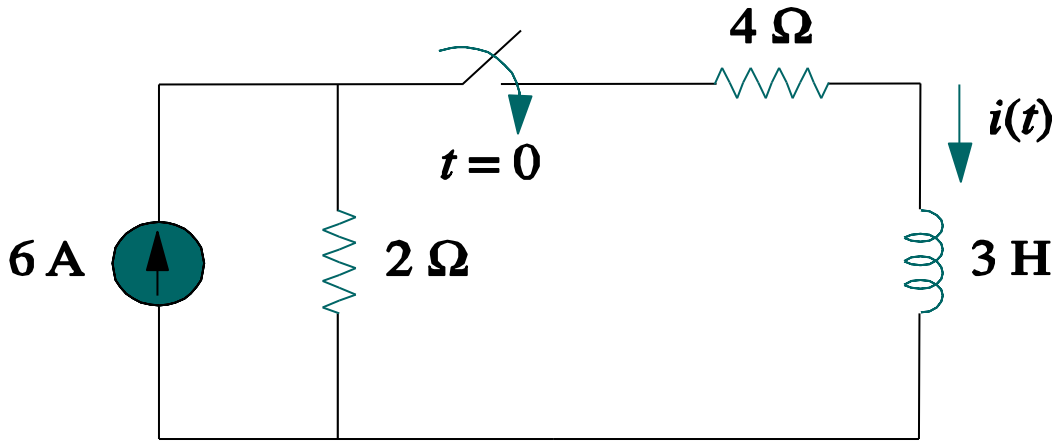

DC Conditions

- Under DC Conditions, All d/dt Terms Are ZERO
  - $I_c=0$, $V_L=0$
  - Capacitors Act Like Open Circuits, Inductors Act Like Short Circuits
- Easy Issue for FOC's, but Generally True for DC Conditions and Very Helpful for Higher Order Circuits

Example

Find Initial Condition on Capacitor for t<0

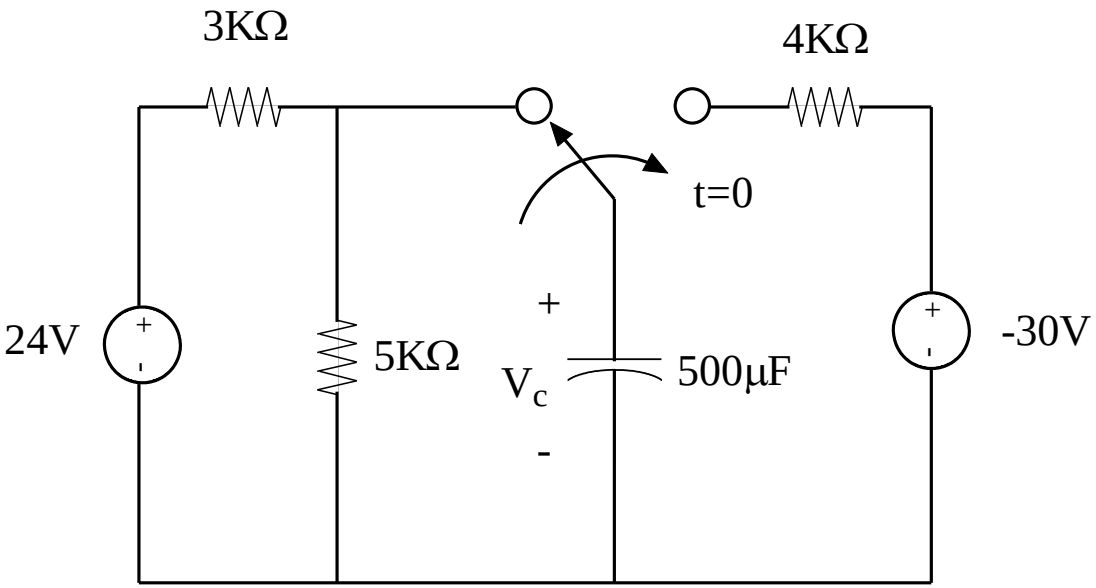

Example

Find Initial Condition on Capacitor for t<0

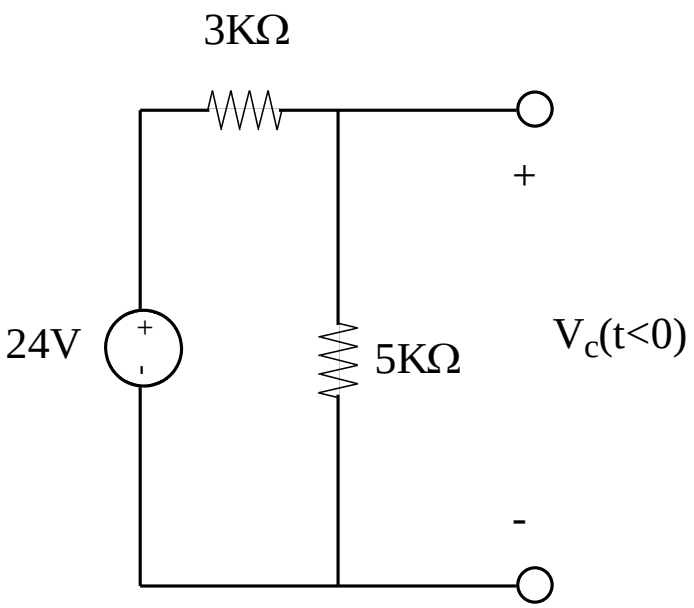

Voltage Divider

$$V_c(t<0) = \frac{5K\Omega}{5K\Omega + 3K\Omega} 24V = 15V$$

Example

Find Forced Solution:
$V_{Cf}=V_C(t\rightarrow\infty)$

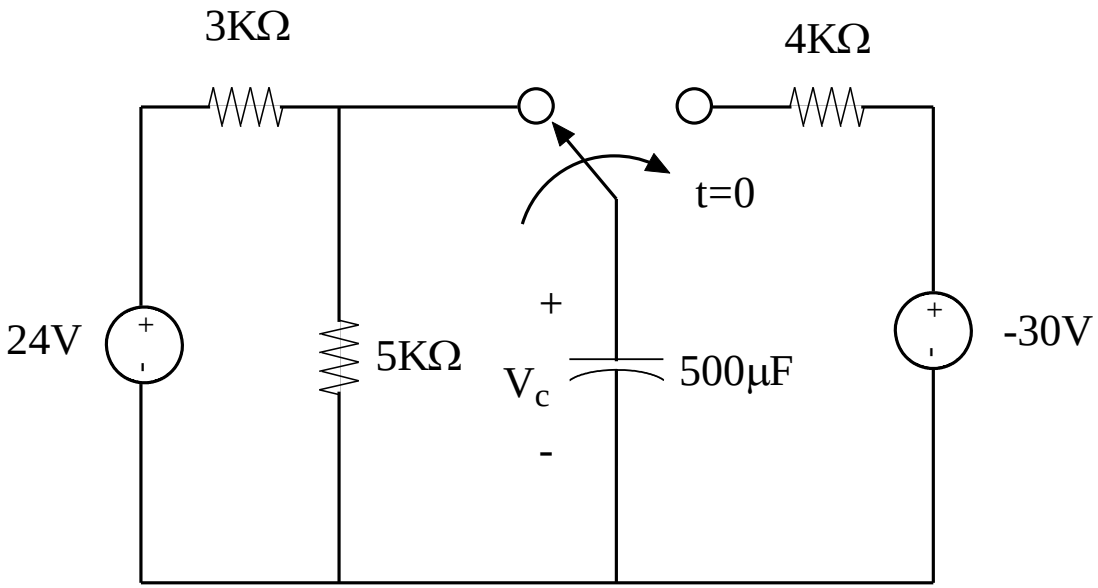

Example

Find Forced Solution:
$V_{Cf}=V_C(t\rightarrow\infty)$

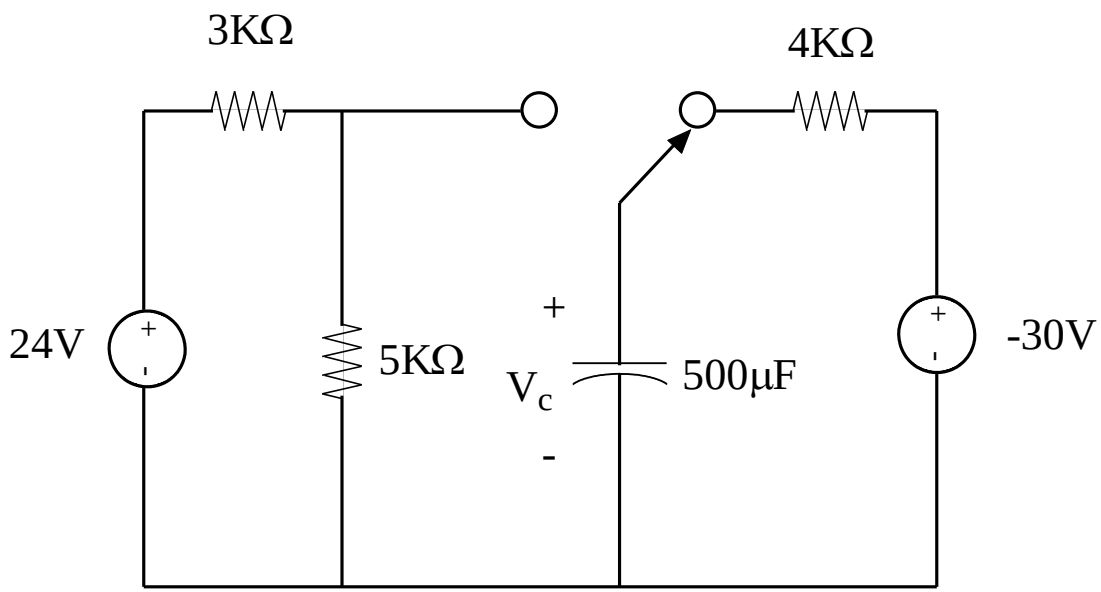

Find Natural Solution

Example

Match Initial Condition

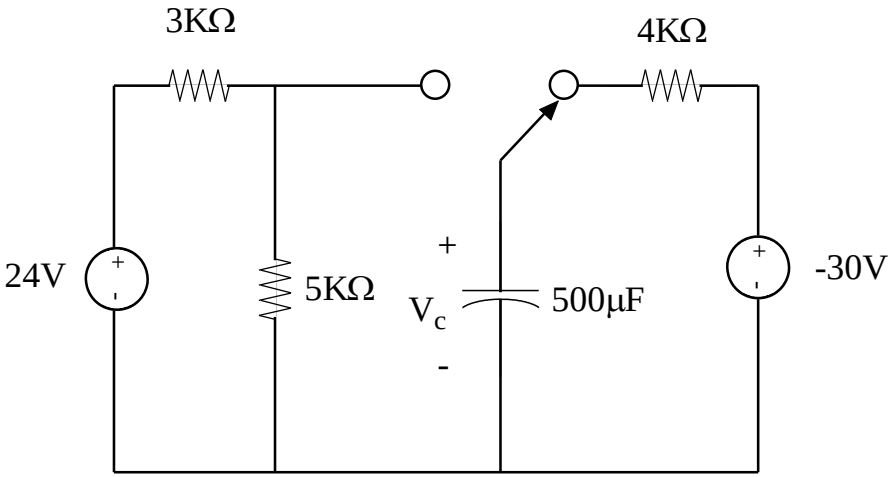

Example

$$Initial\ Condition: V_c(0) = 15V$$

$$V_{Cf} = -30V$$

$$Natural\ Solution: V_{cn}(t) = Ae^{-t/\tau}$$

$$with\ \tau = (4K\Omega)(500\mu F) = 2s$$

$$Complete\ Solution:\ V_c(t) = V_{Cf} + V_{Cn}$$

$$V_c(t) = -30V + Ae^{-t/2s}$$

$$Match\ Initial\ Condition\ at\ t = 0^+$$

$$V_c(0) = 15V = -30V + A \rightarrow A = 45V$$

$$V_c(t) = -30V + (45V)e^{-t/2s}$$

$$i_c(t) = C\frac{\partial V_c}{\partial t} = (-11.25mV)e^{-t/2s}$$

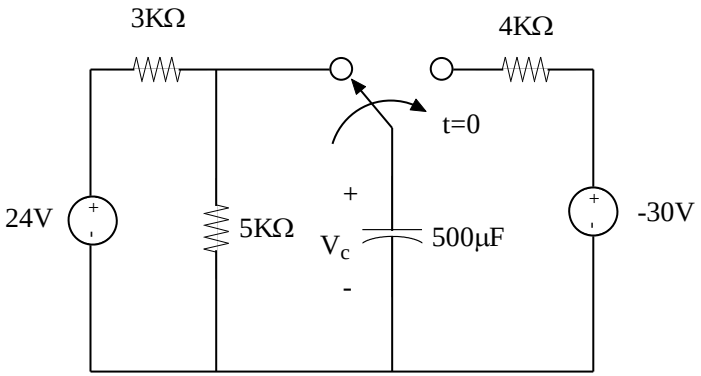

Example

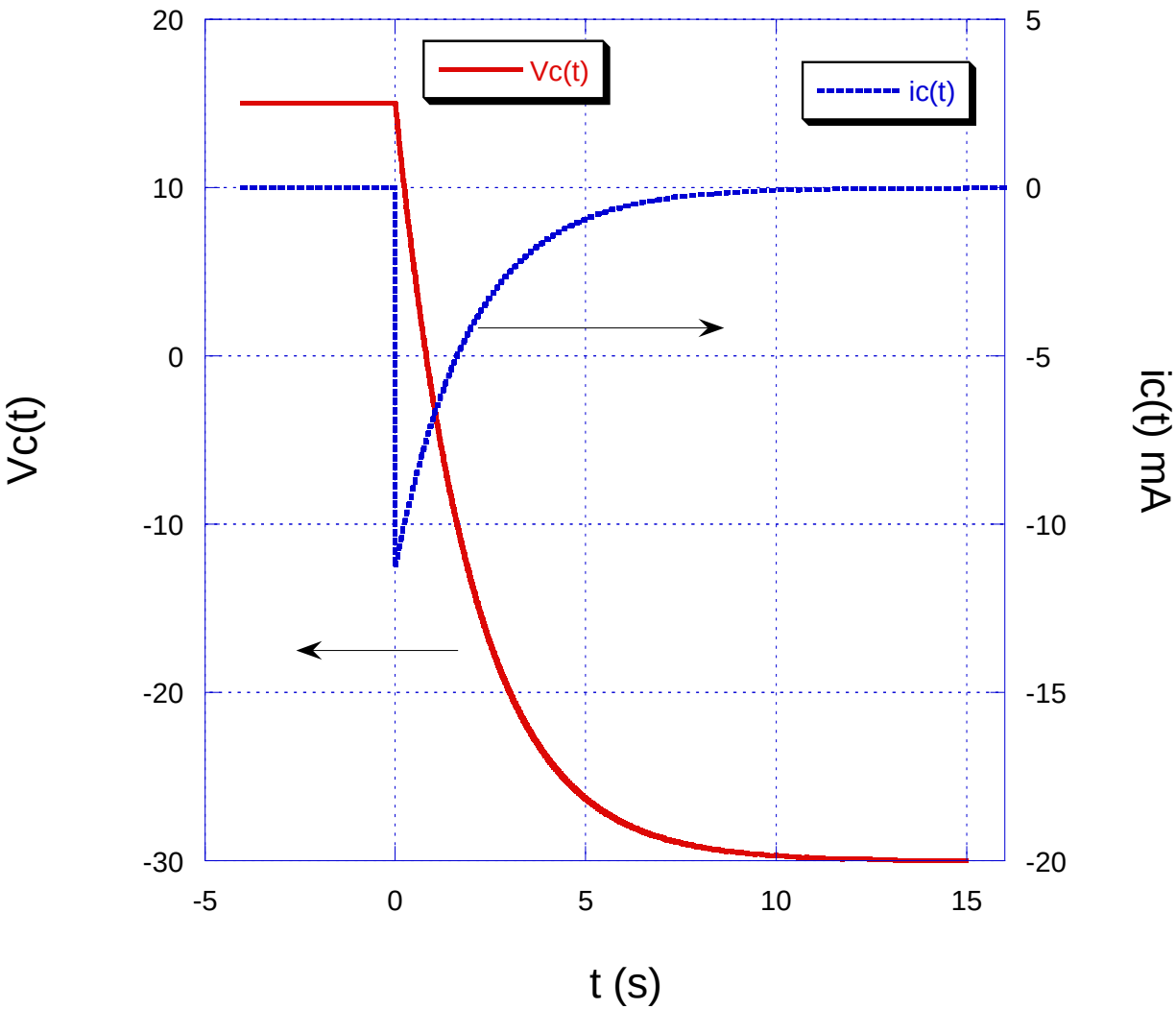
Vc(t)
ic(t)
20
10
0
-10
-20
-30
5
0
-5
-10
-15
-20
-5
0
5
10
15
Vc(t)
ic(t) mA
t (s)

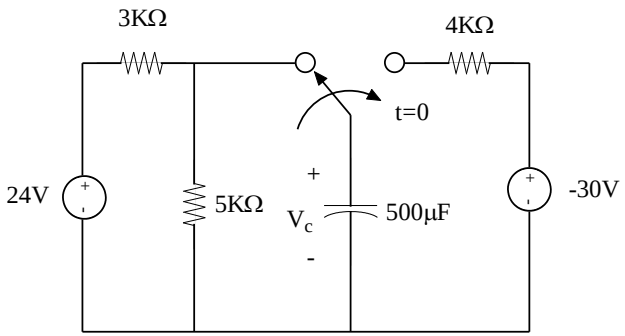
3KΩ
4KΩ
t=0
24V
5KΩ
+
Vc
-
500μF
-30V

Unit Step Response

$$u(t) = \begin{Bmatrix} 0 \,\forall t < 0 \\ 1 \,\forall t \geq 0 \end{Bmatrix}$$

$$\textit{sometimes written } u_0(t)$$

$$u(t - t_0) = \begin{Bmatrix} 0 \,\forall t < t_0 \\ 1 \,\forall t \geq t_0 \end{Bmatrix}$$

- Useful way to characterize the time response of linear systems
- Directly interesting for speed of digital systems
- Can use a series of steps to approximate any signal

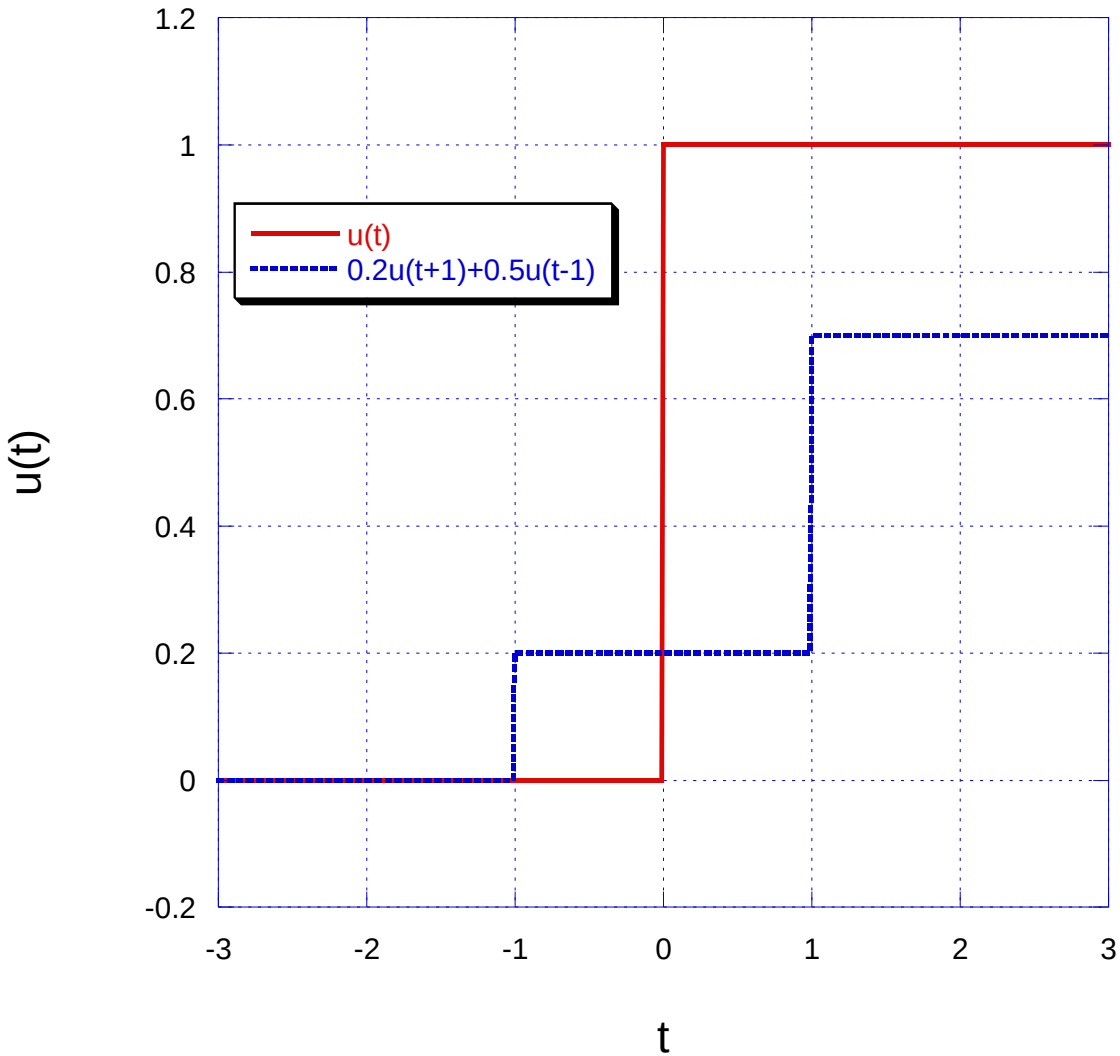

Unit Step Response of RC Circuit: Natural Response & Initial Conditions

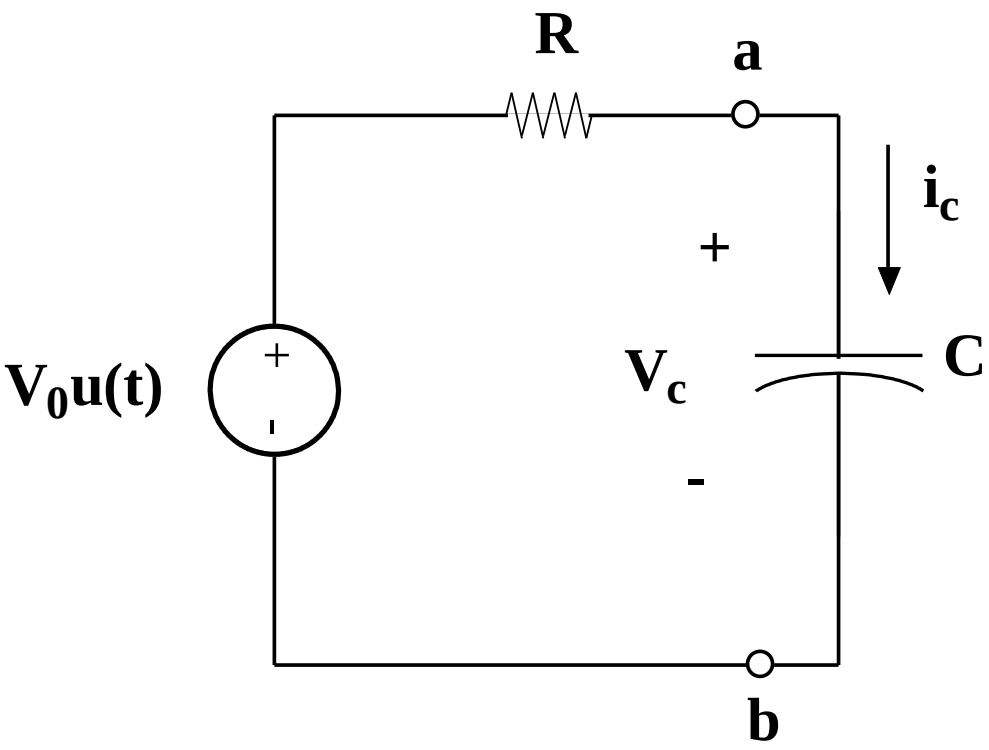

Unit Step Response of RC Circuit: Forced Response

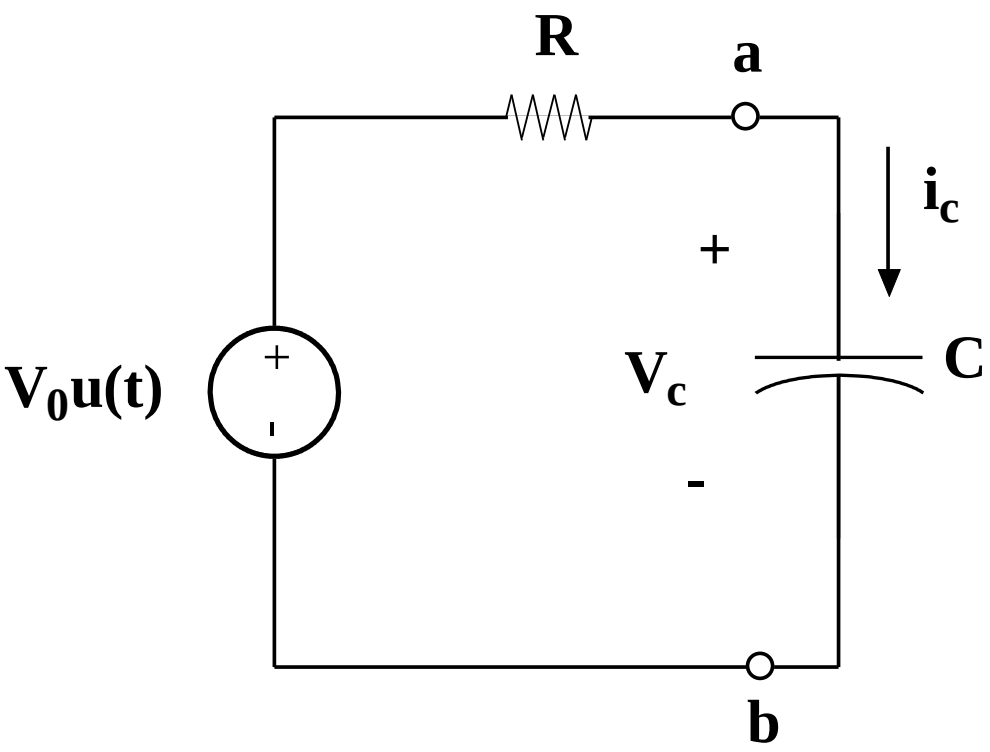

Unit Step Response of RC Circuit: Total Response/Match Initial Condition

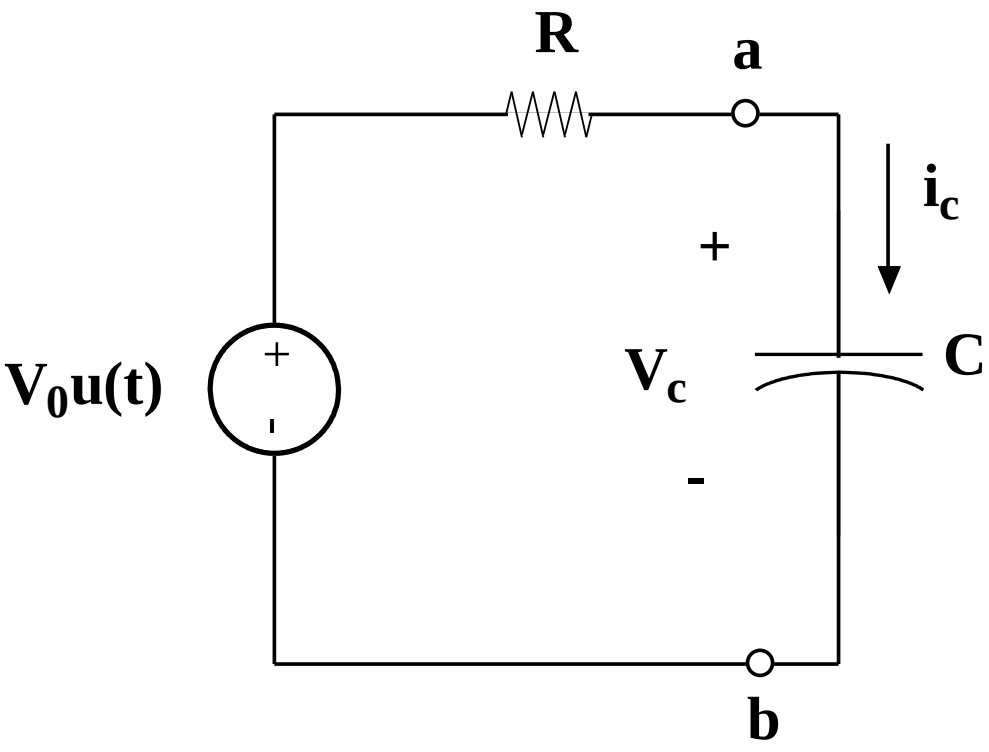

Unit Step Response of RC Circuit

Initial Condition

$$V_c(t) = 0 \; \forall t < 0$$

$$for \;\; t \geq 0$$

$$i_c R + V_c = V_0 \qquad KVL$$

$$RC\frac{\partial V_c}{\partial t} + V_c = V_0$$

Natural solution solves

$$RC\frac{\partial V_c}{\partial t} + V_c = 0$$

Forced solution is one solution of

$$RC\frac{\partial V_c}{\partial t} + V_c = V_0$$

$$\left(Natural + Forced\right) = General\,/\,Complete\,Solution$$

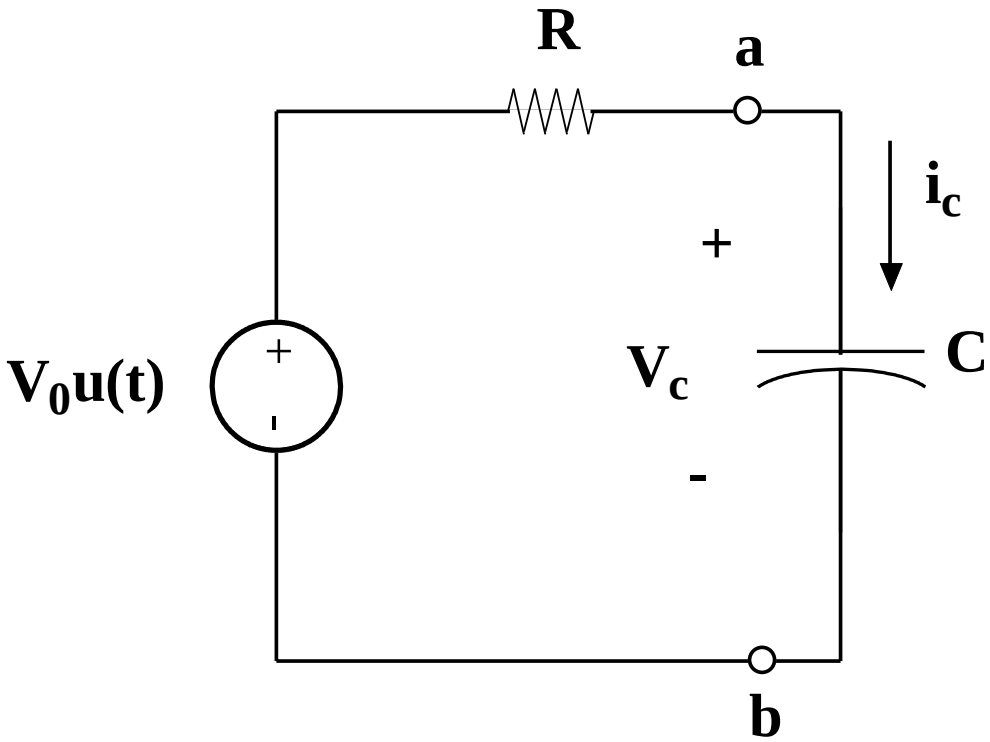

Unit Step Response of RC Circuit

$$Initial\ Condition\ V_c(t) = 0\ \forall t < 0$$

$$for\ \ t \geq 0 \quad RC\frac{\partial V_c}{\partial t} + V_c = V_0$$

$$Natural\ solution:\ Ae^{-t/\tau} \qquad \tau = RC$$

$$Forced\ solution\ of\ 1st\ Order\ ODE\ is\ of\ \ form\ of\ \ forcing\ \ function$$

$$V_{cf} = cons\tan t$$

$$RC\frac{\partial V_{cf}}{\partial t} + V_{cf} = V_0 \rightarrow V_{cf} = V_0$$

$$\left(Natural + Forced\right) = General\ /\ Complete\ Solution$$

$$V_c(t) = Ae^{-t/\tau} + V_0$$

$$Match\ Initial\ Condition$$

$$V_c(0) = 0 = A + V_0 \rightarrow A = -V_0$$

$$\rightarrow V_c(t) = -V_0 e^{-t/\tau} + V_0 = V_0\left(1 - e^{-t/\tau}\right)$$

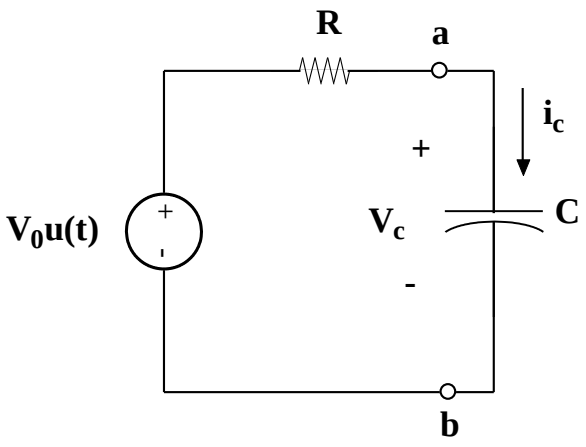

RC Unit Step Response

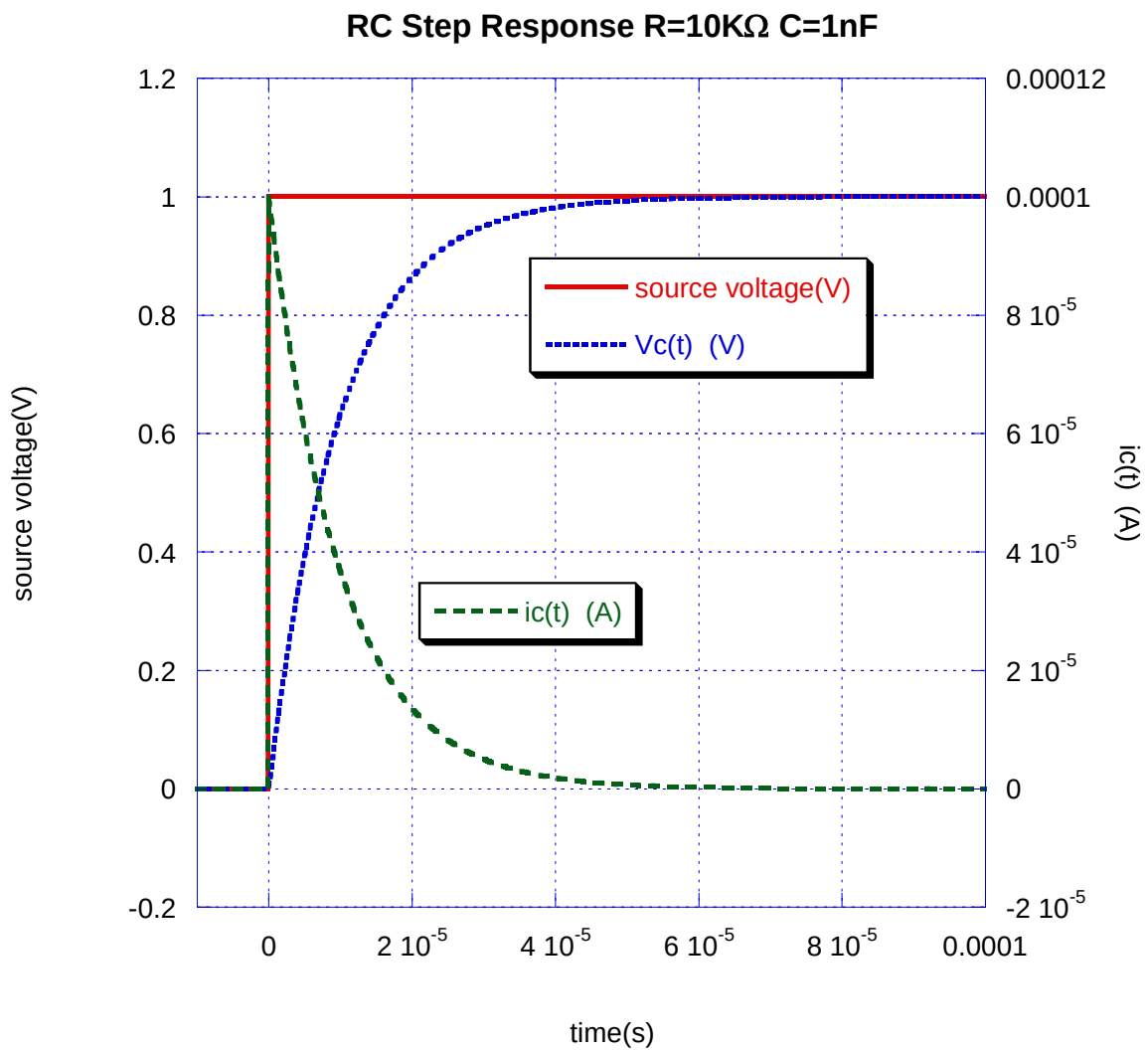

More Complex Response Example

- Object: Find $V_{ab}(t)$ given $I_s(t)$, $V_s(t)$, C
- Approach: Find the Thevenin equivalent circuit that the capacitor "sees"
- Could Use Superposition to find $V_{ab,oc}$ from V_s and I_s sources independently, then add result

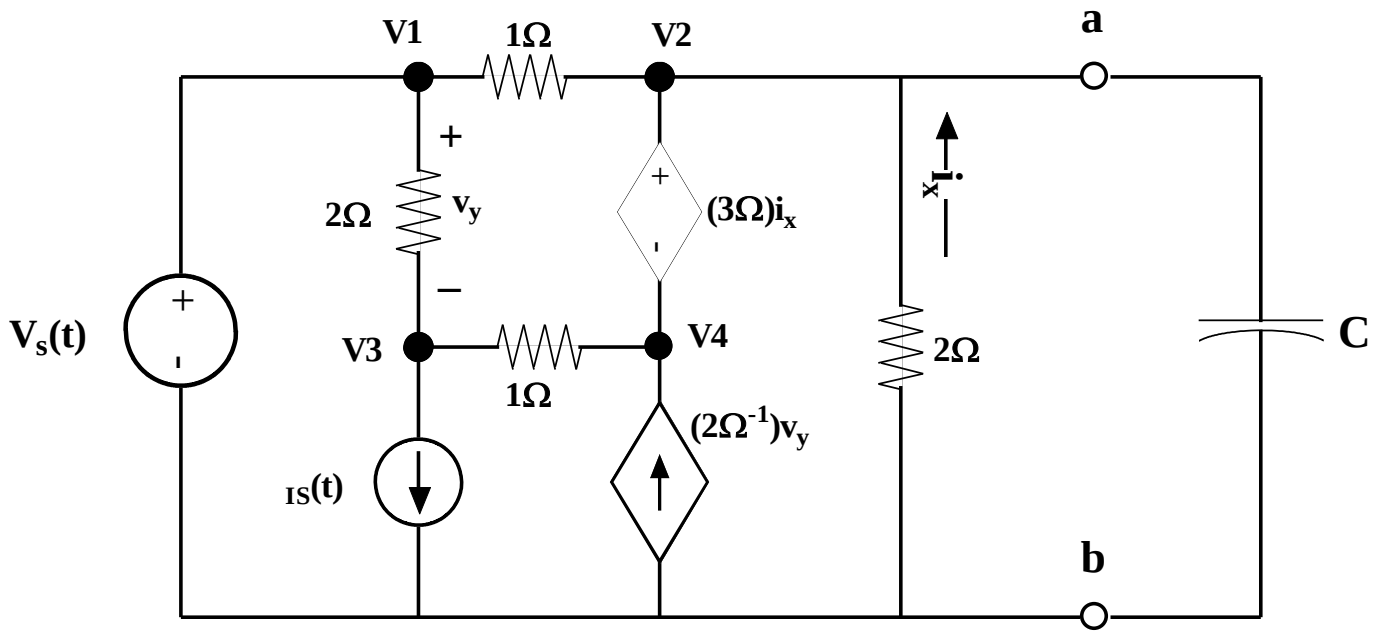

Nodal Analysis 2

- Write KCL Equations
  - KCL at SN:

$$\frac{V_s - v_2}{1\Omega} + \frac{v_3 - v_4}{1\Omega} + i_x + 2\Omega^{-1} v_y = 0$$

  - KCL at Node 3:

$$\frac{V_s - v_3}{2\Omega} + \frac{v_4 - v_3}{1\Omega} = I_s$$

- Conditions on Dependent Sources

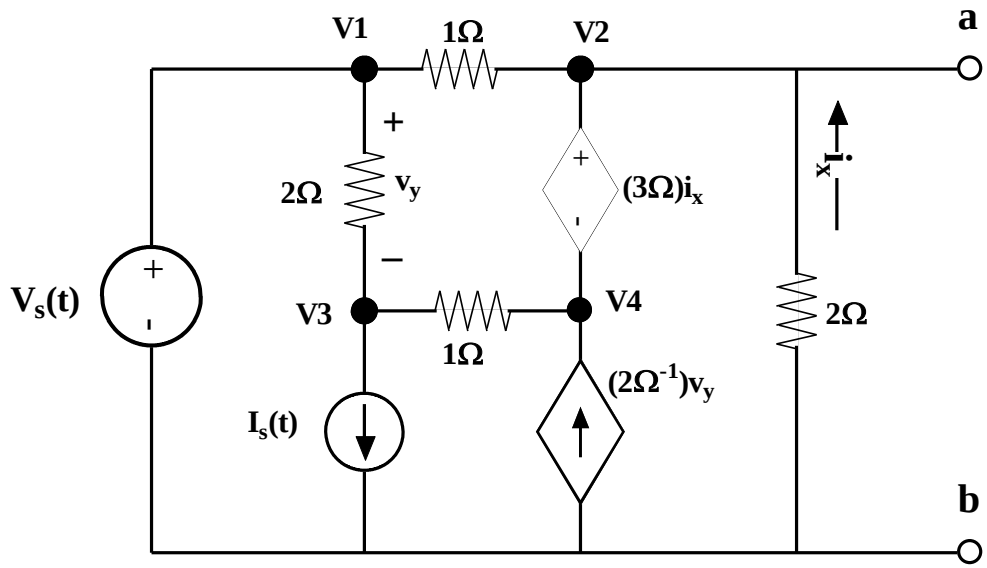

$$i_x = -\frac{v_2}{2\Omega}$$

$$v_y = \left(v_1 - v_3\right)$$

$$v_4 = \left(v_2 - (3\Omega) i_x\right) = \left(v_2 + (3\Omega)\frac{v_2}{2\Omega}\right) = 2.5 v_2$$

Nodal Analysis 3

- Insert Dependent Source Condition Equations into KCL equations
  - SN:

$$\frac{V_s - v_2}{1\Omega} + \frac{v_3 - 2.5v_2}{1\Omega} + \left(-\frac{v_2}{2\Omega}\right) + 2\Omega^{-1}(V_s - v_3) = 0$$

$$\Rightarrow v_2\left[4\Omega^{-1}\right] + v_3\left[1\Omega^{-1}\right] = \left(3\Omega^{-1}\right)V_s$$

  - Node 3:

$$\frac{V_s - v_3}{2\Omega} + \frac{2.5v_2 - v_3}{1\Omega} = I_s$$

$$\Rightarrow v_2\left[2.5\Omega^{-1}\right] + v_3\left[-1.5\Omega^{-1}\right] = \left[I_s - \left(0.5\Omega^{-1}\right)V_s\right]$$

- Solve for $v_2 = V_{TH}$

$$\begin{bmatrix} 4\Omega^{-1} & 1\Omega^{-1} \\ 2.5\Omega^{-1} & -1.5\Omega^{-1} \end{bmatrix}\begin{bmatrix} v_2 \\ v_3 \end{bmatrix} = \begin{bmatrix} \left(3\Omega^{-1}\right)V_s \\ I_s - \left(0.5\Omega^{-1}\right)V_s \end{bmatrix}$$

$$\Rightarrow \begin{bmatrix} v_2 \\ v_3 \end{bmatrix} = \left(\frac{1}{17}\right)\begin{bmatrix} 3\Omega & 3\Omega \\ 5\Omega & -8\Omega \end{bmatrix}\begin{bmatrix} \left(3\Omega^{-1}\right)V_s \\ I_s - \left(0.5\Omega^{-1}\right)V_s \end{bmatrix}$$

$$\Rightarrow v_2 = \left(\frac{1}{17}\right)\left[8V_s + (2\Omega)I_s\right]$$

Thevenin Equivalent

- Note that Req=(3/17) Ω which we found long ago has not changed.

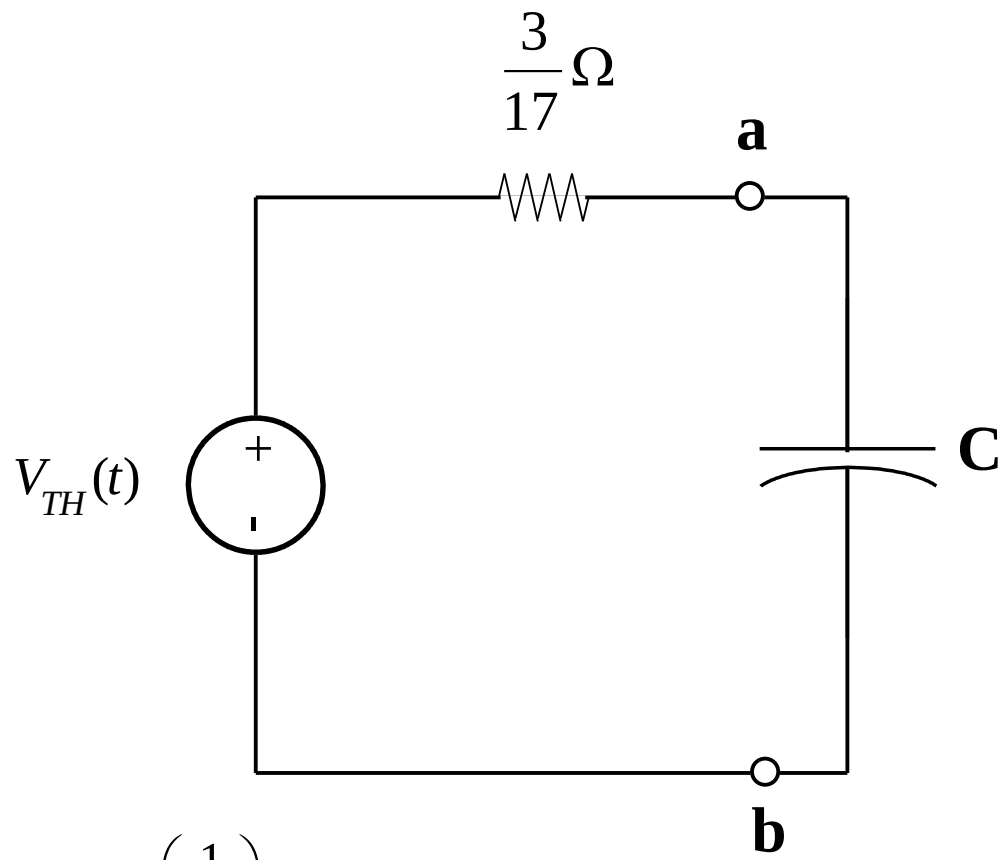

$$V_{TH}(t)=\left(\frac{1}{17}\right)\left[8V_s(t)+(2\Omega)I_s(t)\right]$$

Numeric Example

- Now assume C=17μF
- $V_s(t)$=17 u(t) V
- $I_s(t)$=17 u(t-6μs) A

$$V_{TH}(t)=\left[8u(t)+2u(t-6\mu s)\right]$$

$$RC=\tau=\left(\frac{3}{17}\Omega\right)17\mu F=3\mu s$$

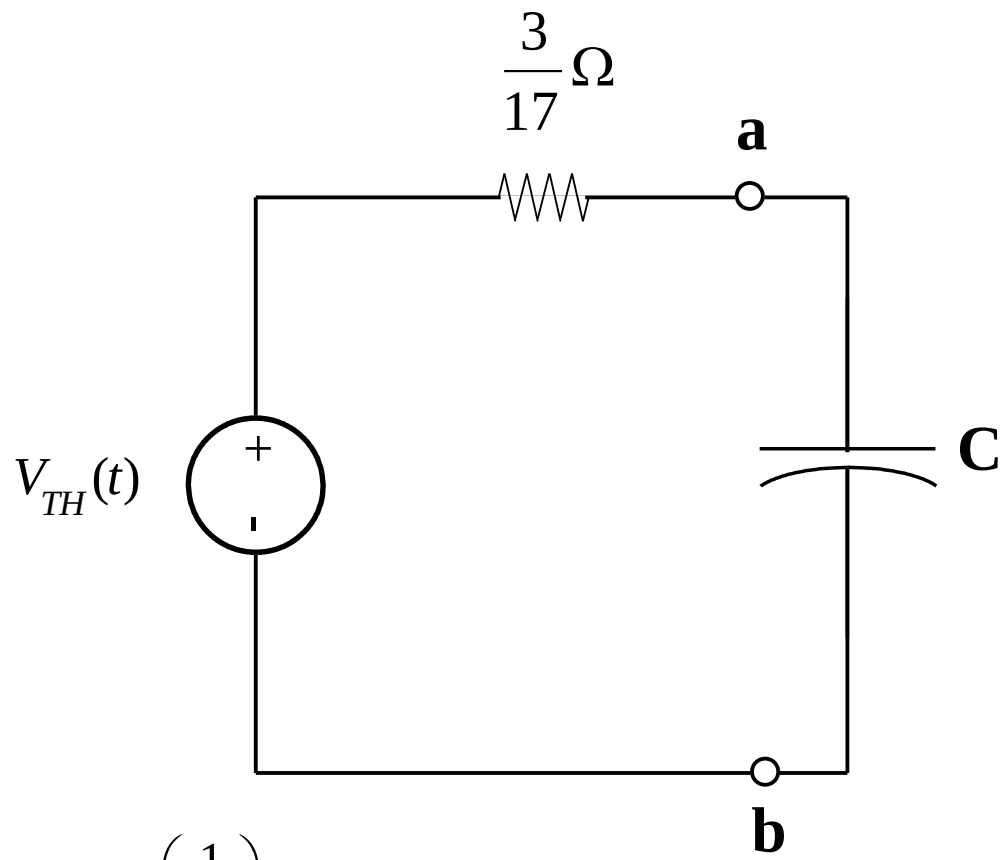

$$V_{TH}(t)=\left(\frac{1}{17}\right)\left[8V_s(t)+(2\Omega)I_s(t)\right]$$

Numeric Example

$$V_{TH}(t) = \left[8(t) + 2u(t - 6\mu s)\right] \qquad RC = \tau = \left(\frac{3}{17}\Omega\right)17\mu F = 3\mu s$$

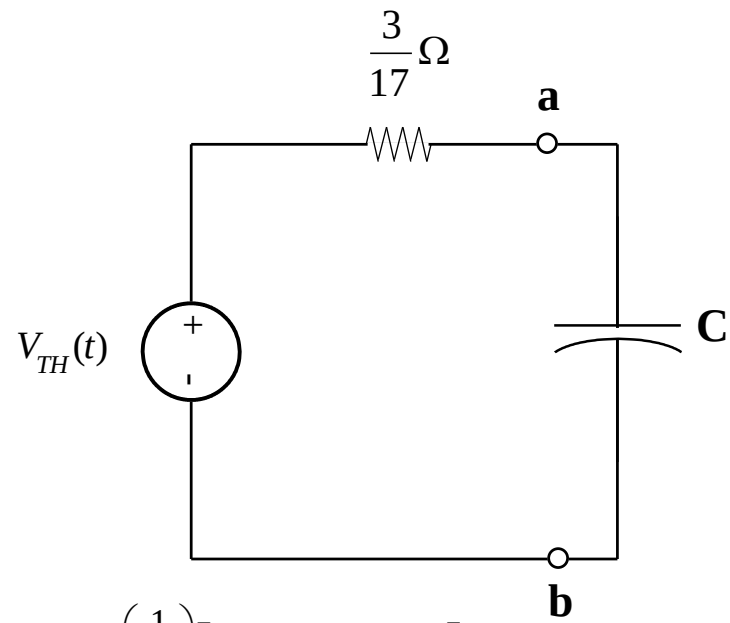

$$V_{TH}(t) = \left(\frac{1}{17}\right)\left[8V_s(t) + (2\Omega)I_s(t)\right]$$

Numeric Example

$$V_{TH}(t) = \left[8(t) + 2u(t - 6\mu s)\right] \qquad RC = \tau = \left(\frac{3}{17}\Omega\right)17\mu F = 3\mu s$$

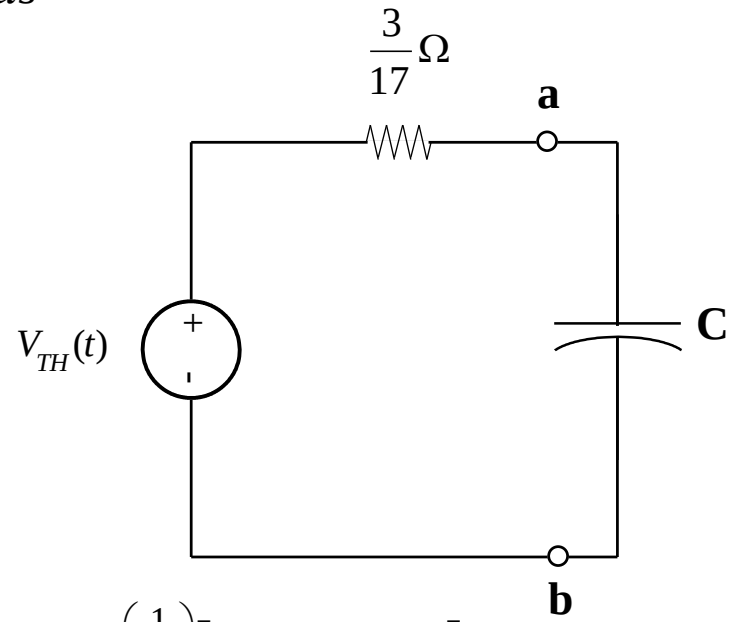

$$V_{TH}(t) = \left(\frac{1}{17}\right)\left[8V_s(t) + (2\Omega)I_s(t)\right]$$

Numeric Example

$$V_{TH}(t) = \left[8u(t) + 2u(t - 6\mu s)\right]$$

$$RC = \tau = \left(\frac{3}{17}\Omega\right)17\mu F = 3\mu s$$

$$(t < 0) \quad V_c(t) = 0$$

$$(0 \le t < 6\mu s)$$

$$V_c(t) = 8\left(1 - e^{-t/\tau}\right)V$$

$$(t \ge 6\mu s)$$

$$V_c(6\mu s) = 8\left(1 - e^{-6\mu s/\tau}\right)V = 8\left(1 - e^{-2}\right)V \quad \textit{New Initial Condition}$$

$$V_c(6\mu s) \equiv V_{C1} \approx 6.9173V$$

$$V_c(t \to \infty) = 10V \quad \textit{New Forced Solution}$$

$$V_c(6\mu s) = V_{C1} = 10V + Ae^{-(t-6\mu s)/\tau} \to A = \left(V_{C1} - 10V\right)$$

$$V_c(t) = \left[10 - \left(10 - V_{C1}\right)e^{-(t-6\mu s)/3\mu s}\right]V \approx \left[10 - 3.0827e^{-(t-6\mu s)/3\mu s}\right]V$$

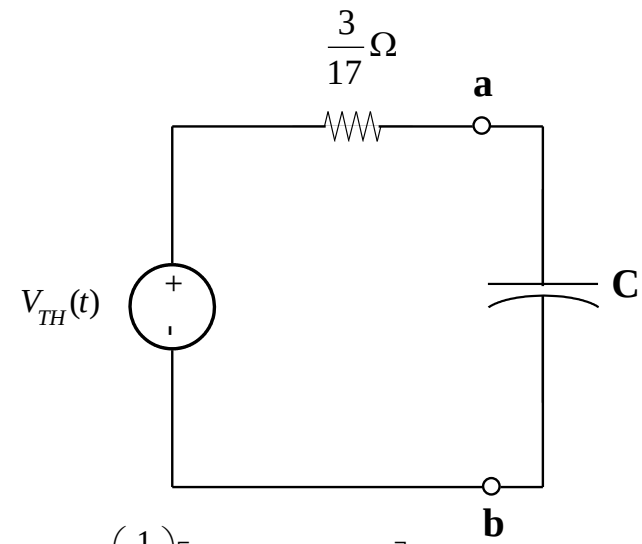

$$V_{TH}(t) = \left(\frac{1}{17}\right)\left[8V_s(t) + (2\Omega)I_s(t)\right]$$

Numeric Example

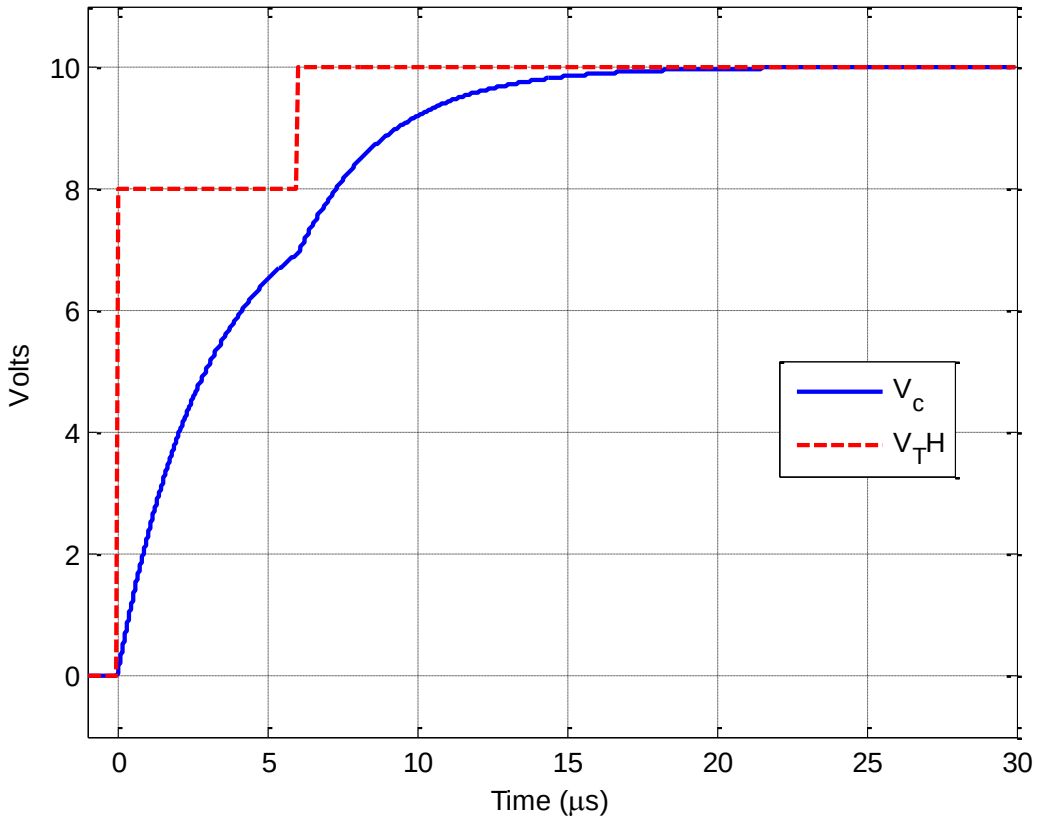

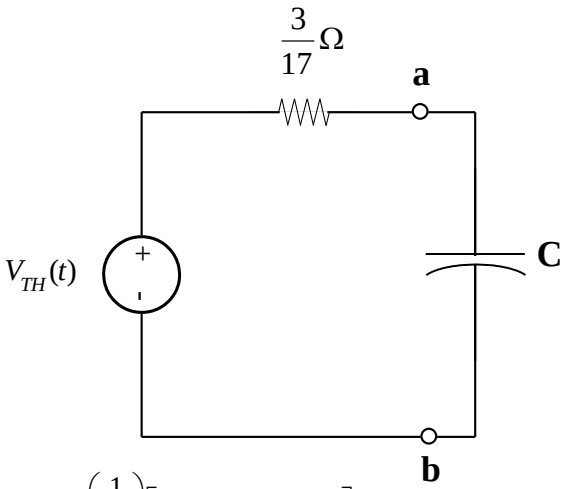

$$V_{TH}(t)=\left(\frac{1}{17}\right)\left[8V_s(t)+(2\Omega)I_s(t)\right]$$

Inductor Circuit Step Response

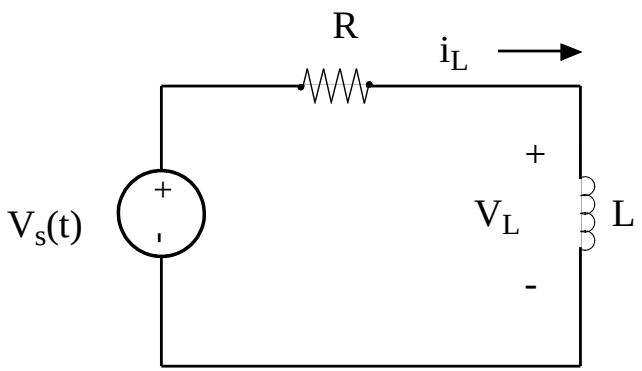

Inductor Circuit Step Response

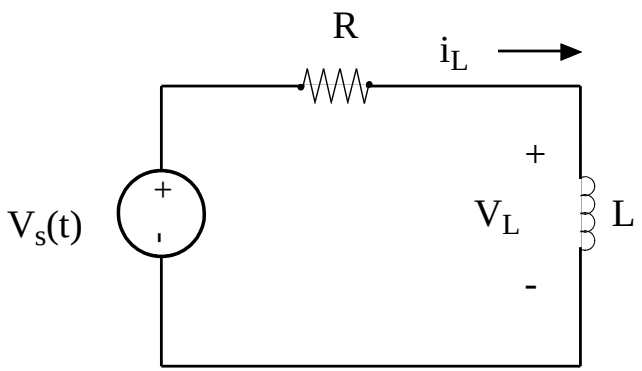

Inductor Circuit Step Response

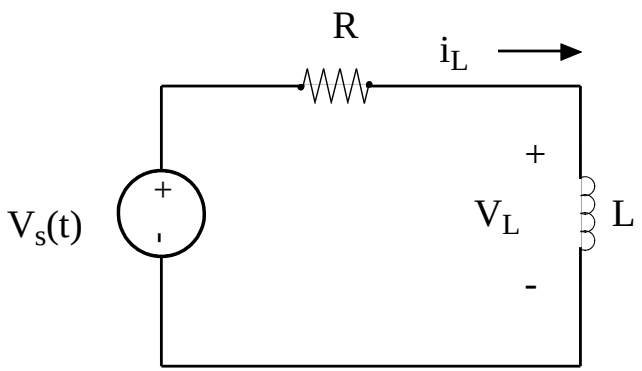

Time Varying forcing Function

- For a 1st order ODE with a time varying forcing function f(t)
  - Try Forced Solutions of the form Af(t)+Bf'(t)
  - Plug in to ODE and find A, B
- For a 2nd order ODE (SOC) with a time varying forcing function f(t)
  - Try Forced Solutions of the form Af(t)+Bf' (t)+Cf'' (t)
  - Plug in to ODE and find A, B, C

Example: Ramp Into Inductor

Assume

$$V_s(t) = V_0 + (At)u(t)$$

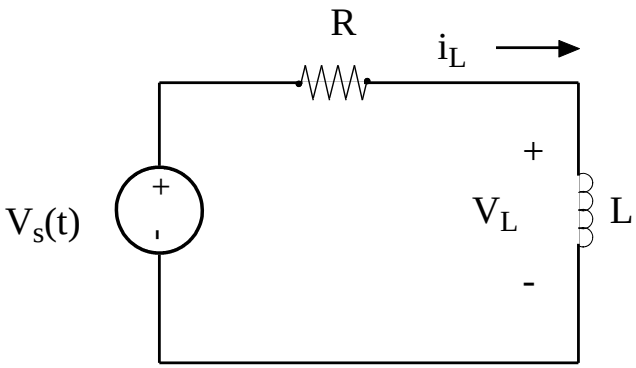

Voltage Ramp Starting at t=0

Find Initial Condition

Example: Ramp Into Inductor

Assume

$$V_s(t) = V_0 + (At)u(t)$$

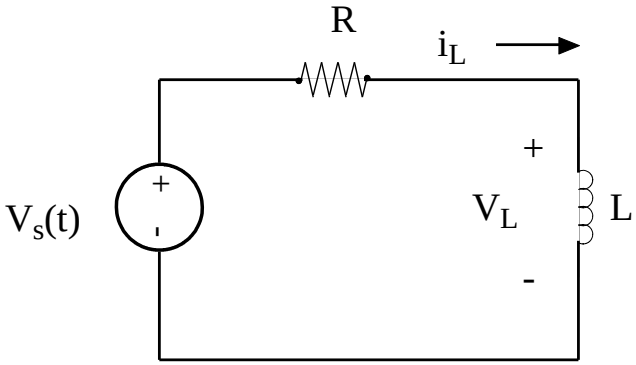

Differential Equation:

$$V_s(t) = RI_L + V_L$$

$$= RI_L + L\frac{\partial I_L}{\partial t}$$

$$RI_L + L\frac{\partial I_L}{\partial t} = (V_0 + At) \quad \forall t \geq 0$$

Example: Ramp Into Inductor

Assume

$$V_s(t) = V_0 + (At)u(t)$$

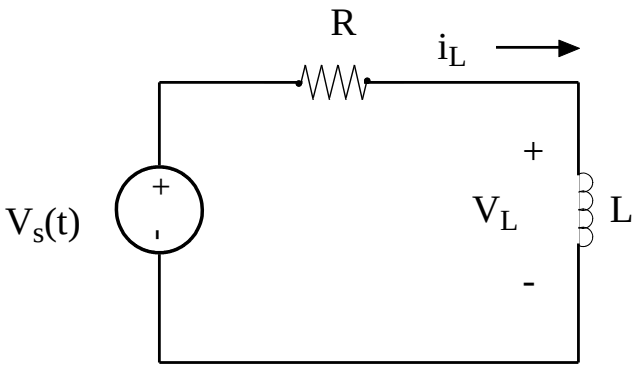

Natural Solution Unchanged:

$$RI_L + L\frac{\partial I_L}{\partial t} = 0 \rightarrow I_{Ln}(t) = Be^{-t/\tau}$$

$$\tau = L/R$$

What is Forced Solution?
It is no longer constant with time

Example: Ramp Into Inductor

Assume

$$V_s(t) = V_0 + (At)u(t)$$

Forced Solution of:

$$RI_L + L\frac{\partial I_L}{\partial t} = (V_0 + At) \quad \forall t \geq 0$$

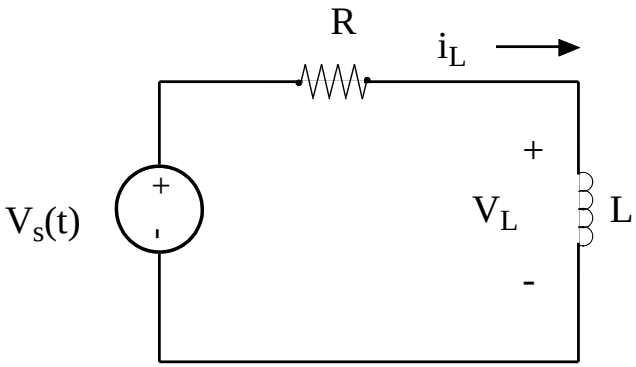

Example: Ramp Into Inductor

Assume

$$V_s(t) = V_0 + (At)u(t)$$

Complete Solution and Match Initial Conditions

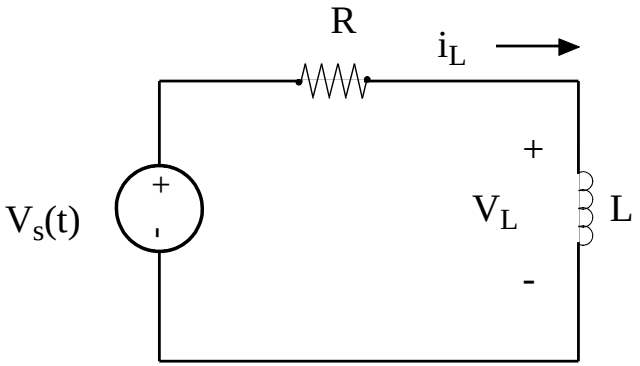

Numerical Example: Ramp Into Inductor

Assume

$$V_s(t) = V_0 + (At)u(t)$$

$$I_{Lf} = D + Ft$$

$$I_{Ln} = Be^{-tR/L}$$

$$I_L(t) = \frac{1}{R}(V_0 + At) + \frac{LA}{R^2}\left(e^{-tR/L} - 1\right)$$

Let :

$$V_0 = 1V \quad A = 10^7\, V/s$$

$$\left\{\begin{matrix} L = 1mH \\ R = 10K\Omega \end{matrix}\right\} \rightarrow \tau = 0.1\mu s \;\&\; \frac{V_0}{R} = 0.1mA$$

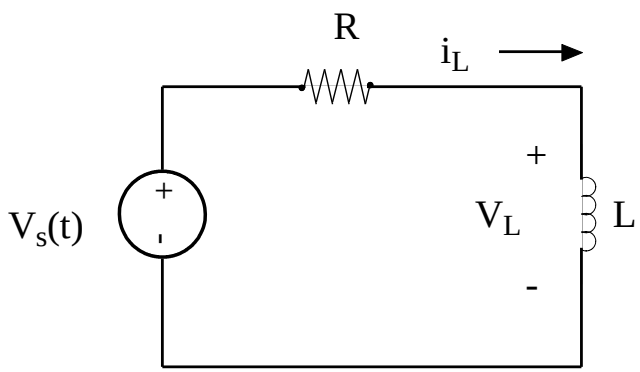

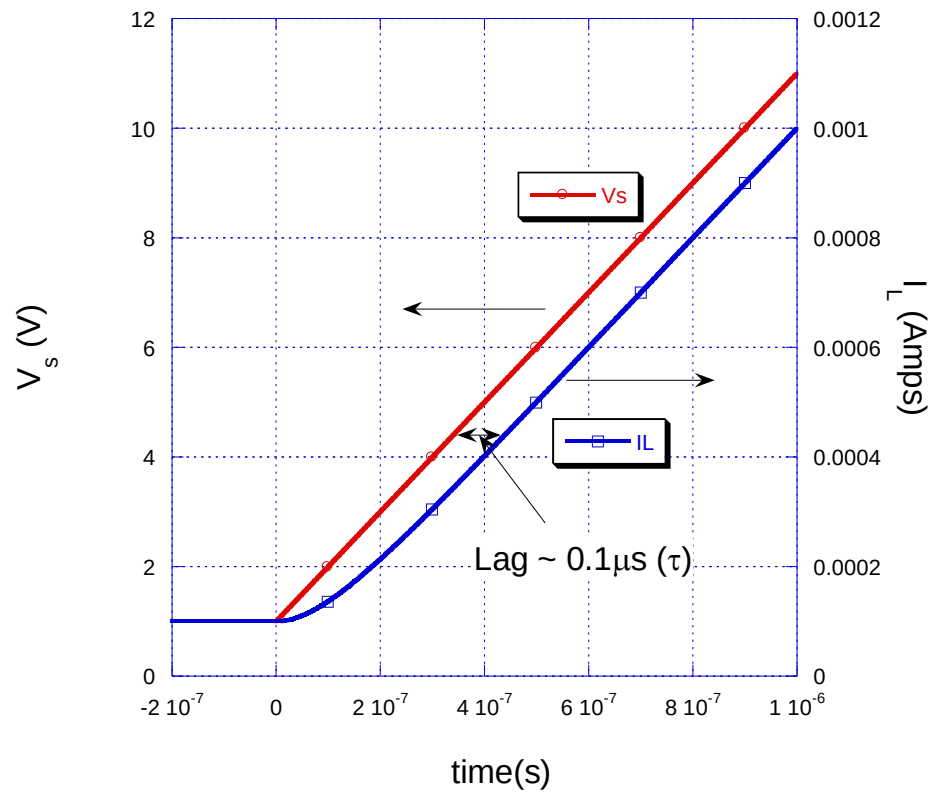

Numerical Example: Cosine Wave into RC

$$V_s(t) = V_0 \cos(\omega t) u(t)$$

$$V_C + RC \frac{\partial V_C}{\partial t} = V_s(t) = V_0 \cos(\omega t) u(t)$$

$$\frac{\partial V_C}{\partial t} + \frac{V_C}{\tau} = \frac{V_0}{\tau} \cos(\omega t) \quad \forall t \geq 0 \ , \ \tau = RC$$

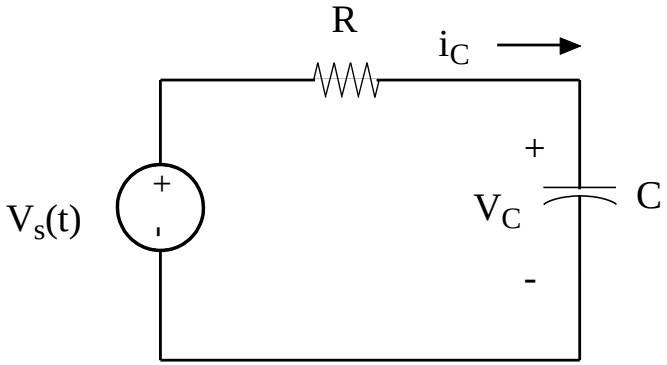

Initial Condition:

Natural Solution:

Numerical Example: Cosine Wave into RC

Forced Solution:

$$V_s(t) = V_0 \cos(\omega t) u(t)$$

$$V_C + RC \frac{\partial V_C}{\partial t} = V_s(t) = V_0 \cos(\omega t) u(t)$$

$$\frac{\partial V_C}{\partial t} + \frac{V_C}{\tau} = \frac{V_0}{\tau} \cos(\omega t) \quad \forall t \geq 0 \ , \ \tau = RC$$

Numerical Example: Cosine Wave into RC

$$V_s(t) = V_0 \cos(\omega t) u(t)$$

$$V_C + RC \frac{\partial V_C}{\partial t} = V_s(t) = V_0 \cos(\omega t) u(t)$$

$$\frac{\partial V_C}{\partial t} + \frac{V_C}{\tau} = \frac{V_0}{\tau} \cos(\omega t) \quad \forall t \geq 0 \ , \ \tau = RC$$

Complete Solution:

$$V_C = \left[\frac{V_0}{1 + (\omega\tau)^2} \right] \left[\cos(\omega t) + (\omega\tau) \sin(\omega t) \right] + A e^{-t/\tau}$$

Match Initial Conditions for Complete Solution:

Numerical Example: Cosine Wave into RC

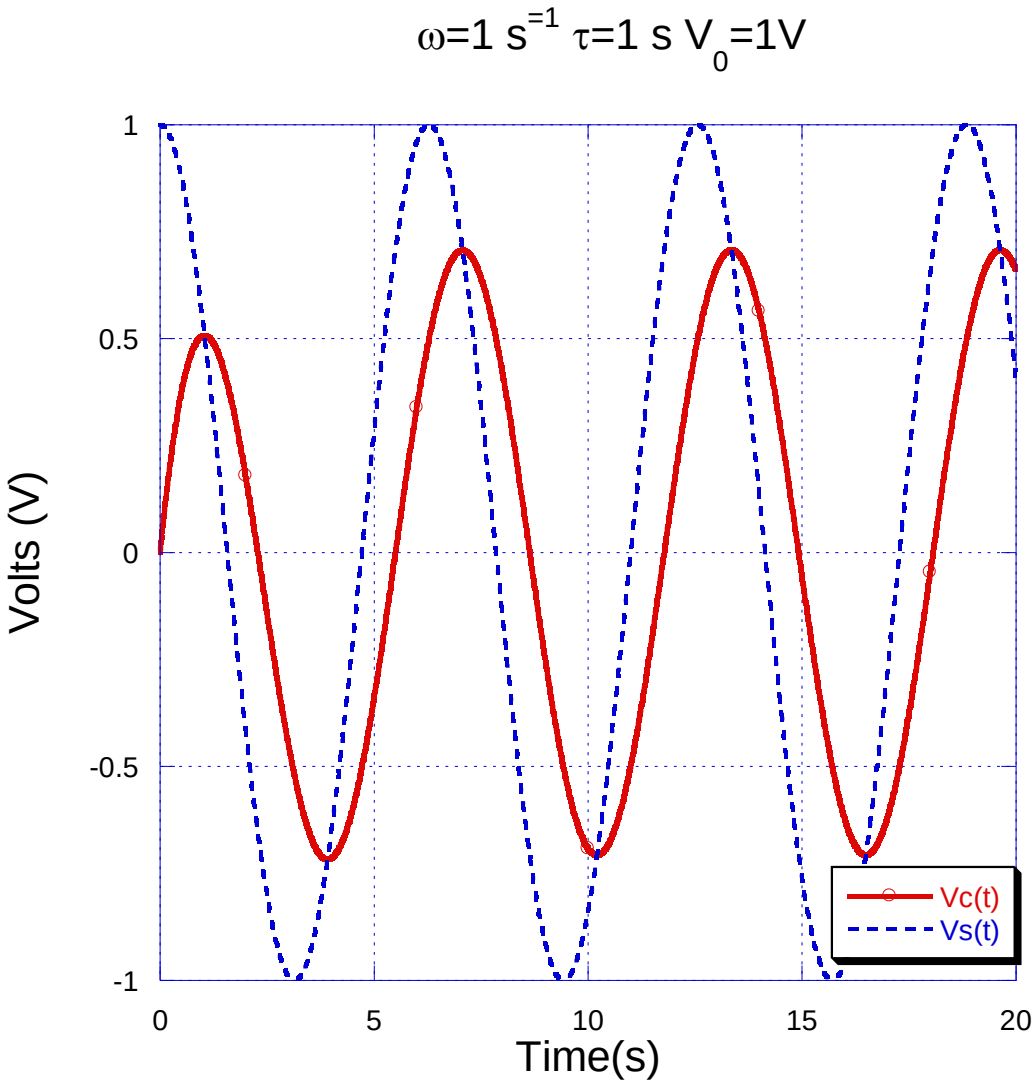

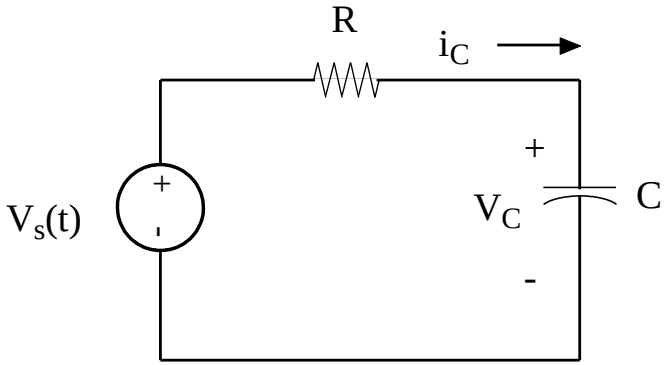

Numerical Example: Cosine Wave into RC

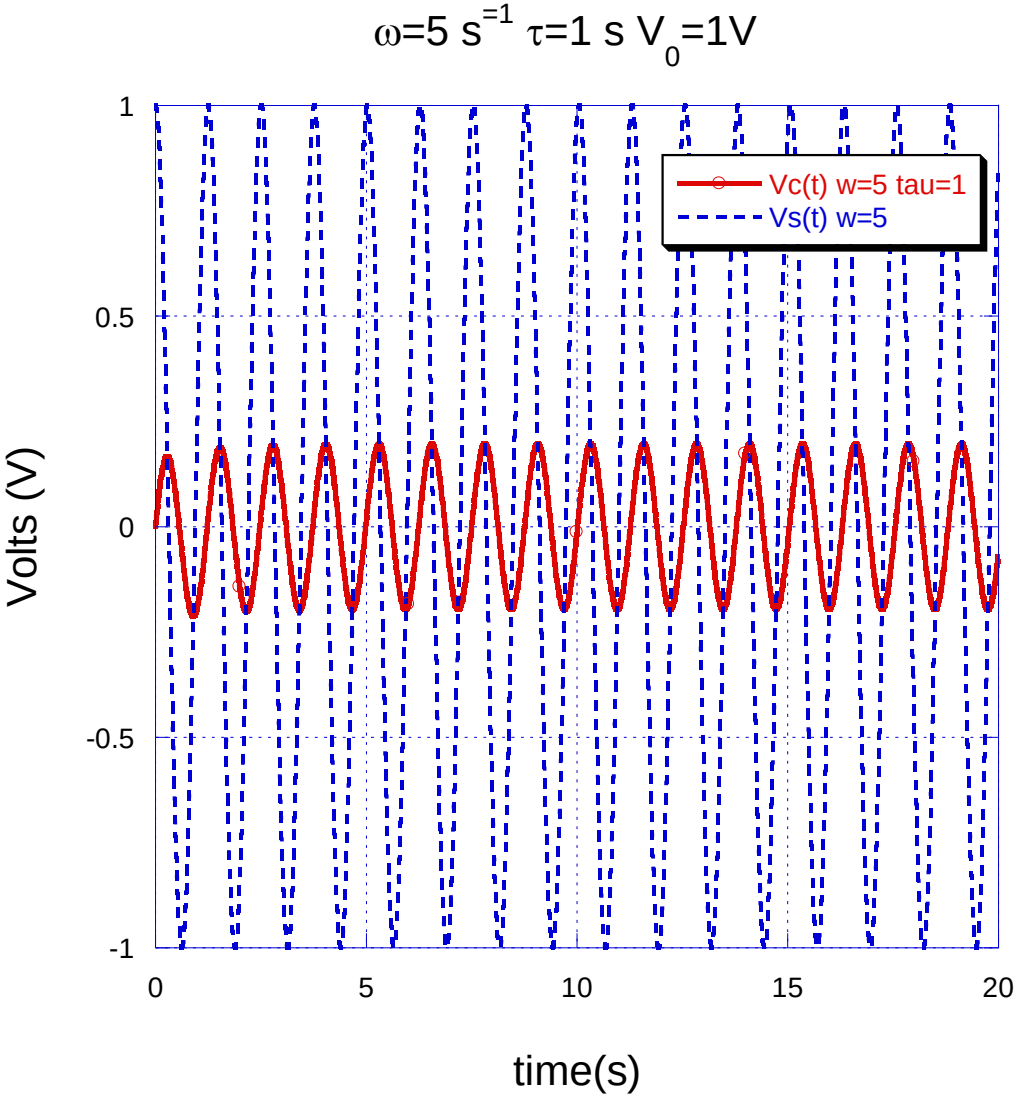

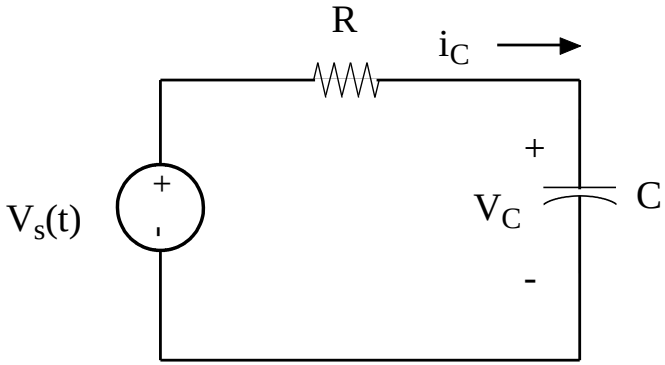

Numerical Example: Cosine Wave into RC

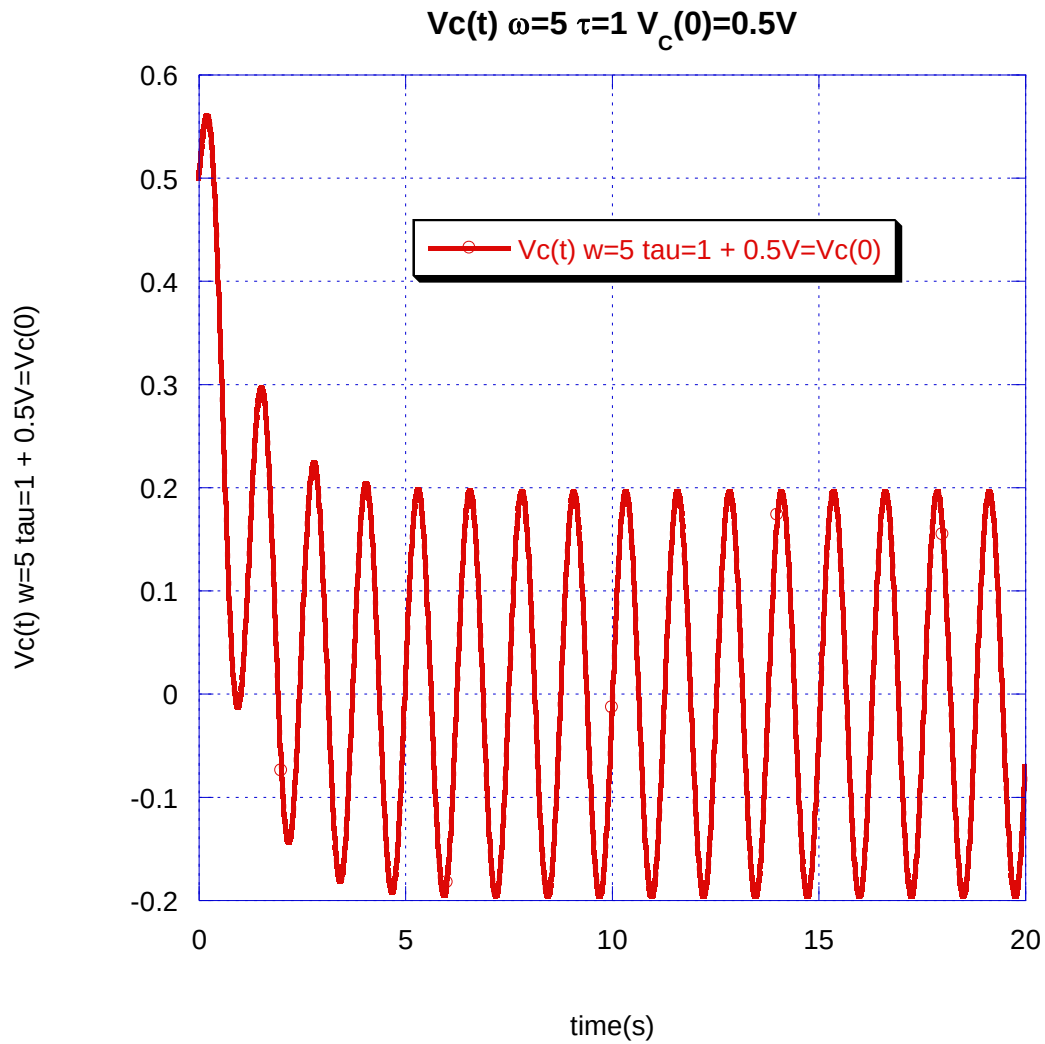

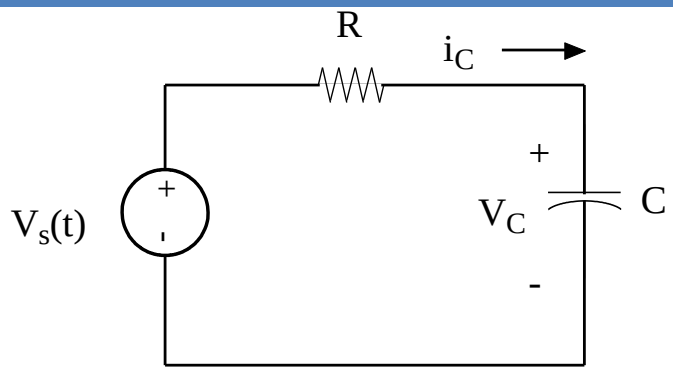

Op-Amp Example

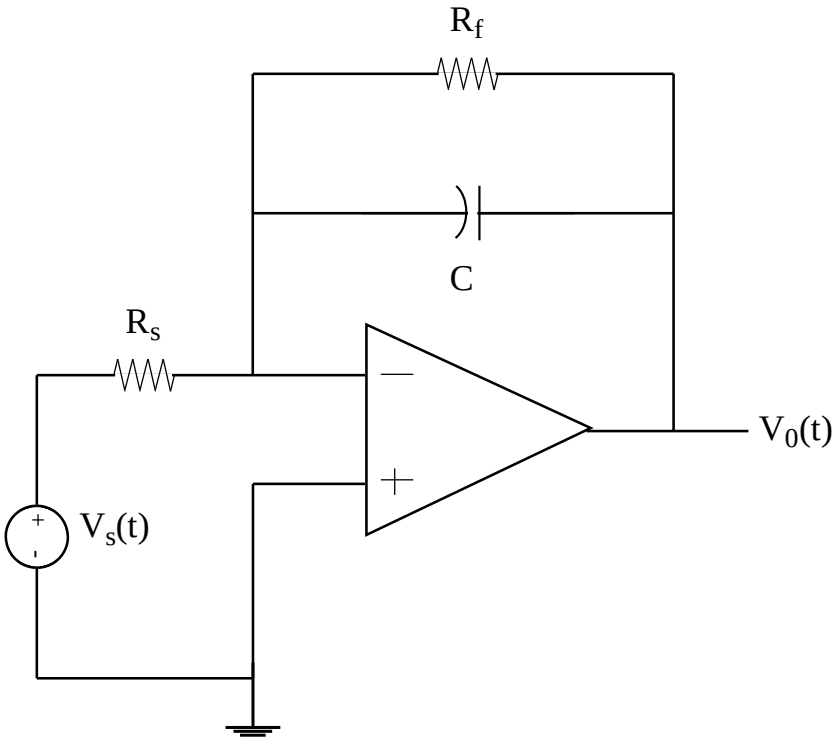
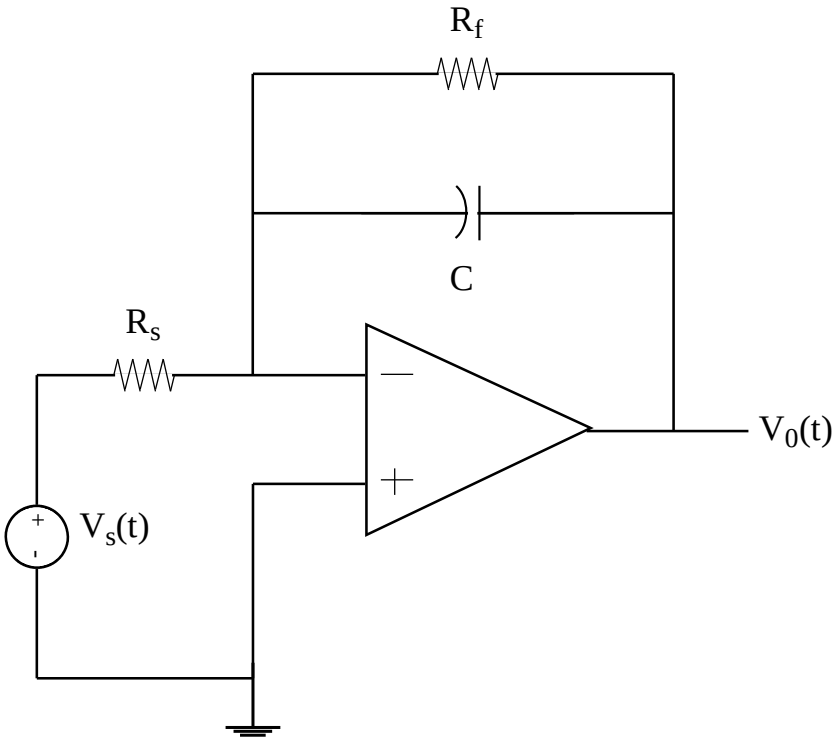
Op-Amp Example