RESISTIVE CIRCUITS

EECS 215: Intro. Circuits (F. Terry WN10)

Chapter 2 Resistive Circuits

2.1. Ohm's Law

2.2. Nodes, Branches and Loops

2.3. Kirchhoff's Laws

2.4. Series Resistors and Voltage Division

2.5. Parallel Resistors and Current Division

2.6. Wheatstone Bridge

2.7 Non-linear Devices

2.8 Intro to Multisim

Basic Laws and Concepts in Circuit Analysis

- Circuit Elements are connected at nodes to form a network
- There are *Element Constraints*
  - *The I-V relationship for each element (such as Ohm's Law)*
- And there are *Connection Constraints* for each node and loop in the network
  - *Kirchoff's Current&Voltage Laws*
- Element & Connection Constraints are mathematically independent conditions which together form a set of coupled equations which describe the allowed states of the network
- For a linear circuit network, there is only one allowed state.
- Much of our effort for the next couple of weeks will be looking at efficient ways to specify & solve the needed equations

Ohm's Law

Voltage across resistor is proportional to current

$$v = iR$$

$$R = \frac{v}{i}$$

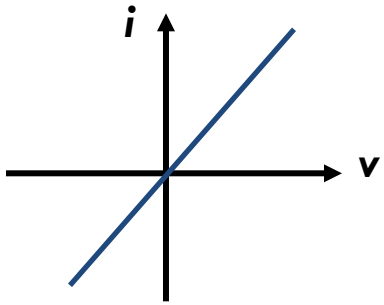

Resistance: ability to resist flow of electric current

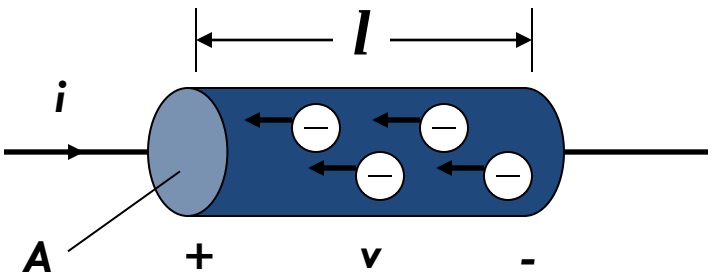

$$R = \frac{\rho l}{A} \quad \text{Standard units } \Omega$$

$$\rho = \text{Resistivity Standard units } \Omega - m$$

resistivity is a material parameter (this should become clear in 230&320)

Simple Example: Constant Cross-sectional Area

Known, uniform ρ

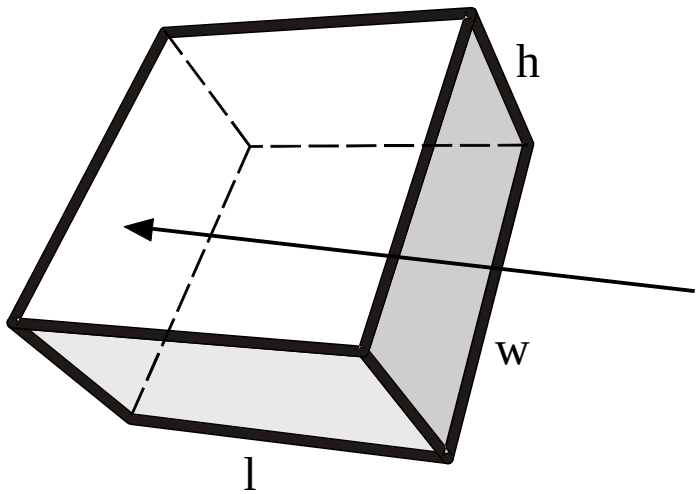

Less Easy: Non-Constant Cross Section

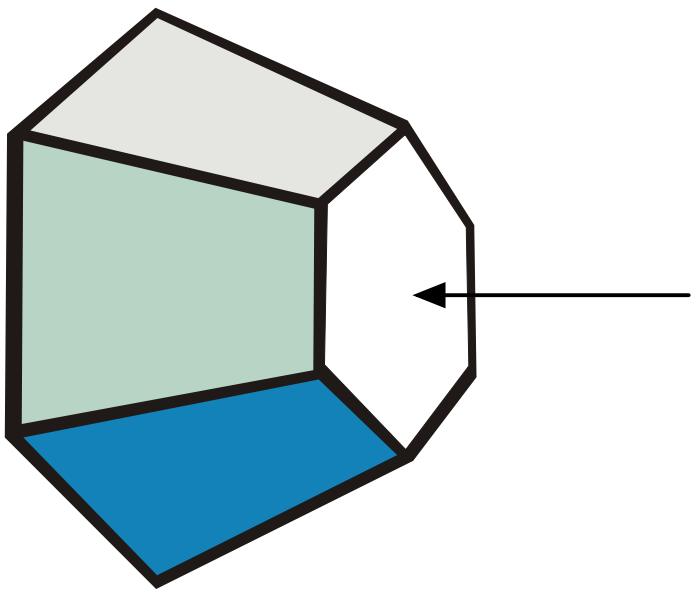

- Hexagonal Polygon with constant ρ
- Contact on Front and Back Faces
- What is R?
- We could do this one, but not a good EECS215 topic, better left to Phys 240, EECS 230, 320, etc.

Circuit Terminology

Branch: single element, such as a resistor or source

Node: connection point between two or more branches

Loop: closed path in a circuit

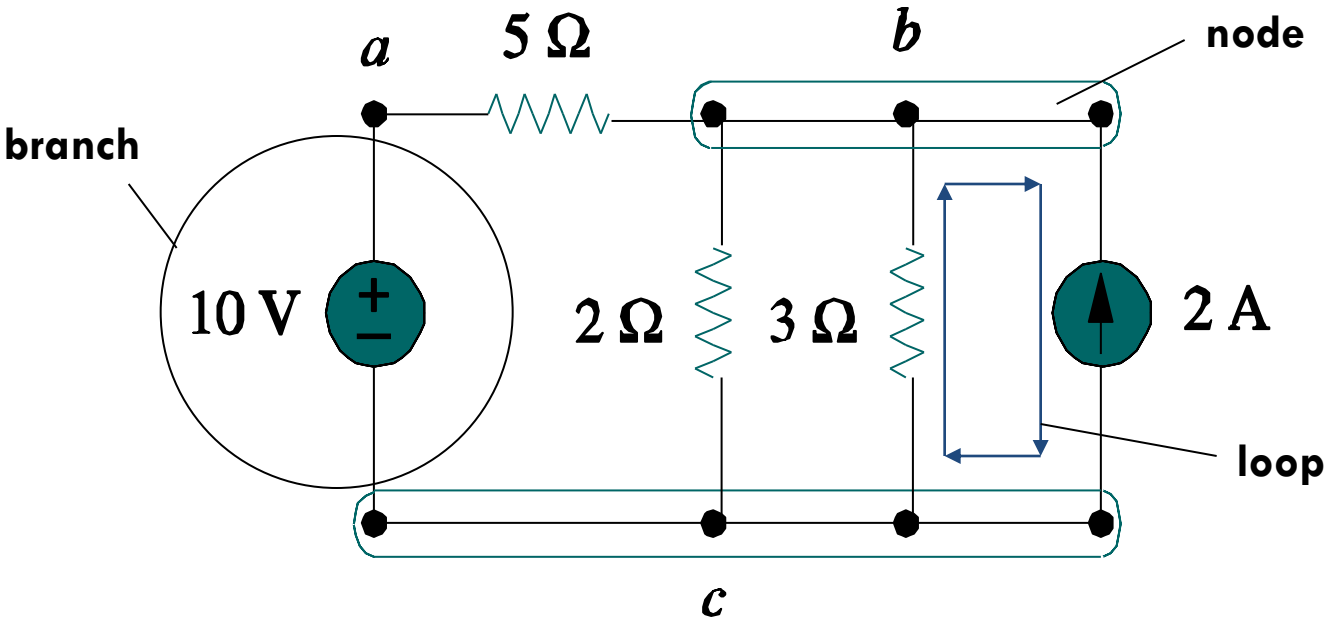

Planar Circuits

- Planar circuits: can be drawn in 2-D without branches crossing
- Whenever possible, re-draw circuit to simplify!

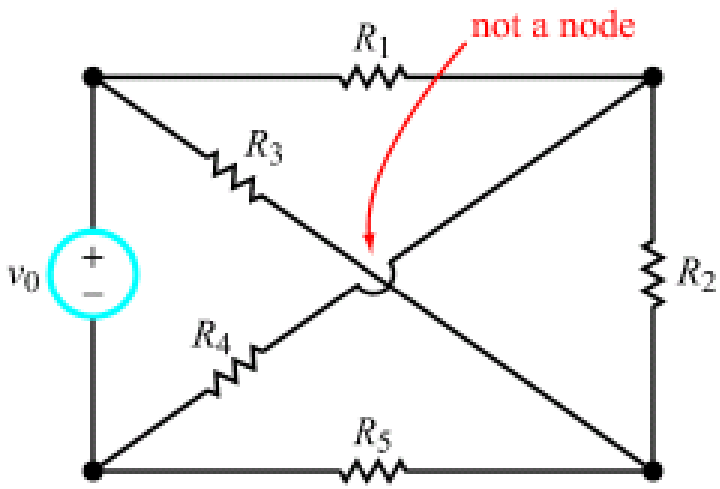

Original circuit

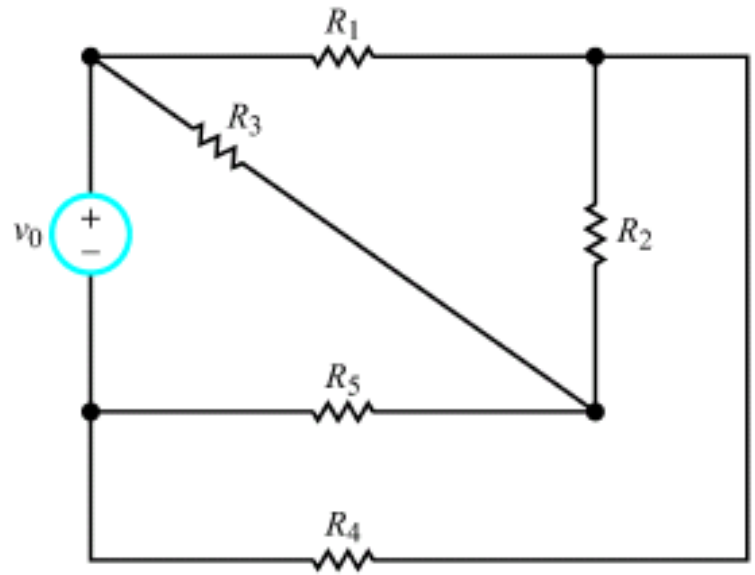

(b) Redrawn

Kirchoff's Current Law

Sum of currents entering a node is zero

Also holds for closed boundary

$$\sum_n I_n = 0$$

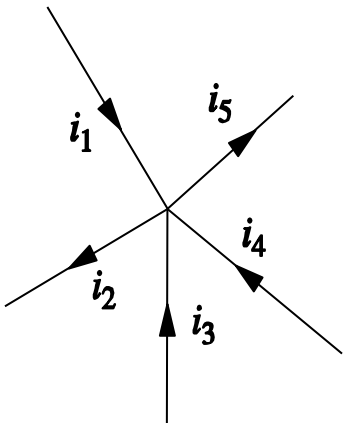

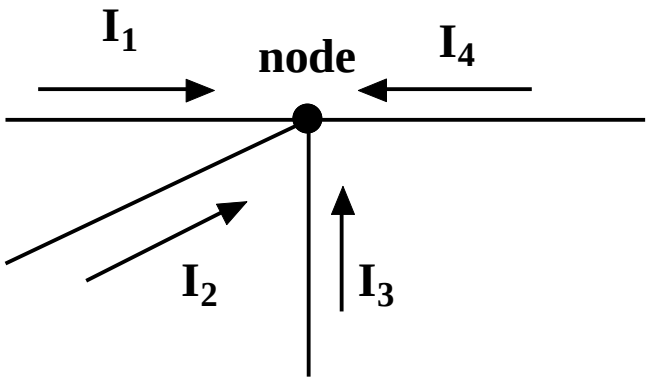

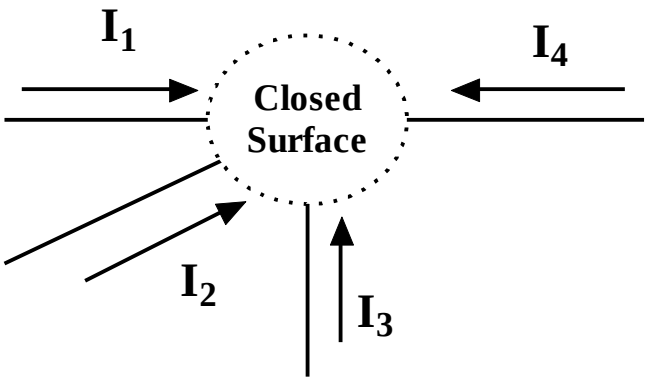

$$(I_1 + I_2 + I_3 + I_4) = 0$$

Amplifying the Closed Surface Part of KCL

$$For\ Both\ Cases:$$

$$I_1 + I_2 + I_3 = 0$$

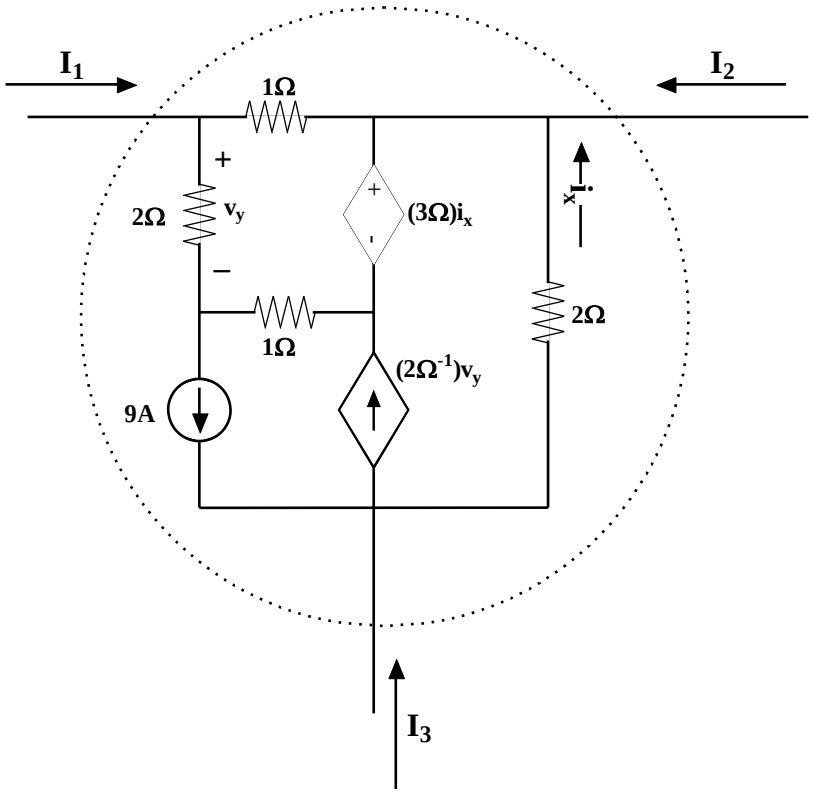

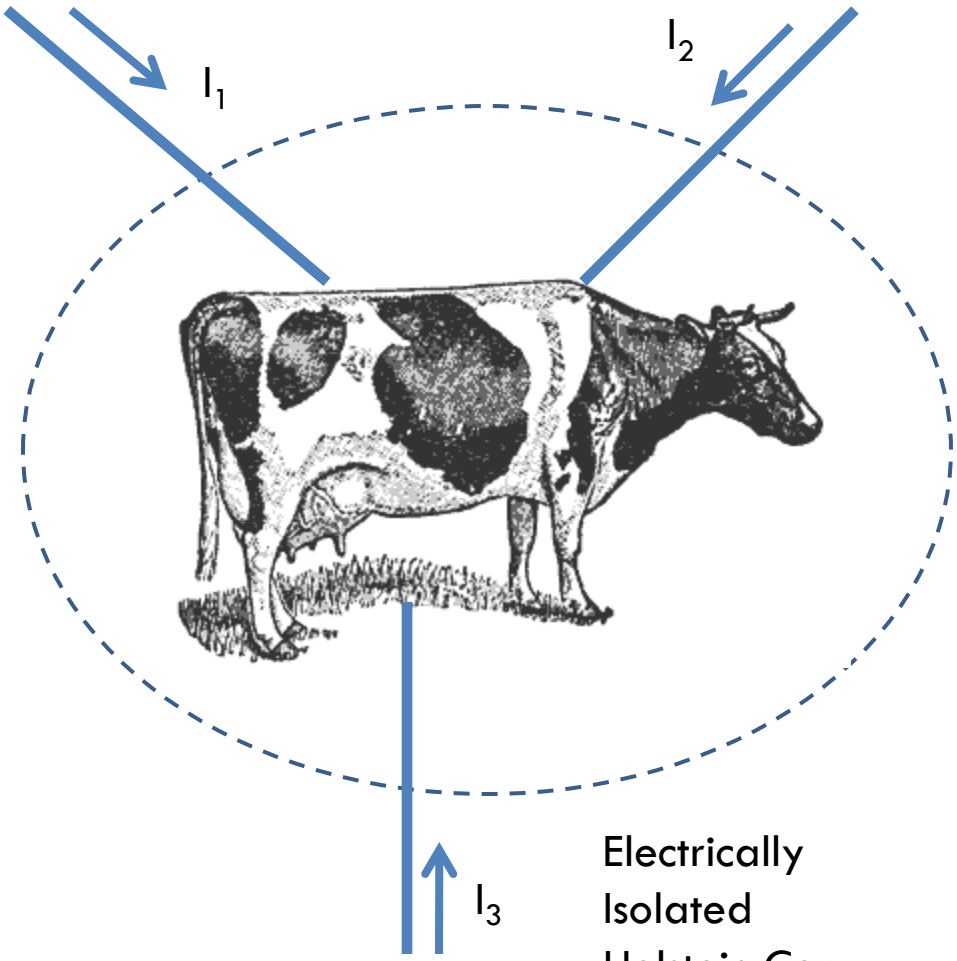

Electrically Isolated Holstein Cow

Kirchoff's Voltage Law (KVL)

Sum of voltages around a closed path is zero

Sum of voltage drops = sum of voltage rises

$$\sum_n V_n = 0$$

Define V_n's +/- in direction of loop

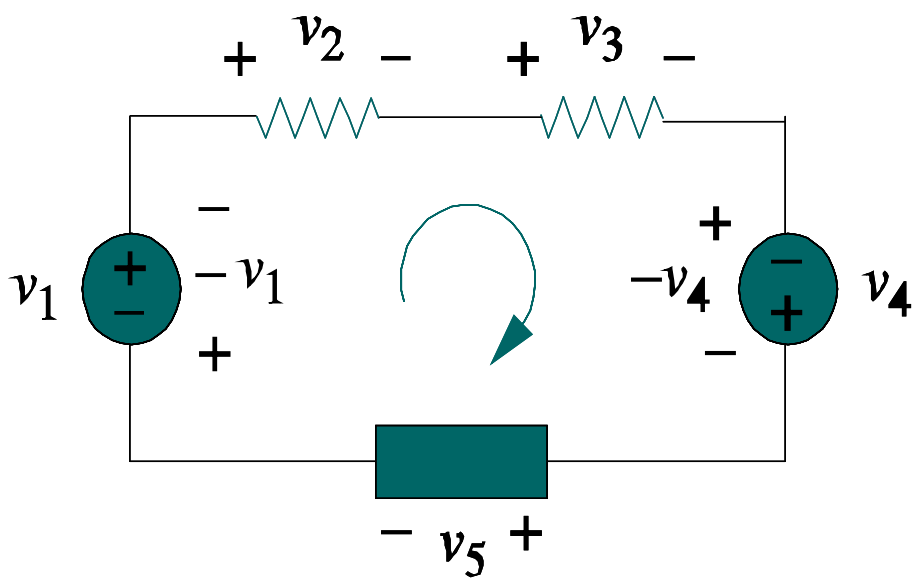

$$-v_1+v_2+v_3-v_4+v_5=0$$

$$v_2+v_3+v_5= v_1+v_4$$

KVL Example

Suppose

$$V_{ac} = +5V$$

$$V_{bc} = -2V$$

$$V_{dc} = +2V$$

Then What Are:

$$V_{ab} =$$

$$V_{ad} =$$

$$V_{bd} =$$

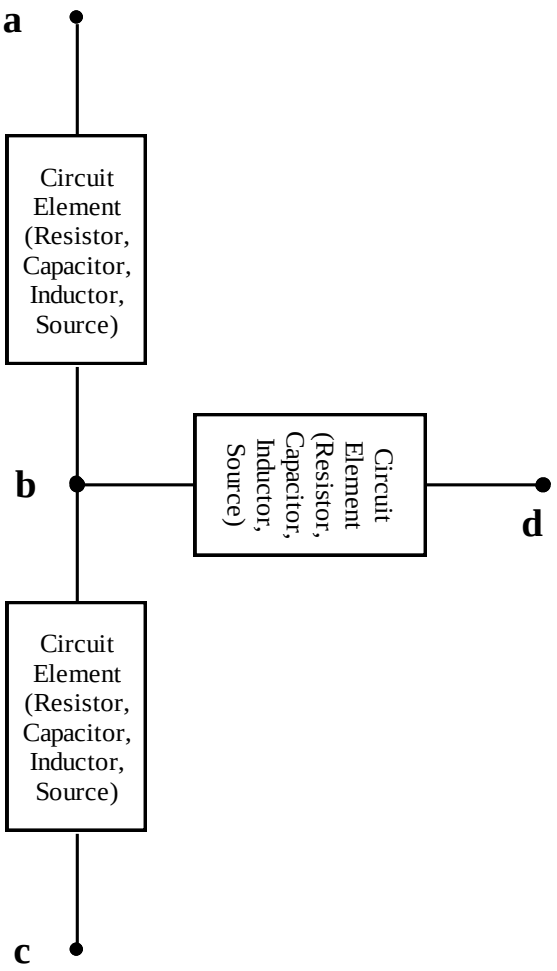

KVL Example: "by algebra"

Suppose

$V_{ac} = +5V$

$V_{bc} = -2V$

$V_{dc} = +2V$

Then What Are:

$V_{ab} =$

$V_{ad} =$

$V_{bd} =$

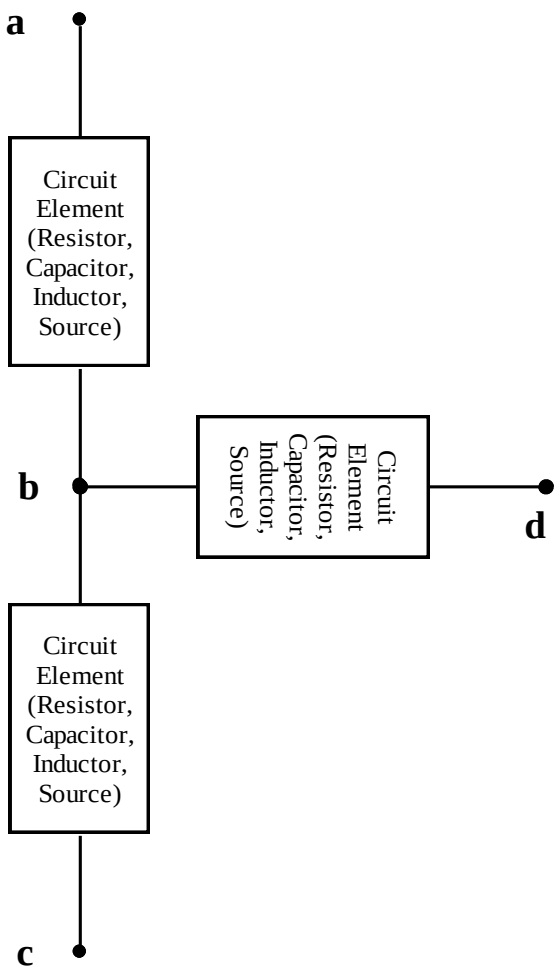

KVL Example: Loops

Suppose

$$V_{ac} = +5V$$

$$V_{bc} = -2V$$

$$V_{dc} = +2V$$

$$-V_{ac} + V_{ab} + V_{bc} = 0$$

$$\rightarrow V_{ab} = 5 - (-2) = +7V$$

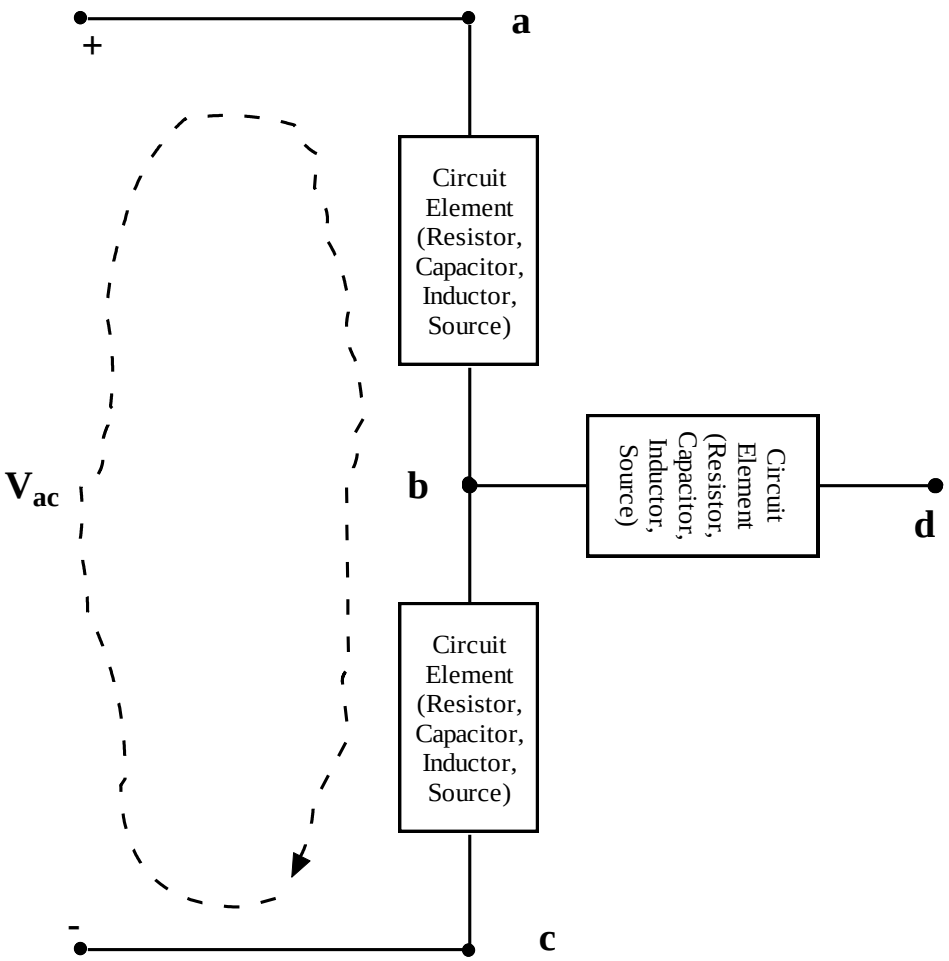

KVL Example

Suppose

$$V_{ac} = +5V$$

$$V_{bc} = -2V$$

$$V_{dc} = +2V$$

$$-V_{dc} - V_{ad} + V_{ac} = 0$$

$$\rightarrow V_{ad} = -V_{dc} + V_{ac}$$

$$V_{ad} = -2 + 5 = 3V$$

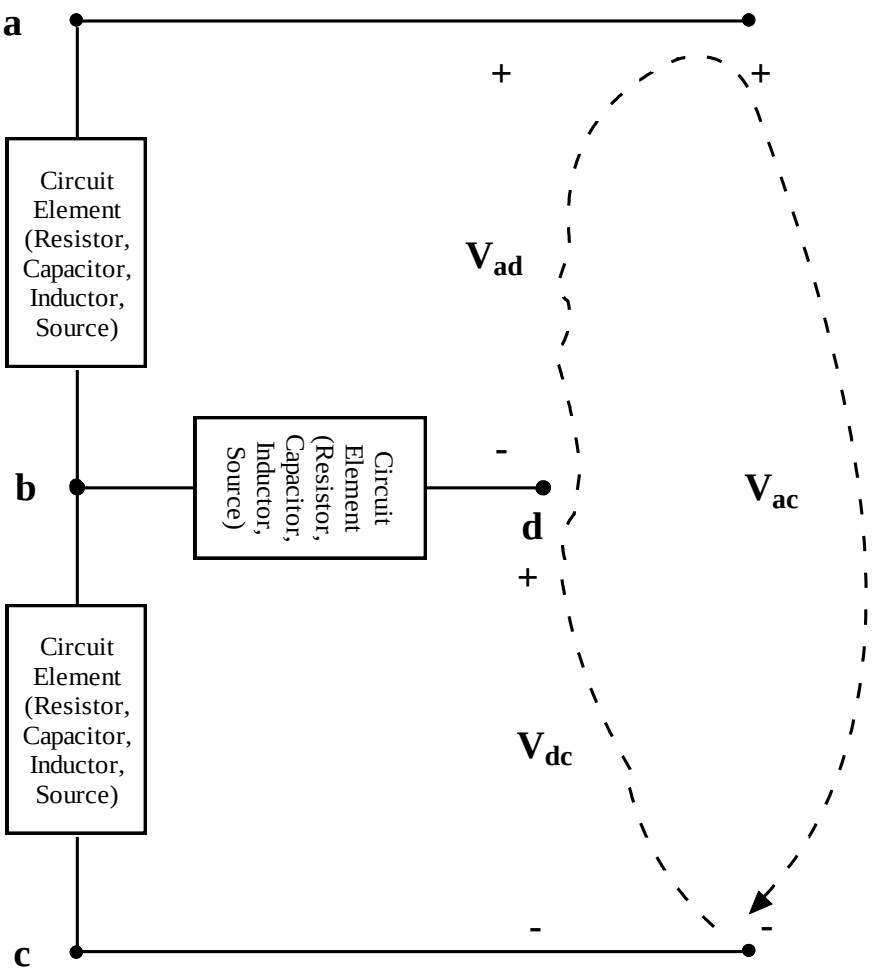

Fully Solved Circuit Example

Check KVL and KCL consistency of this solution. 4 KVL loops are suggested but you can do others.

How many nodes are there?

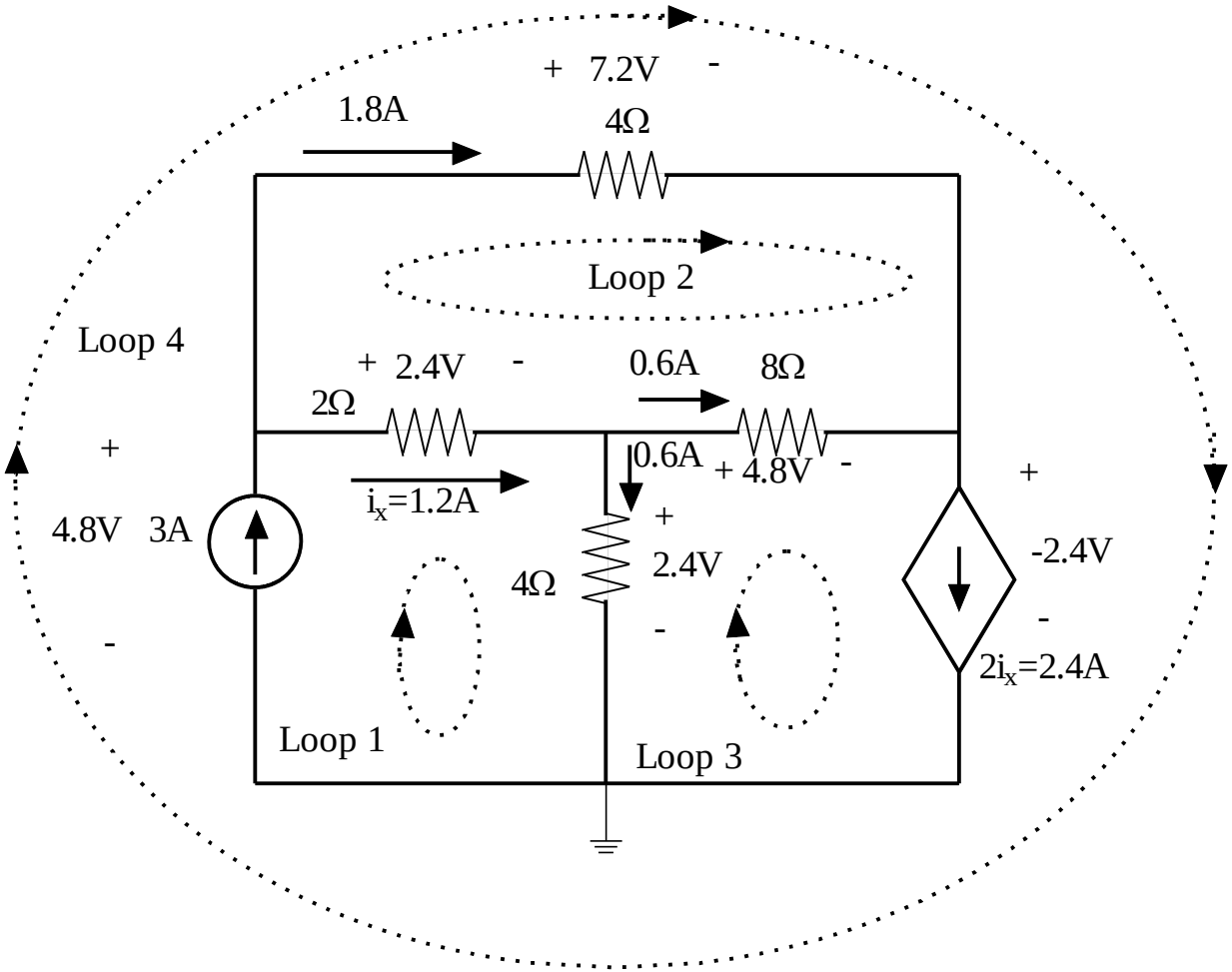

Fully Solved Circuit Example

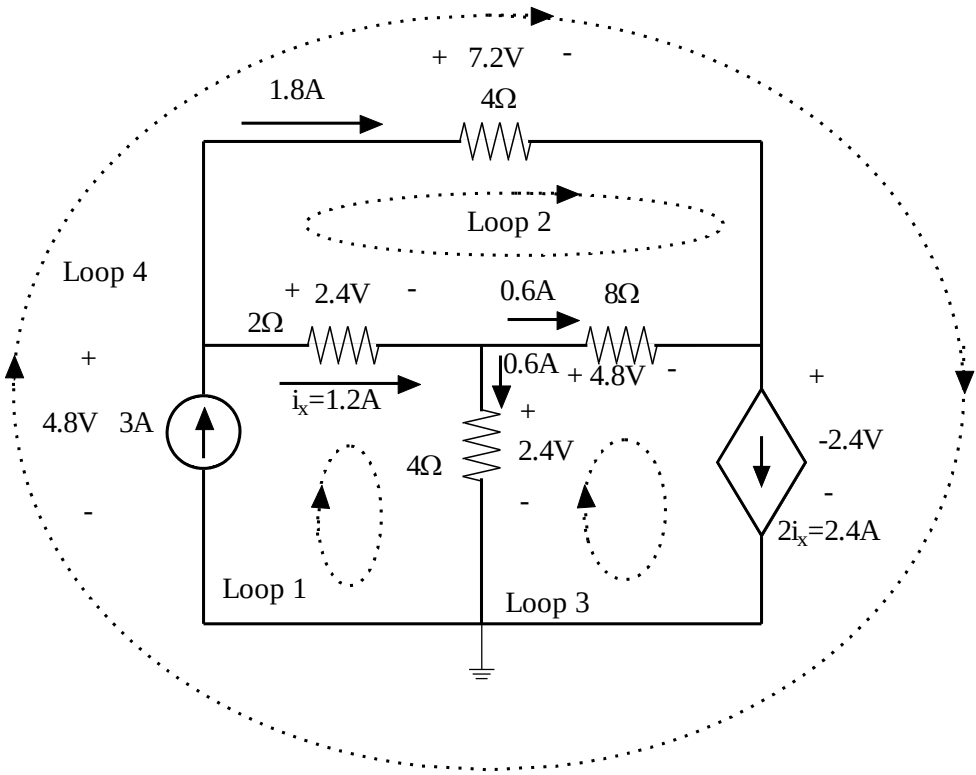

Equivalent Circuits

- If the current and voltage characteristics at nodes are identical, the circuit is considered "equivalent"
- Identifying equivalent circuits simplifies analysis

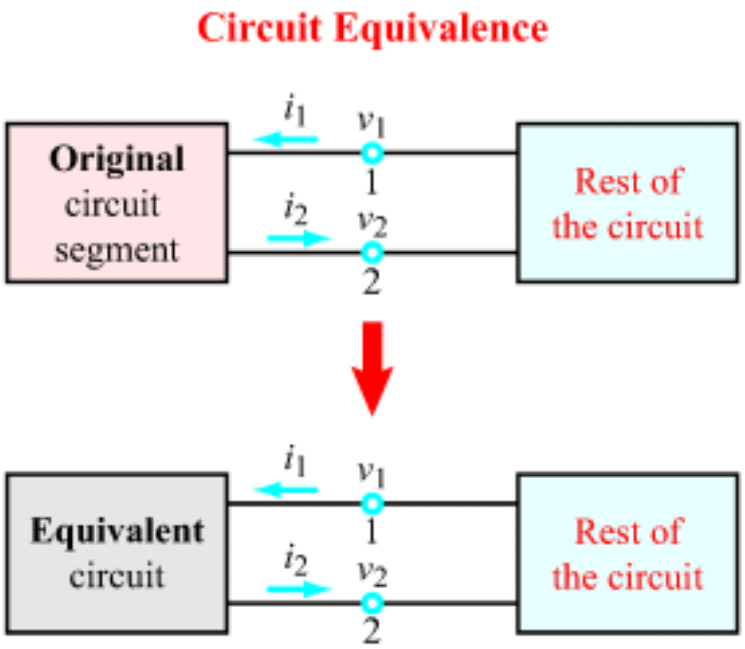

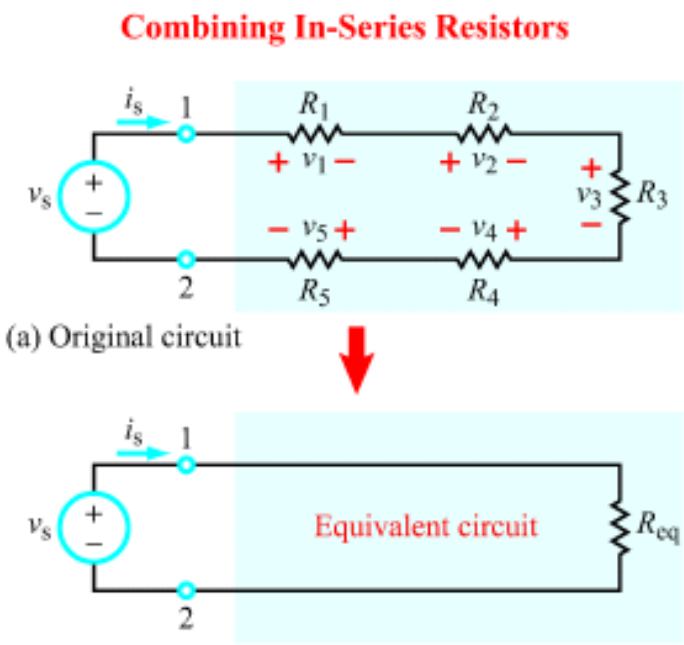

Resistors in Series

Equivalent resistance (series) is sum of resistances

$$R_{eq} = \sum R_n = R_1 + R_2 + \ldots + R_N$$

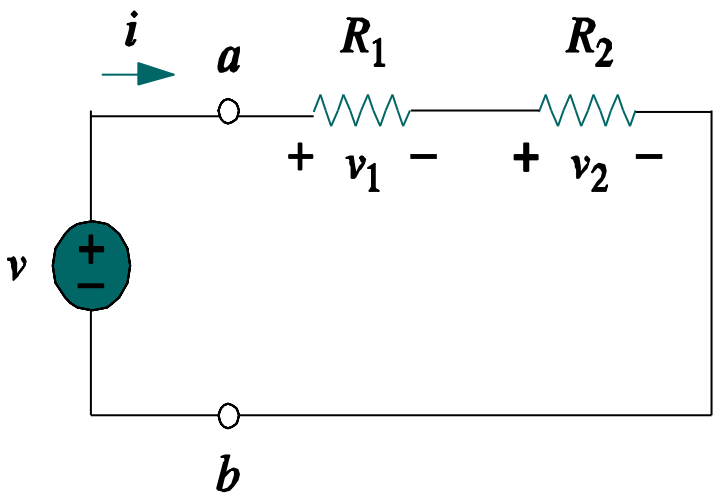

$$R_{eq} = R_1 + R_2$$

$$v_1 = \frac{R_1}{R_1 + R_2} v \qquad v_2 = \frac{R_2}{R_1 + R_2} v$$

Voltage divided over resistors (voltage divider)

$$v_n = \frac{R_n}{R_{eq}} v$$

How could you "measure" R_{eq}?

Resistors in series – relations from KVL, KCL

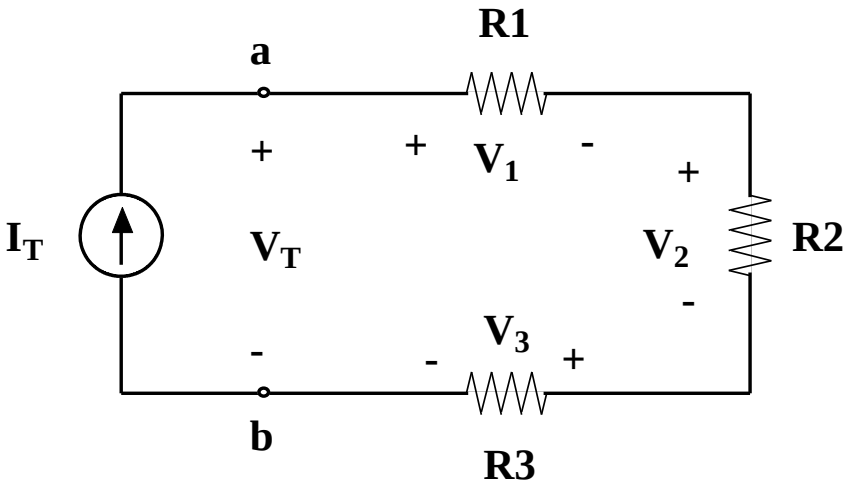

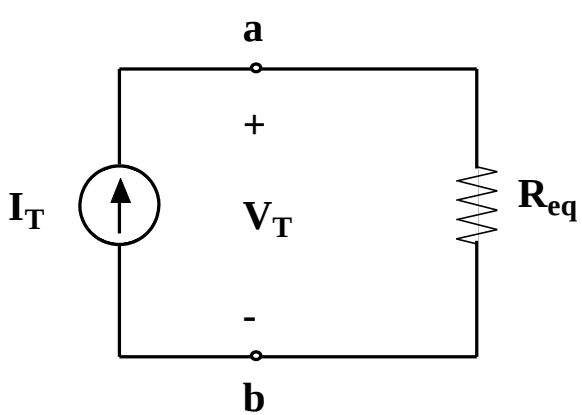

- We want the I-V properties to be the same, so I'll apply at test current and measure a test voltage
- KVL: $V_T=V_1+V_2+V_3$
- KCL&Ohm's Law
  - $V_1=R_1I_T$
  - $V_2=R_2I_T$
  - $V_3=R_3I_T$
- $V_T=(R_1+R_2+R_3)I_T$
- $R_{eq}=V_T/I_T=(R_1+R_2+R_3)$

Resistors in Parallel

R_{eq} (parallel) is inverted sum of resistances

$$\frac{1}{R_{eq}} = \sum \frac{1}{R_n} = \frac{1}{R_1} + \frac{1}{R_2} + \ldots + \frac{1}{R_N}$$

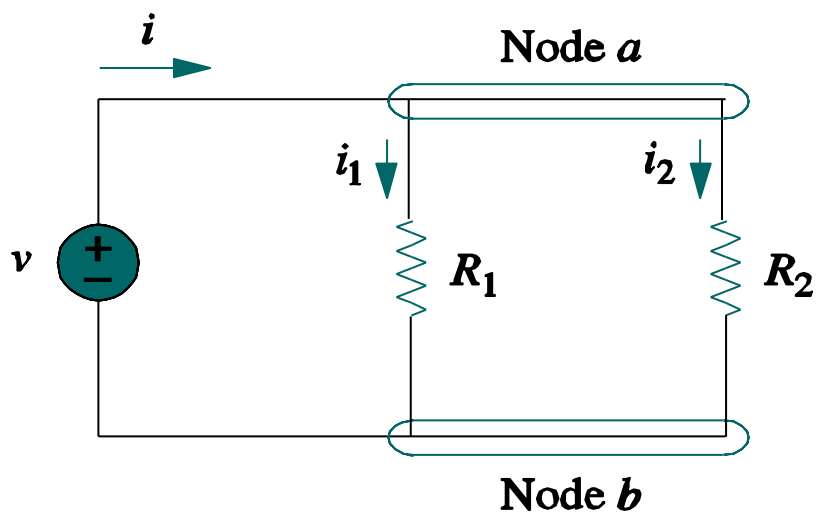

$$R_{eq} = \frac{1}{\frac{1}{R_1} + \frac{1}{R_2}} = \frac{R_1 R_2}{R_1 + R_2}$$

$$i = i_1 + i_2 \qquad i_1 = \frac{v}{R_1} \qquad i_2 = \frac{v}{R_2}$$

Current divided over resistors (current divider)

$$i_n = \frac{v}{R_n} = i\frac{R_{eq}}{R_n}$$

Multi-Step Reduction with Series-Parallel Rules

- Replace the "Ugly" Network with One Equivalent Resistor (A&S Example 2.9)

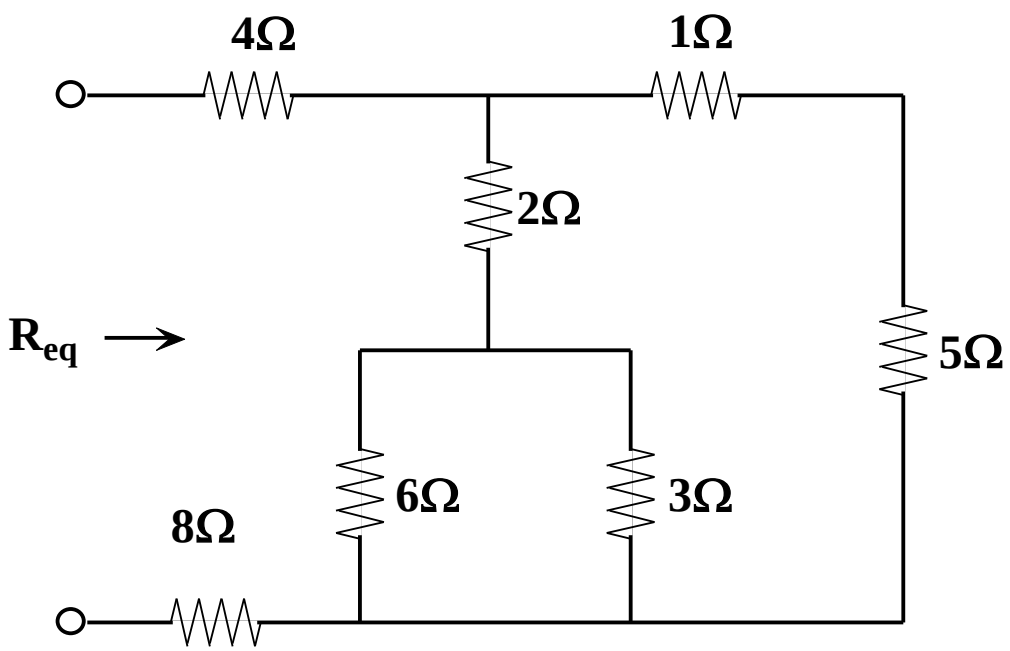

Muti-Step Reduction

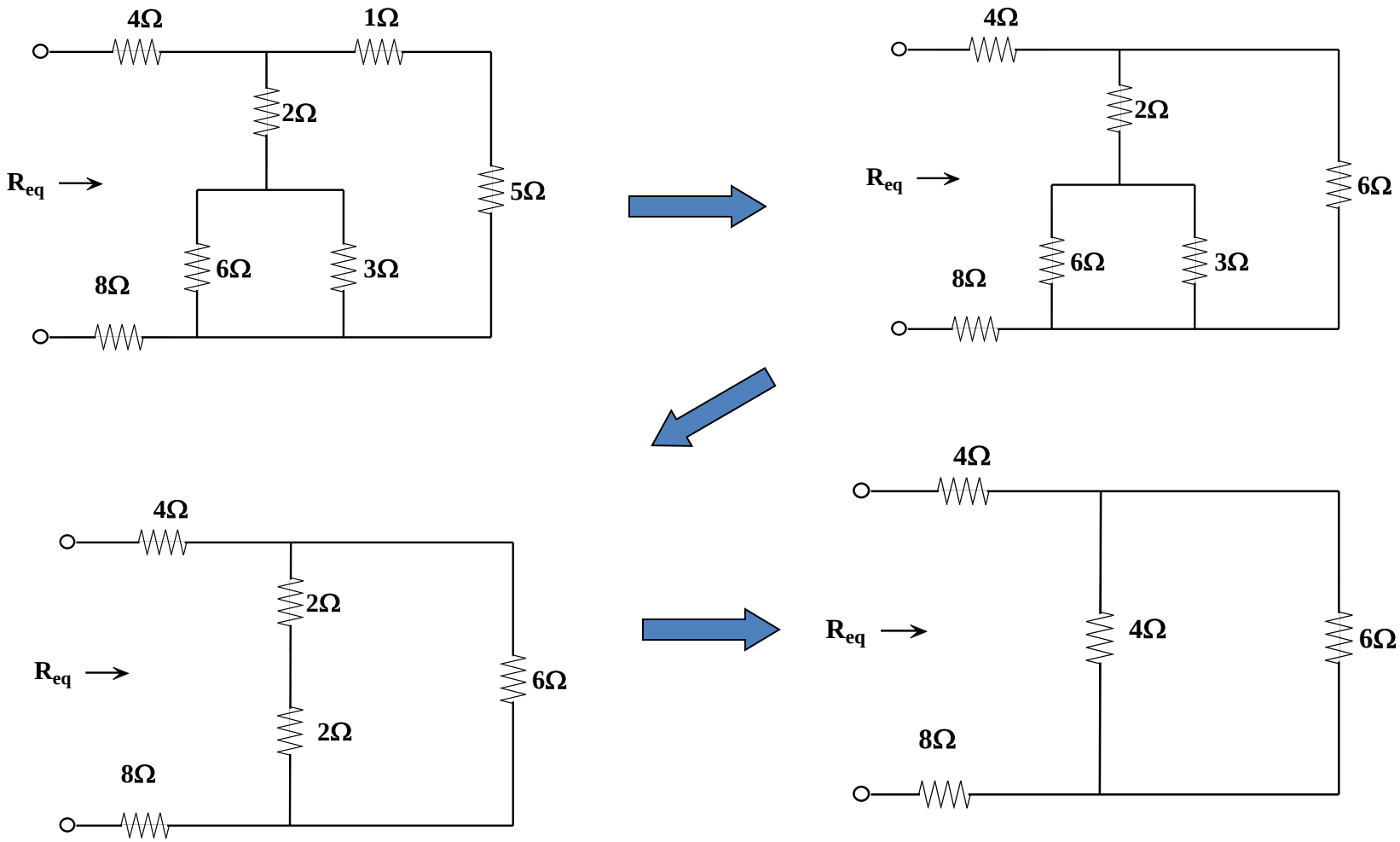

Multi-step Reduction

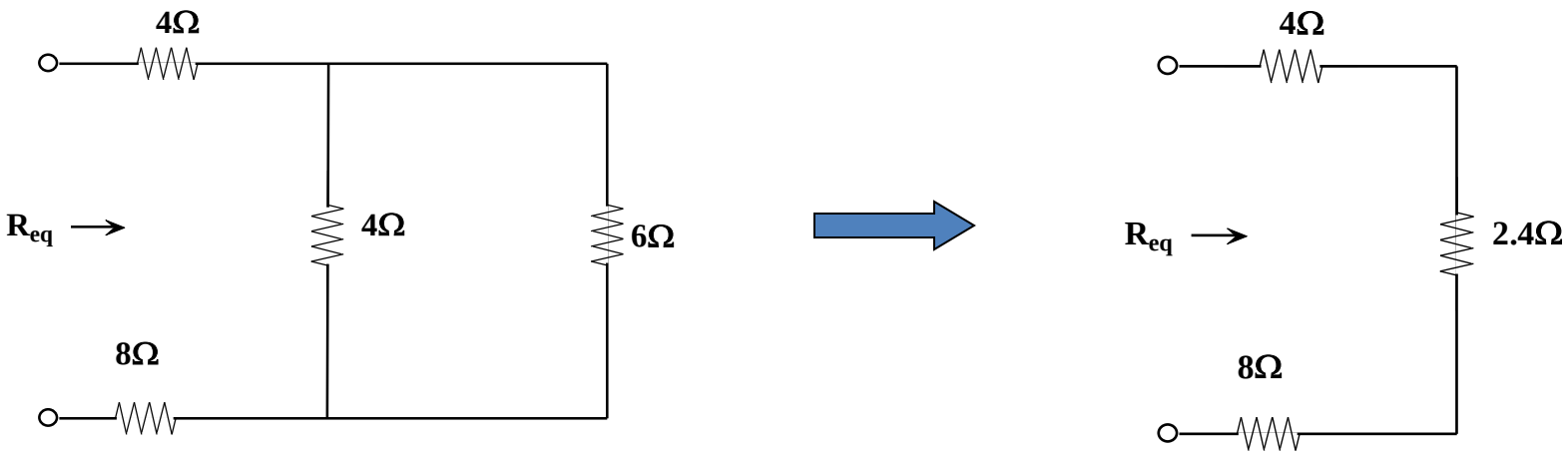

Now it's an easy series combination and

Req=4+2.4+8=14.4Ω

Source Transformation

- Can transform voltage source to current source, representing equivalent circuits
- Can simplify circuit analysis

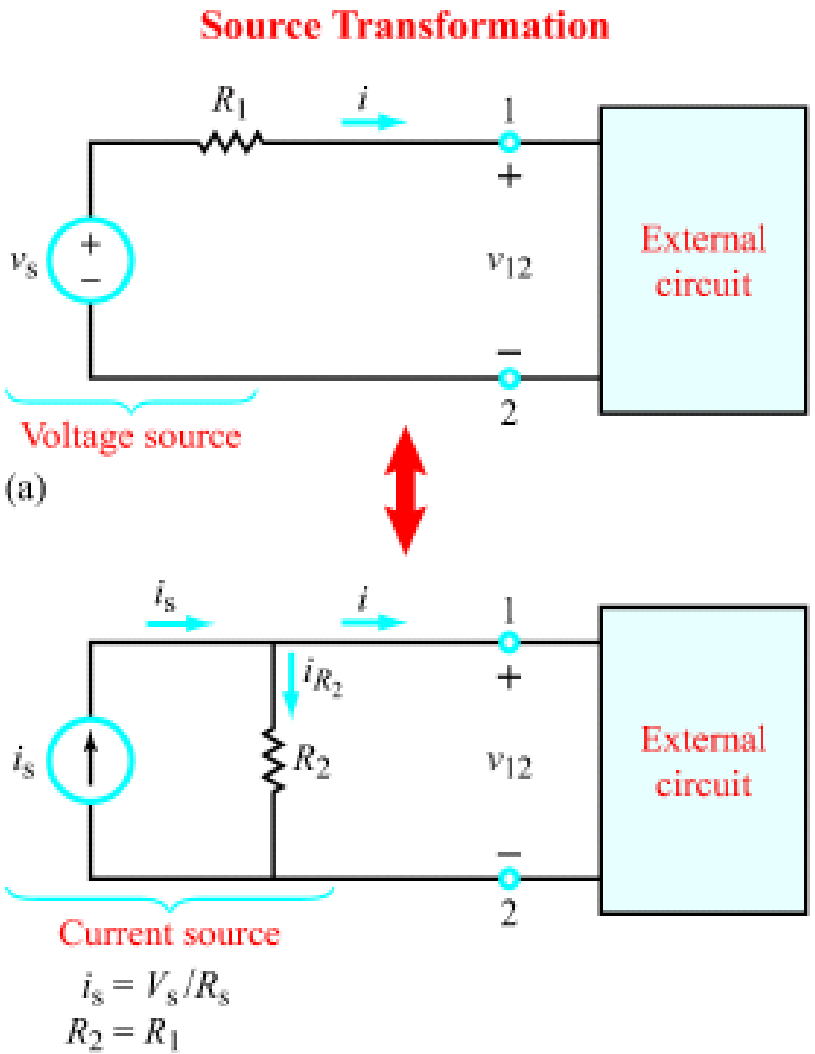

Source Transformations

- Viewed from the output terminals a&b, the two circuits below are *equivalent*
- Replacement of a circuit by an equivalent can make some problems easier to solve

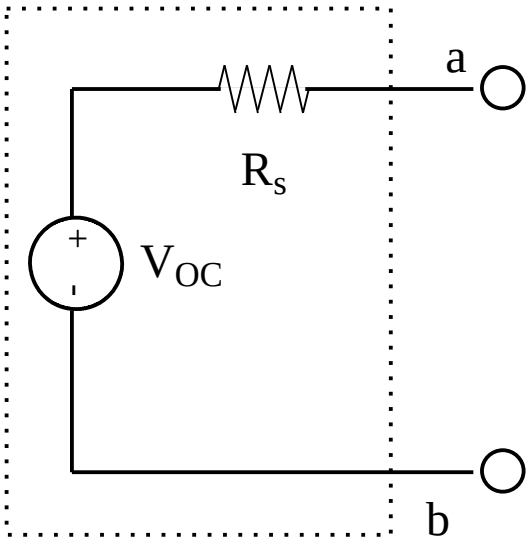

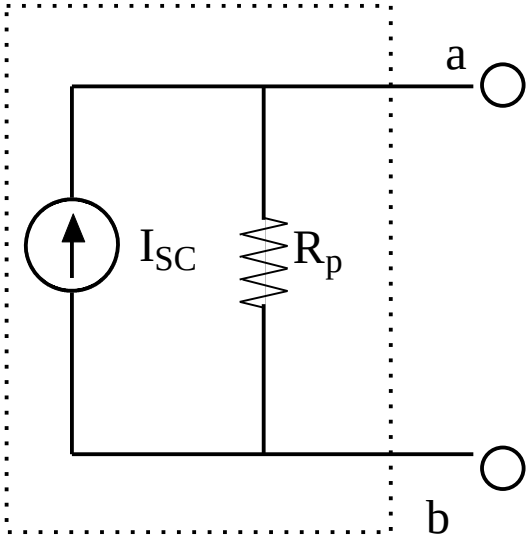

$$R_S = R_P$$

$$V_{OC} = R_P I_{SC}$$

$$I_{SC} = V_{OC} / R_S$$

Practice Problem by Source Transformation

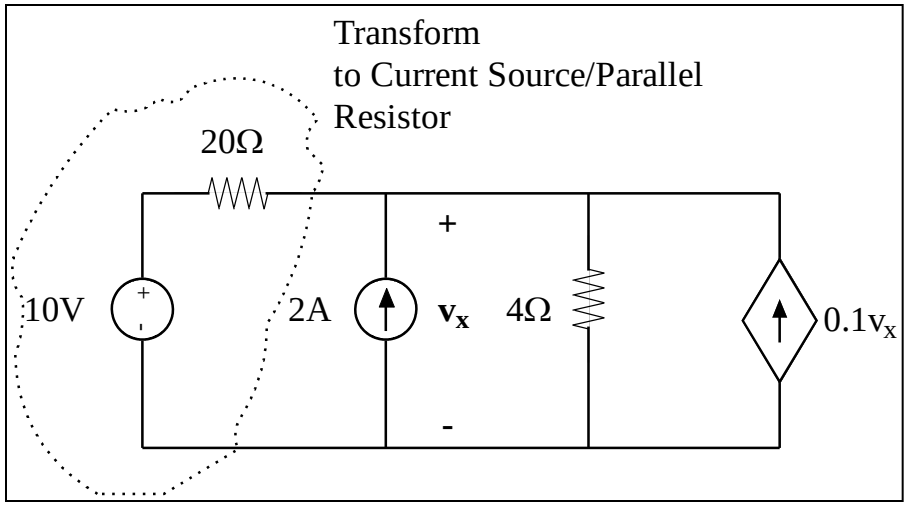

Practice Problem by Source Transformation

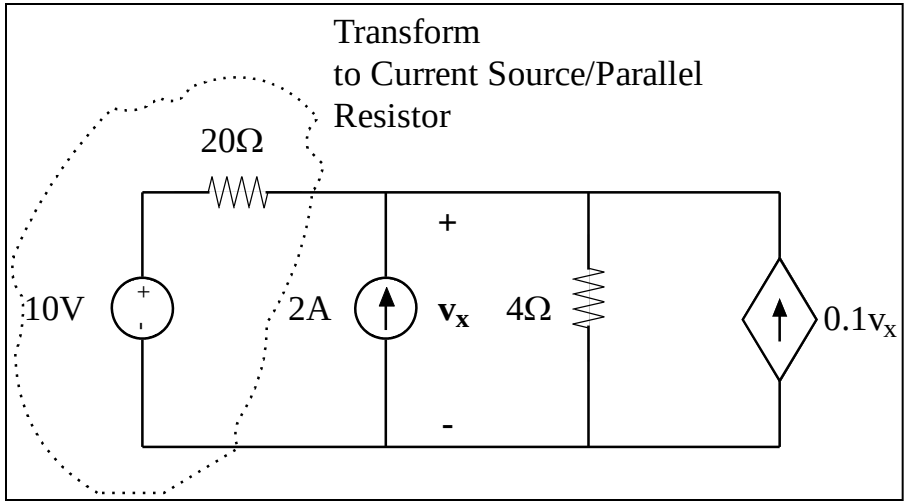

Practice Problem by Source Transformation

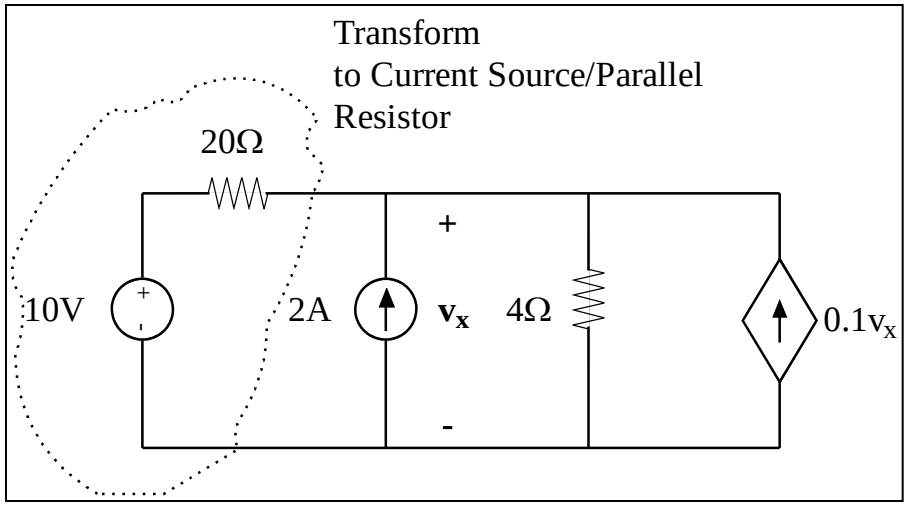

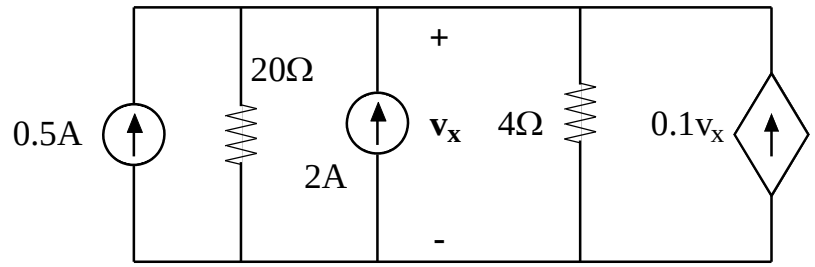

Last trick

$0.1v_x$ source= -10Ω Resistor

Combine Parallel Elements

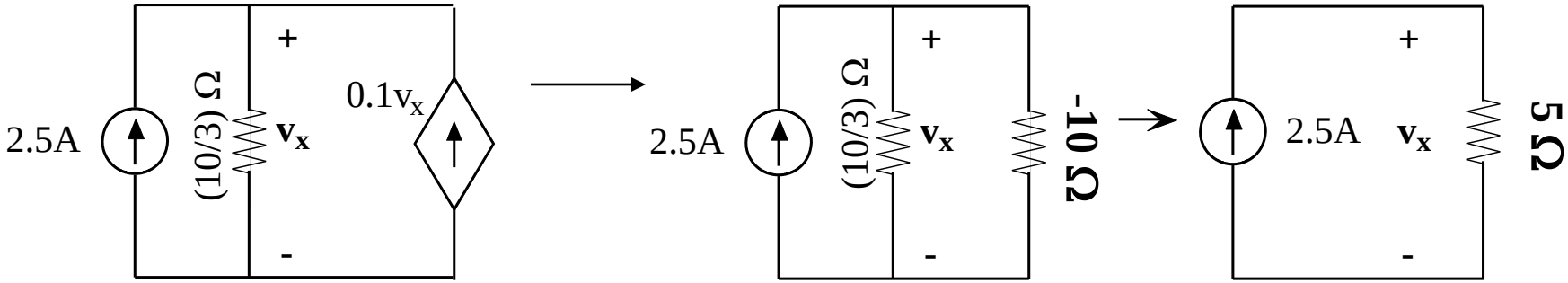

V_x=+12.5V

Wheatstone Bridge

- Measurement instrument based on differential measurement
- Determine unknown resistance based on "balanced" condition
- Highly sensitive electrical measurement instrument

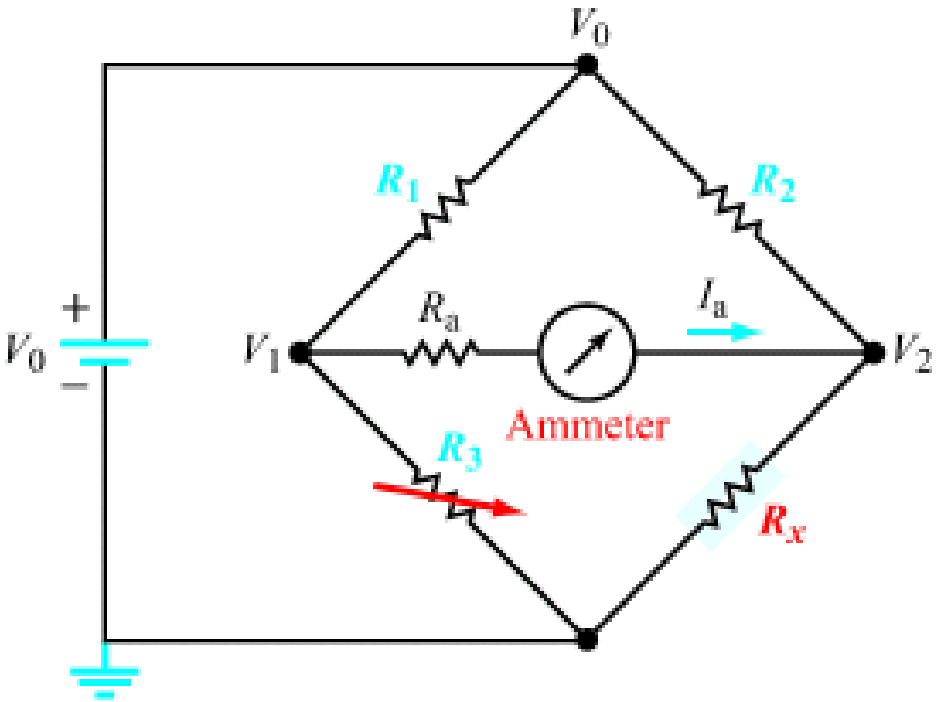

$$R_x = \left(\frac{R_2}{R_1}\right) R_3$$

For balanced condition