AC ANALYSIS 3

EECS 215: Fred Terry, Adapted From J. Phillips Material

Sinusoidal Signals

$$v(t) = V_m \cos(\omega t + \phi)$$

$$\omega = 2\pi f$$

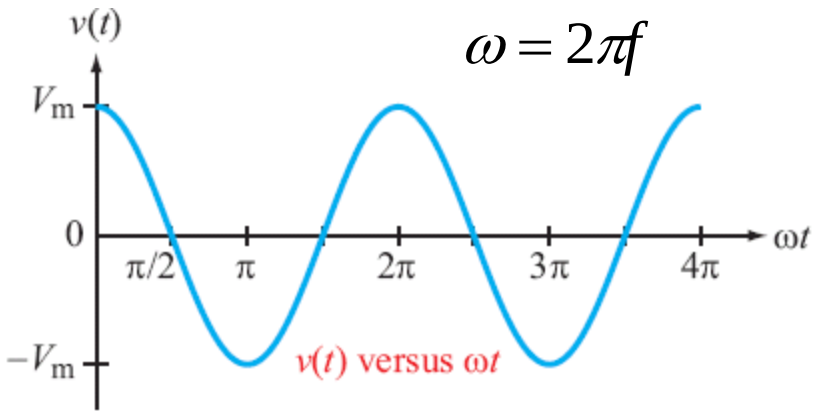

$$T = \frac{1}{f}$$

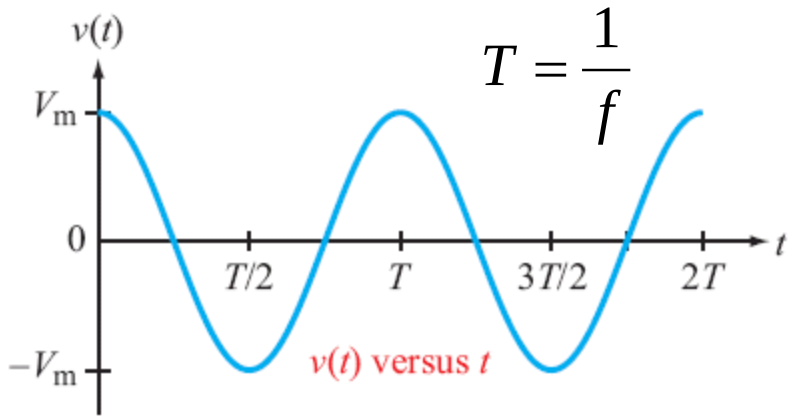

Useful relations: All Straightforward to Derive from Euler's relation

$$\sin x = \pm\cos(x \mp 90°)$$
$$\cos x = \pm\sin(x \pm 90°)$$
$$\sin x = -\sin(x \pm 180°)$$
$$\cos x = -\cos(x \pm 180°)$$
$$\sin(-x) = -\sin x$$
$$\cos(-x) = \cos x$$

$$\sin(x \pm y) = \sin x \cos y \pm \cos x \sin y$$
$$\cos(x \pm y) = \cos x \cos y \mp \sin x \sin y$$

$$2\sin x \sin y = \cos(x - y) - \cos(x + y)$$
$$2\sin x \cos y = \sin(x + y) + \sin(x - y)$$
$$2\cos x \cos y = \cos(x + y) + \cos(x - y)$$

Example: sin(x)sin(y)

$$\sin(x)\sin(y) = \left(\frac{e^{jx} - e^{-jx}}{2j}\right)\left(\frac{e^{jy} - e^{-jy}}{2j}\right)$$

$$= -\frac{1}{4}\left[e^{j(x+y)} - e^{j(x-y)} - e^{j(y-x)} + e^{-j(x+y)}\right]$$

$$= -\frac{1}{4}\left[\left(e^{j(x+y)} + e^{-j(x+y)}\right) - \left(e^{j(x-y)} + e^{j(y-x)}\right)\right]$$

$$= -\frac{1}{4}\left[2\cos(x+y) - 2\cos(x-y)\right]$$

$$= \frac{1}{2}\left[\cos(x-y) - \cos(x+y)\right]$$

Complex Numbers

We will find it is useful to alternatively represent sinusoids as a complex numbers

$$j = \sqrt{-1}$$

$$z = x + jy$$ **Rectangular coordinates**

$$z = |z|\angle\theta = |z|e^{j\theta}$$ **Polar coordinates**

$$\mathrm{Re}(z) = x$$

$$\mathrm{Im}(z) = y$$

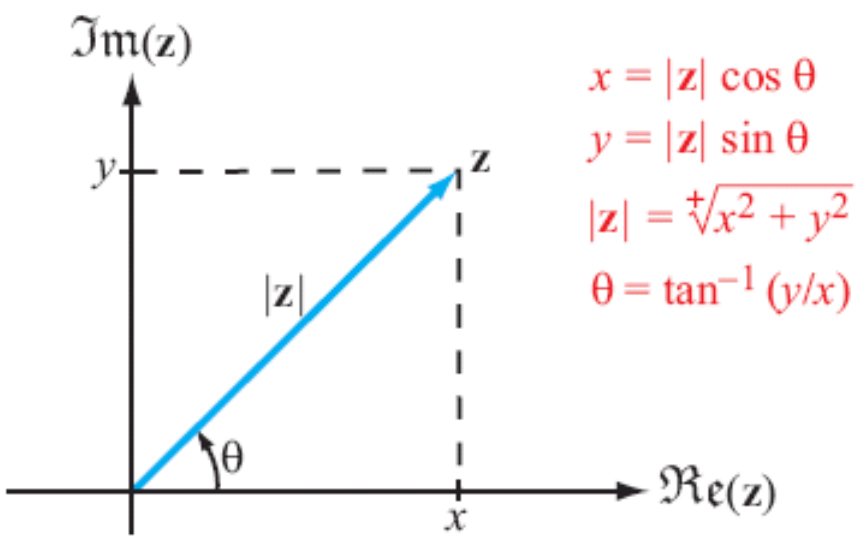

Relations based on Euler Identity

$$e^{\pm j\theta} = \cos\theta \pm j\sin\theta$$

Relations for Complex Numbers

Euler's Identity: $e^{j\theta} = \cos\theta + j\sin\theta$

$\sin\theta = \dfrac{e^{j\theta} - e^{-j\theta}}{2j}$	$\cos\theta = \dfrac{e^{j\theta} + e^{-j\theta}}{2}$
$\mathbf{z} = x + jy = \lvert\mathbf{z}\rvert e^{j\theta}$	$\mathbf{z}^* = x - jy = \lvert\mathbf{z}\rvert e^{-j\theta}$
$x = \Re\mathfrak{e}(\mathbf{z}) = \lvert\mathbf{z}\rvert\cos\theta$	$\lvert\mathbf{z}\rvert = \sqrt[+]{\mathbf{z}\mathbf{z}^*} = \sqrt[+]{x^2 + y^2}$
$y = \Im\mathfrak{m}(\mathbf{z}) = \lvert\mathbf{z}\rvert\sin\theta$	$\theta = \tan^{-1}(y/x)$
$\mathbf{z}^n = \lvert\mathbf{z}\rvert^n e^{jn\theta}$	$\mathbf{z}^{1/2} = \pm\lvert\mathbf{z}\rvert^{1/2} e^{j\theta/2}$
$\mathbf{z}_1 = x_1 + jy_1$	$\mathbf{z}_2 = x_2 + jy_2$
$\mathbf{z}_1 = \mathbf{z}_2$ iff $x_1 = x_2$ and $y_1 = y_2$	$\mathbf{z}_1 + \mathbf{z}_2 = (x_1 + x_2) + j(y_1 + y_2)$
$\mathbf{z}_1\mathbf{z}_2 = \lvert\mathbf{z}_1\rvert\lvert\mathbf{z}_2\rvert e^{j(\theta_1+\theta_2)}$	$\dfrac{\mathbf{z}_1}{\mathbf{z}_2} = \dfrac{\lvert\mathbf{z}_1\rvert}{\lvert\mathbf{z}_2\rvert} e^{j(\theta_1-\theta_2)}$
$-1 = e^{j\pi} = e^{-j\pi} = 1\angle\pm 180^\circ$	
$j = e^{j\pi/2} = 1\angle 90^\circ$	$-j = e^{-j\pi/2} = 1\angle -90^\circ$
$\sqrt{j} = \pm e^{j\pi/4} = \pm\dfrac{(1+j)}{\sqrt{2}}$	$\sqrt{-j} = \pm e^{-j\pi/4} = \pm\dfrac{(1-j)}{\sqrt{2}}$

Learn how to perform these with <u>your</u> calculator/computer

Phasor Domain

Convert time domain sinusoidal signal to a complex number in frequency domain – simplifies math!

$$v(t) = V_m \cos(\omega t + \phi) = \mathrm{Re}\left(V_m e^{j\omega t} e^{j\phi}\right) = \mathrm{Re}\left(V e^{j\omega t}\right)$$

$$V = V_m e^{j\phi} = V_m \angle \phi = \textit{phasor representation}$$

Time Domain		Phasor Domain
$v(t) = V_0 \cos \omega t$	$\Longleftrightarrow$	$\mathbf{V} = V_0$
$v(t) = V_0 \cos(\omega t + \phi)$	$\Longleftrightarrow$	$\mathbf{V} = V_0 e^{j\phi}$.

If $\phi = -\pi/2$,

$$v(t) = V_0 \cos(\omega t - \pi/2) \Longleftrightarrow \mathbf{V} = V_0 e^{-j\pi/2}.$$

Phasor Domain and Time Domain

Phasor Domain

Time Domain

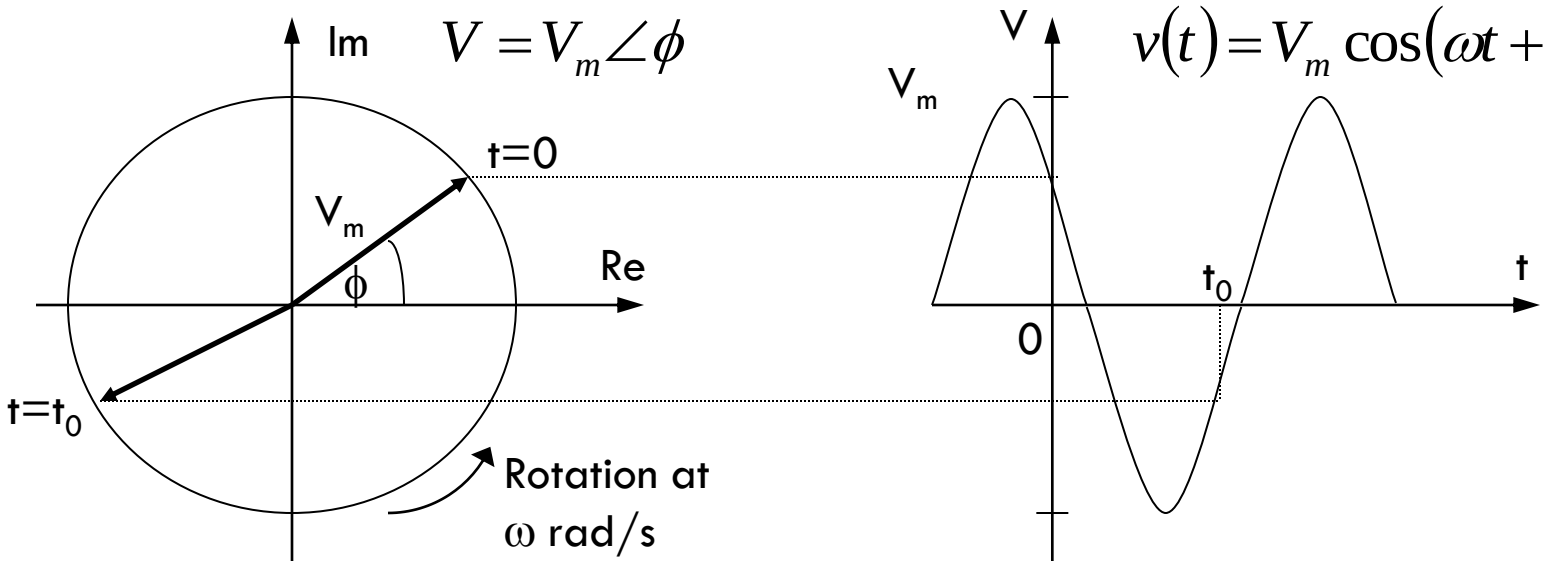

- For input frequency at ω, all circuit response will be at ω
- Only thing we need is magnitude and phase
- Phasors conveniently track magnitude and phase info

Leading and Lagging

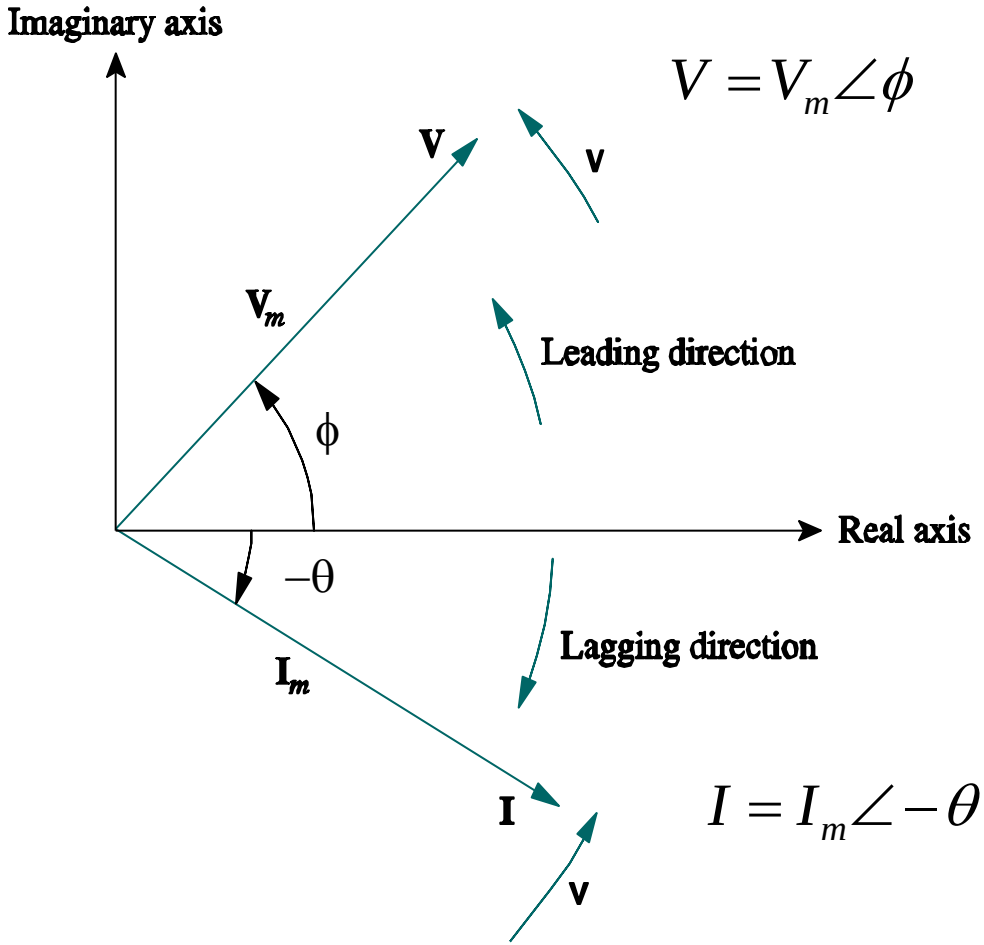

$$V = V_m \angle \phi$$

$$I = I_m \angle -\theta$$

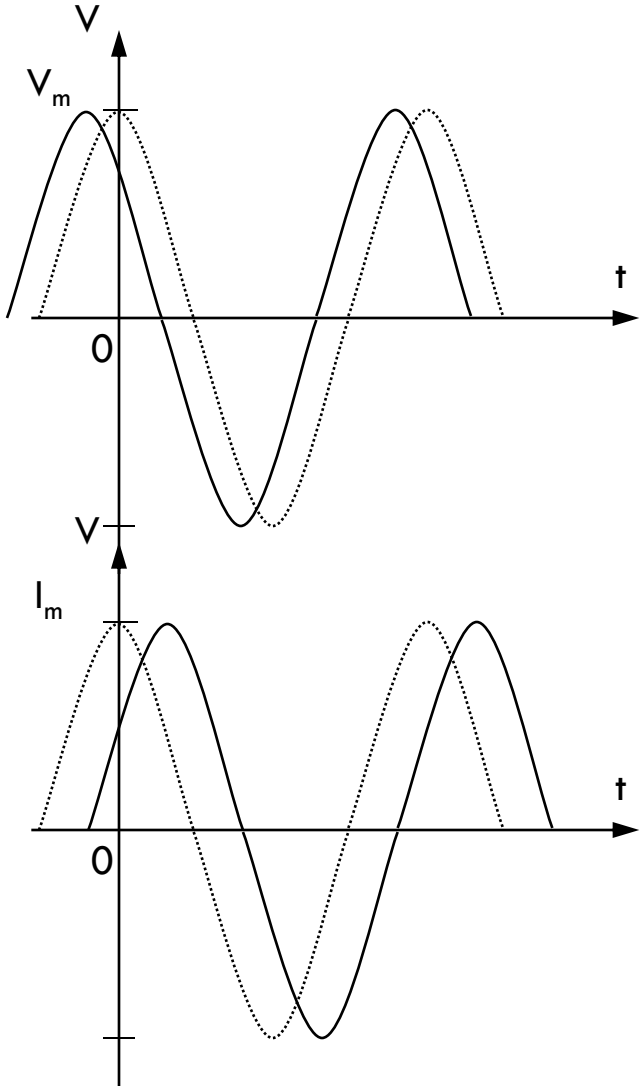

Time and Phasor Domain

$x(t)$		$\mathbf{X}$
$A\cos\omega t$	$\leftrightarrow$	A
$A\cos(\omega t+\phi)$	$\leftrightarrow$	$Ae^{j\phi}$
$-A\cos(\omega t+\phi)$	$\leftrightarrow$	$Ae^{j(\phi\pm\pi)}$
$A\sin\omega t$	$\leftrightarrow$	$Ae^{-j\pi/2}=-jA$
$A\sin(\omega t+\phi)$	$\leftrightarrow$	$Ae^{j(\phi-\pi/2)}$
$-A\sin(\omega t+\phi)$	$\leftrightarrow$	$Ae^{j(\phi+\pi/2)}$
$\frac{d}{dt}(x(t))$	$\leftrightarrow$	$j\omega\mathbf{X}$
$\frac{d}{dt}[A\cos(\omega t+\phi)]$	$\leftrightarrow$	$j\omega Ae^{j\phi}$
$\int x(t)\,dt$	$\leftrightarrow$	$\frac{1}{j\omega}\mathbf{X}$
$\int A\cos(\omega t+\phi)\,dt$	$\leftrightarrow$	$\frac{1}{j\omega}Ae^{j\phi}$

It is much easier to deal with the exponentials in phasor domain than sinusoidal relations in time domain

Just need to track magnitude/phase, knowing that everything is at frequency ω

Phasor Relation for Resistors

Current through resistor in time domain is

$$i = I_m \cos(\omega t + \phi)$$

Time Domain

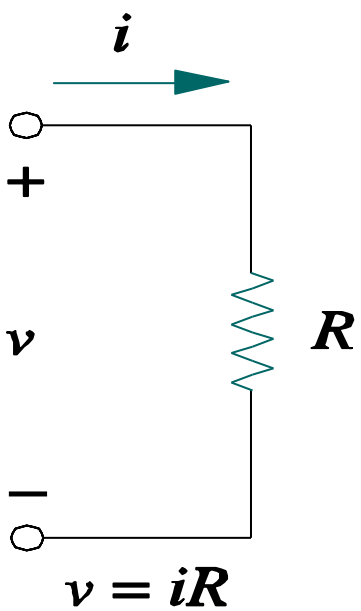

Frequency Domain

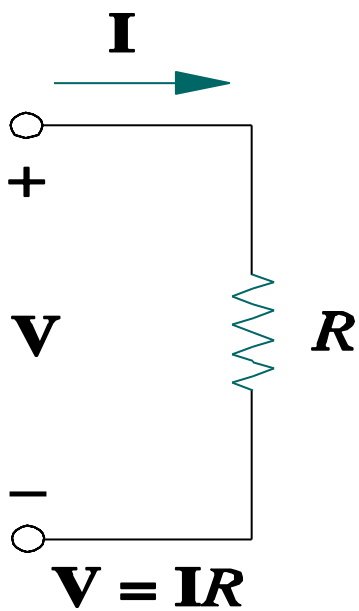

$$v = iR = RI_m \cos(\omega t + \phi)$$

$$V = RI_m \angle \phi$$

$$V = IR$$

$$I = I_m \angle \phi$$

Phasor Relation for Inductors

Current through inductor in time domain is

$$i = I_m \cos(\omega t + \phi)$$

Time Domain

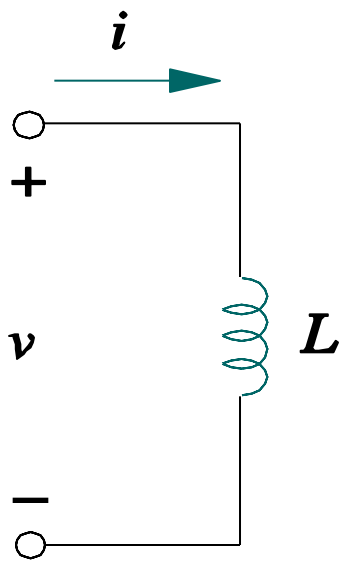

$$v = L\frac{di}{dt}$$

Frequency Domain

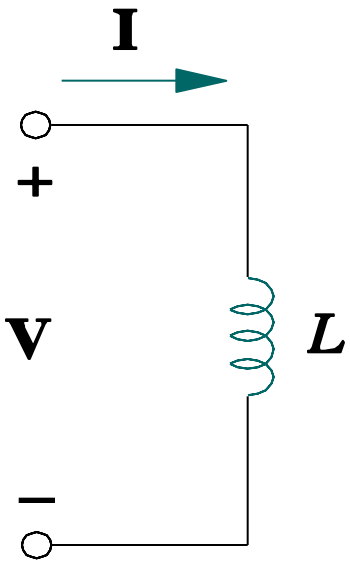

$$\mathbf{V} = j\omega L\mathbf{I}$$

$$v = L\frac{di}{dt} = -\omega L I_m \sin(\omega t + \phi)$$

$$v = \omega L I_m \cos(\omega t + \phi + 90^0)$$

$$V = \omega L I_m \angle\phi e^{j90^0}$$

$$V = j\omega L I_m \angle\phi$$

$$V = j\omega L I$$

Phasor Relation for Capacitors

Voltage across capacitor in time domain is

$$v = V_m \cos(\omega t + \phi)$$

Time Domain

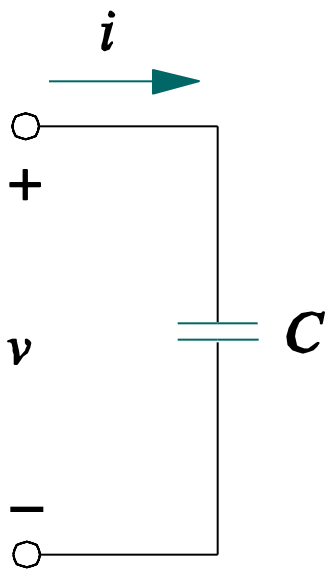

$$i = C\frac{dv}{dt}$$

Frequency Domain

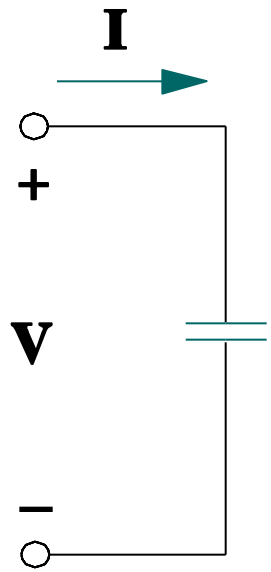

$$\mathbf{I} = j\omega C\mathbf{V}$$

$$i = C\frac{dv}{dt}$$

$$i = \omega C V_m \cos(\omega t + \phi + 90^0)$$

$$i = \omega C V_m \angle\phi e^{j90^0}$$

$$I = j\omega C V_m \angle\phi$$

$$V = \frac{I}{j\omega C}$$

Summary of R, L, C

Property	R	L	C
v–i	$v = Ri$	$v = L\dfrac{di}{dt}$	$i = C\dfrac{dv}{dt}$
V–I	$\mathbf{V} = R\mathbf{I}$	$\mathbf{V} = j\omega L\mathbf{I}$	$\mathbf{V} = \dfrac{\mathbf{I}}{j\omega C}$
Z	R	$j\omega L$	$\dfrac{1}{j\omega C}$
dc equivalent	R	Short circuit	Open circuit
High-frequency equivalent	R	Open circuit	Short circuit
Frequency response	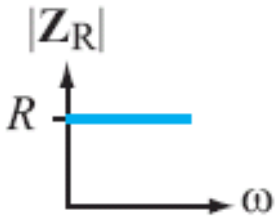	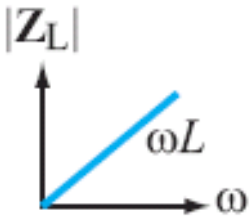	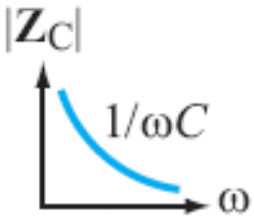

Impedance and Admittance

Impedance is voltage/current

$$Z = \frac{V}{I} = R + jX$$

R = resistance = Re(Z)

X = reactance = Im(Z)

Admittance is current/voltage

$$Y = \frac{I}{V} = G + jB$$

G = conductance = Re(Y)

B = susceptance = Im(Y)

Resistor	$Z = R$	$Y = 1/R$
Inductor	$Z = j\omega L$	$Y = 1/j\omega L$
Capacitor	$Z = 1/j\omega C$	$Y = j\omega C$

Note that this is equivalent to "s-domain" with s=jω!

AC Phasor Analysis General Procedure

Using this procedure, we can apply our techniques from DC Analysis

Step 1
Adopt Cosine Reference
(Time Domain)

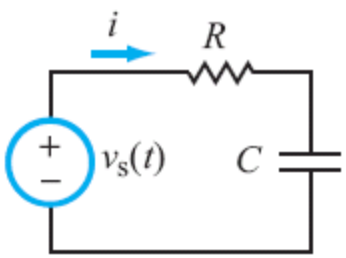

$v_s(t) = 12\sin(\omega t - 45°)$

Step 2
Transfer to Phasor Domain

$i \rightarrow \mathbf{I}$
$v \rightarrow \mathbf{V}$
$R \rightarrow \mathbf{Z}_R = R$
$L \rightarrow \mathbf{Z}_L = j\omega L$
$C \rightarrow \mathbf{Z}_C = 1/j\omega C$

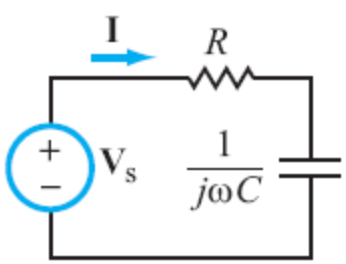

$\mathbf{V}_s = 12e^{-j135°}$ (V)

Step 3
Cast Equations in
Phasor Form

$$\mathbf{I}\left(R + \frac{1}{j\omega C}\right) = \mathbf{V}_s$$

Step 4
Solve for Unknown Variable
(Phasor Domain)

$$\mathbf{I} = \frac{\mathbf{V}_s}{R + \frac{1}{j\omega C}}$$

Step 5
Transform Solution
Back to Time Domain

$$i(t) = \Re\mathfrak{e}[\mathbf{I}e^{j\omega t}]$$
$$= 6\cos(\omega t - 105°) \text{ (mA)}$$

AC Example: Superposition

Find v_0 for circuit below, using superposition

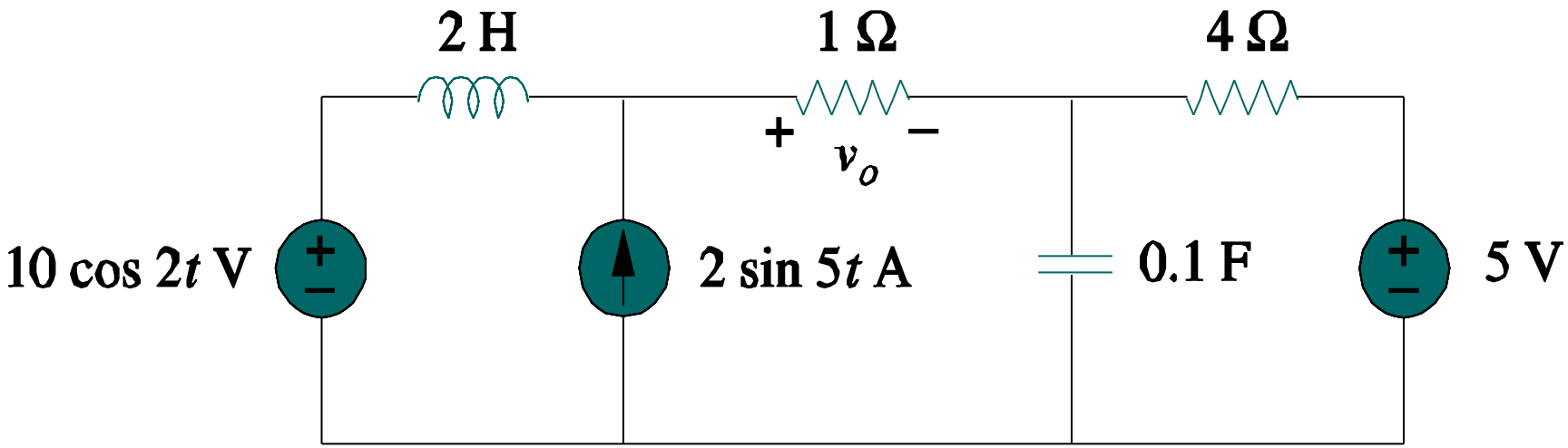

Allows us to analyze multiple sources, different frequency

- DC (5V) source
- cos and sin sources at 2 different frequencies

AC Example: Superposition

Response from 5V source

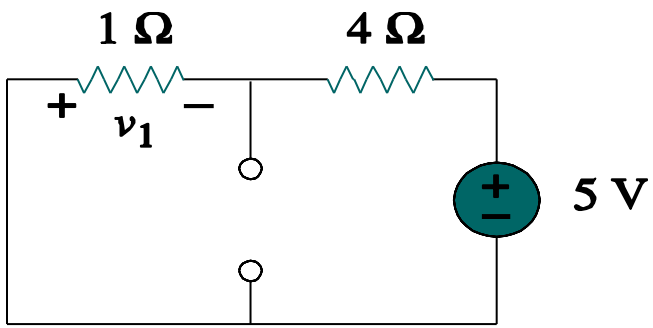

$$-v_1 = 1V$$

Response from AC voltage source

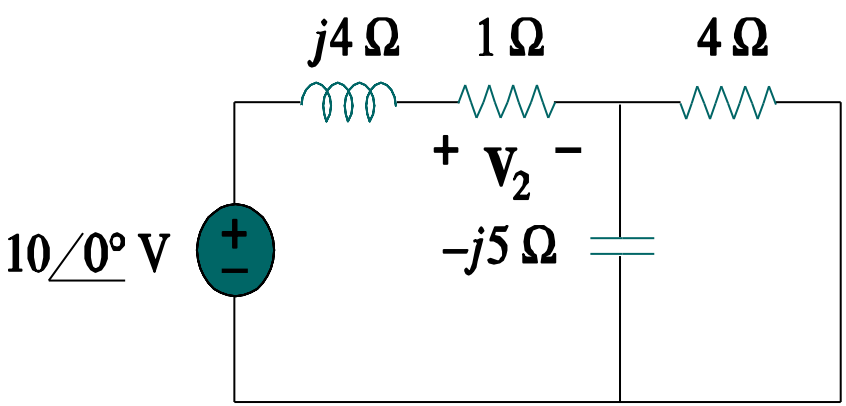

$$Z = -j5 \parallel 4 = 2.439 - j1.951$$

$$V_2 = \frac{1}{1 + j4 + Z}\left(10\angle 0^o\right)$$

$$V_2 = 2.498\angle -30.79^o$$

$$v_2 = 2.498\cos\left(2t - 30.79^o\right)$$

AC Example: Superposition

Response from AC current source

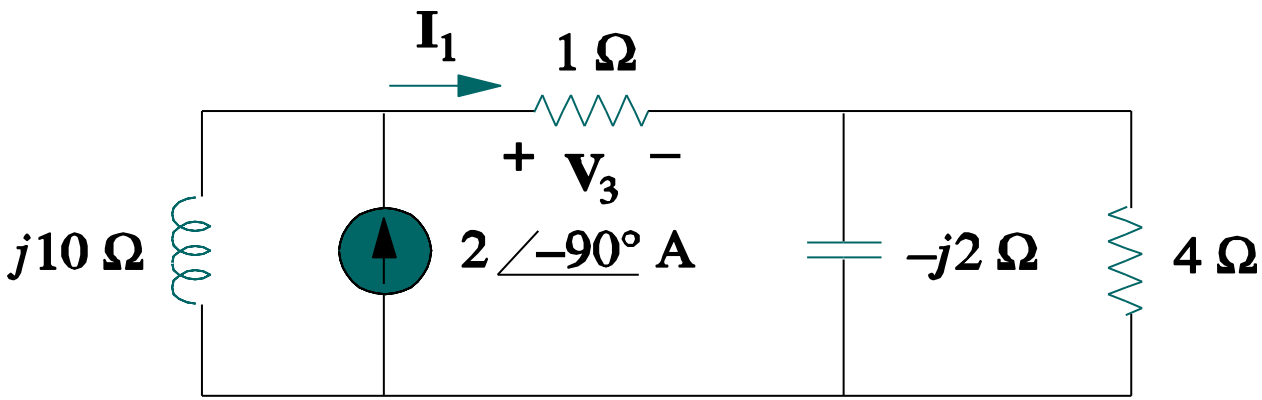

$$Z_1 = -j2 \parallel 4 = 0.8 - j1.6$$

$$I_1 = \frac{j10}{j10 + 1 + Z_1}\left(2\angle -90^o\right)$$

$$V_3 = 1I_1 = 2.328\angle -80^o$$

$$v_3 = 2.33\cos\left(5t - 80^o\right)$$

Total Response

$$v_0 = v_1 + v_2 + v_3$$

$$v_0 = -1 + 2.498\cos\left(2t - 30.79^o\right) + 2.33\cos\left(5t - 80^o\right)$$

Linear Circuit Properties

Thevenin/Norton, Source Transformation Also Valid

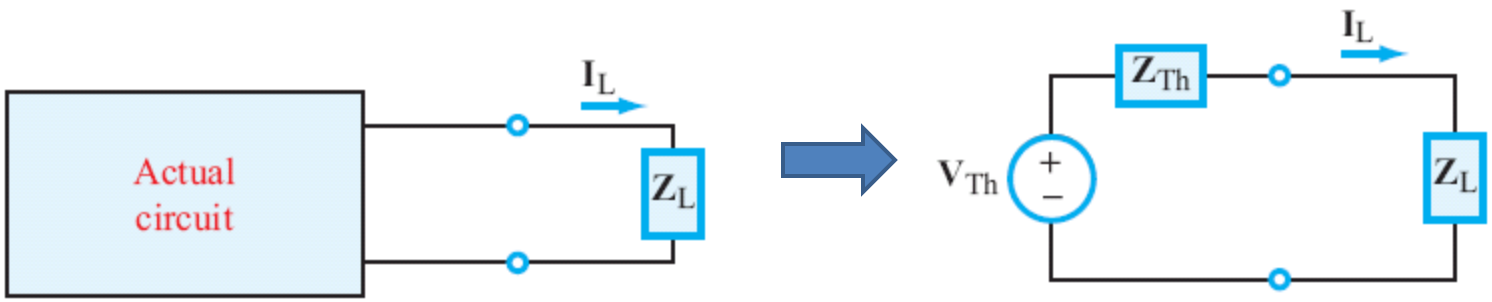

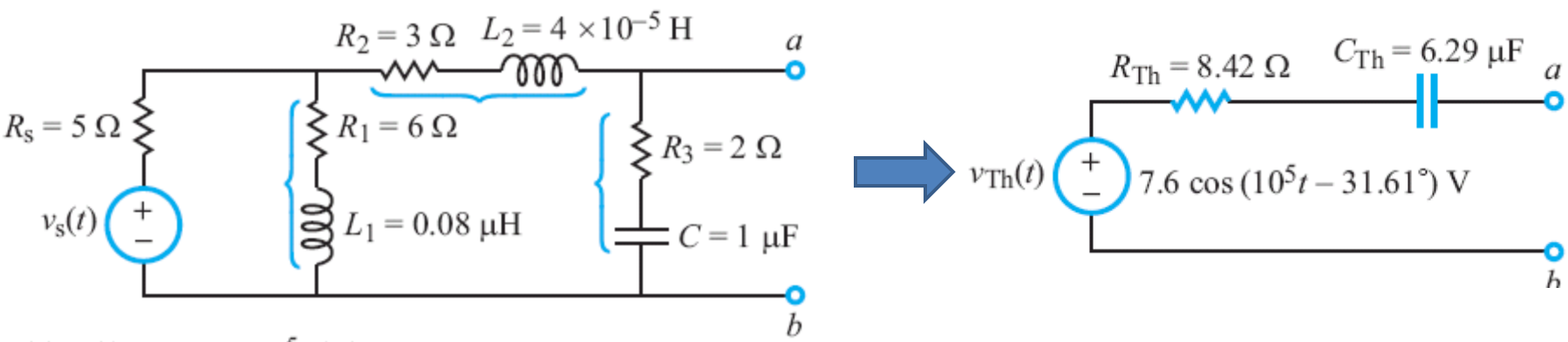

(a) $v_s(t) = 10 \cos 10^5 t$ (V)

Phasor Diagrams

Capacitor

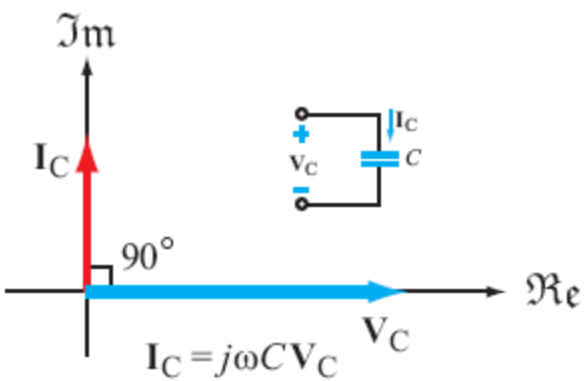

Inductor

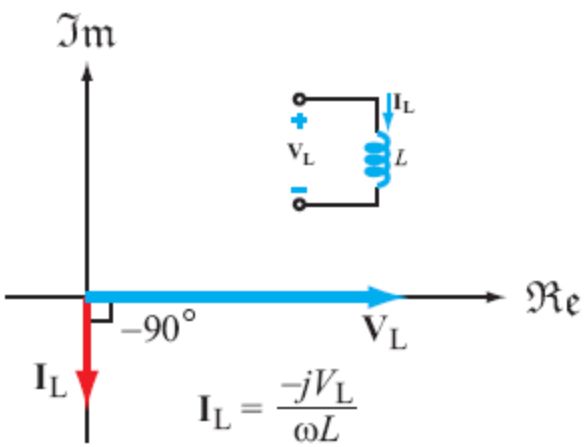

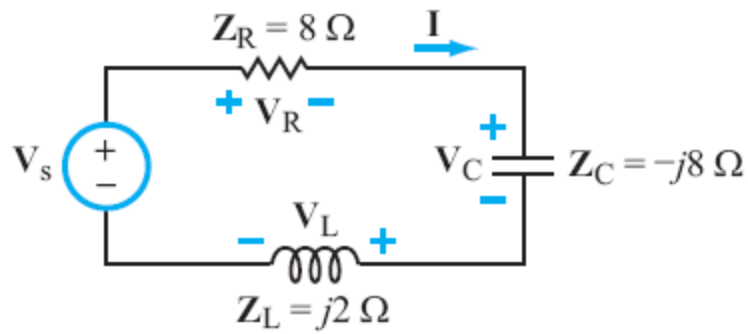

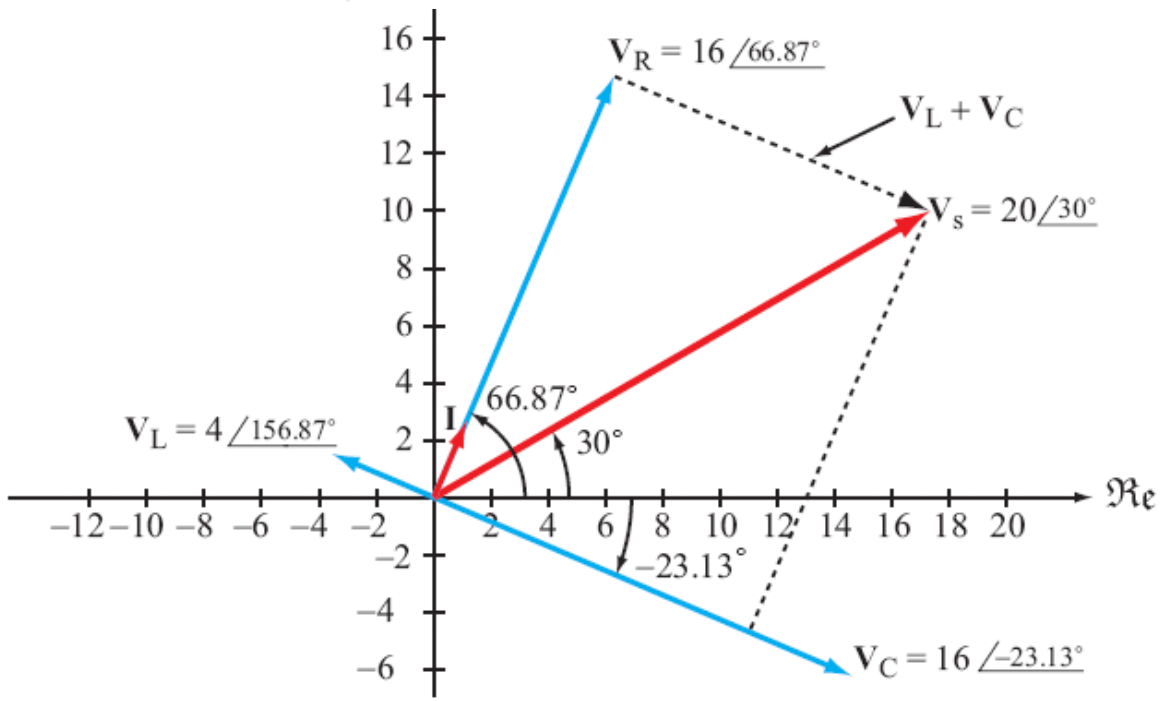

Phase Shift Circuits

- Generate a phase lead/lag
- Useful for *impedance matching*

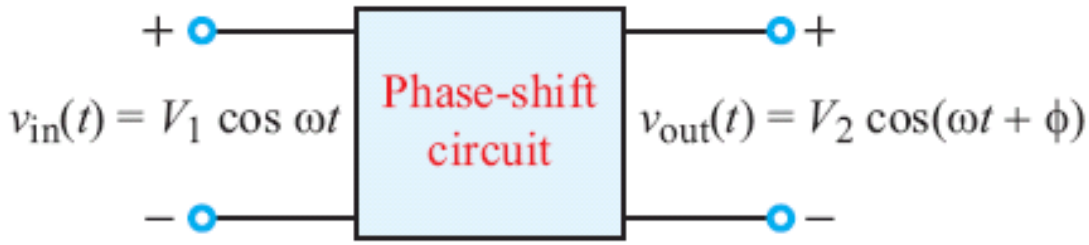

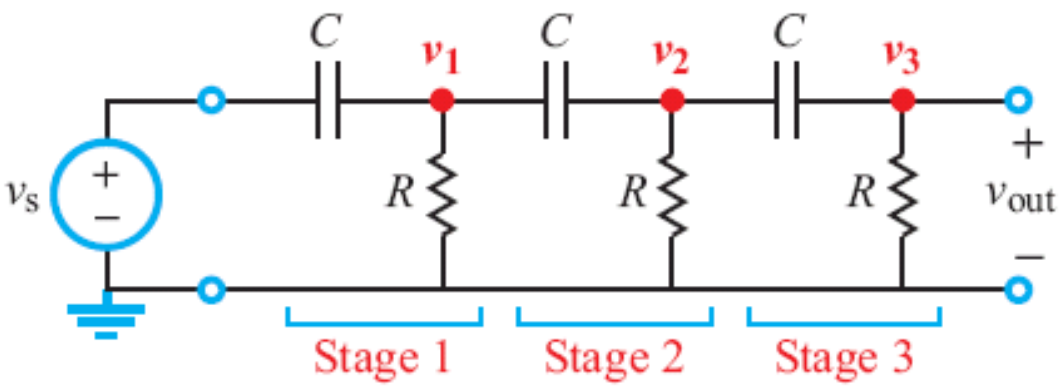

$$\frac{\mathbf{V}_3}{\mathbf{V}_s} = \frac{x^3}{(x^3 - 5x) + j(1 - 6x^2)},$$

$$x = \omega RC.$$

Single Stage
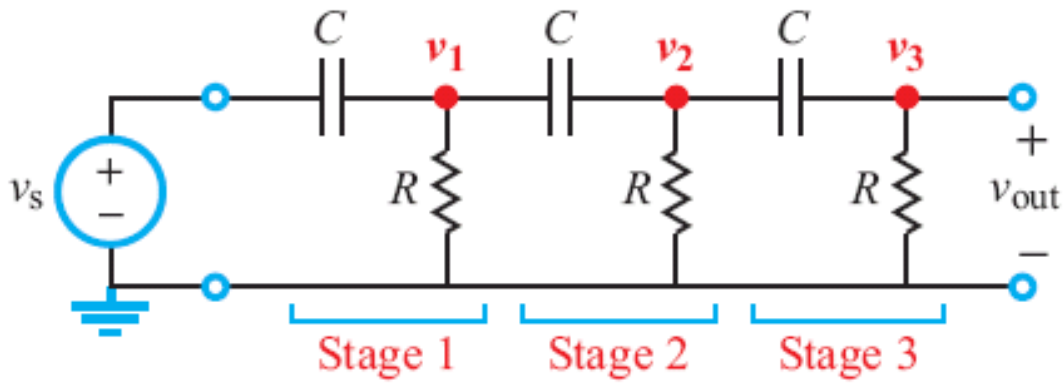
Phase Shift Circuits