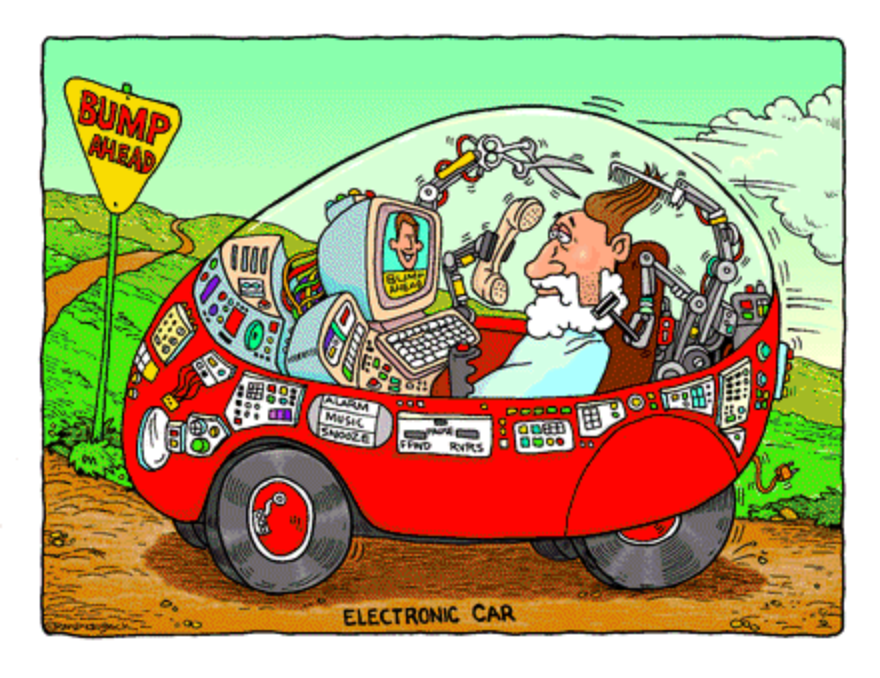

NETWORK THEOREMS II: THEVENIN/NORTON EXAMPLES

© Fred Terry
Winter, 2010

Messy Example

- Suppose we have our now familiar circuit but we add a Current Source load I_L and we want to know V_{ab}
- Currently, our only choice is to do Nodal analysis again considering the added load resistor

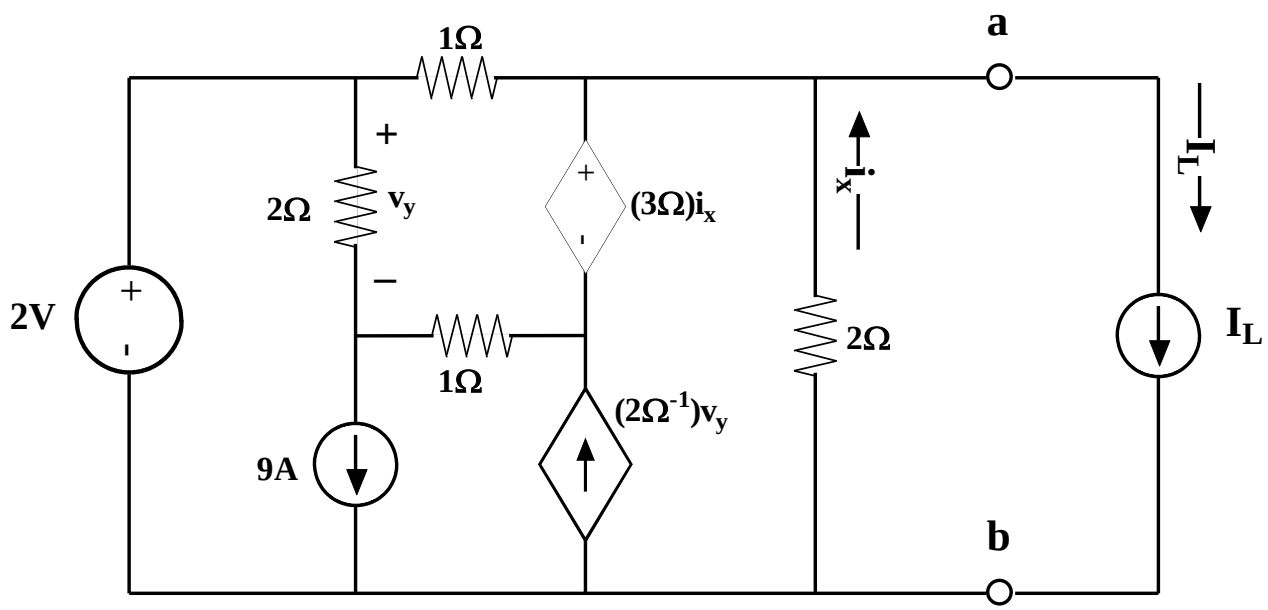

Brute Force Solution

As messy as this looks, since have already done a full, serious nodal analysis, it just adds at term to the 2-4 Super-node KCL:

$$\frac{2V - v_2}{1\Omega} + \frac{v_3 - 2.5v_2}{1\Omega} + \left(-\frac{v_2}{2\Omega}\right) + 2\Omega^{-1}(2V - v_3) = I_L$$

$$\Rightarrow v_2\left[4\Omega^{-1}\right] + v_3\left[1\Omega^{-1}\right] = \left(6A - I_L\right)$$

The *Equation* for node 3 is unchanged :

$$\frac{2V - v_3}{2\Omega} + \frac{2.5v_2 - v_3}{1\Omega} = 9A$$

$$\Rightarrow v_2\left[2.5\Omega^{-1}\right] + v_3\left[-1.5\Omega^{-1}\right] = 8A$$

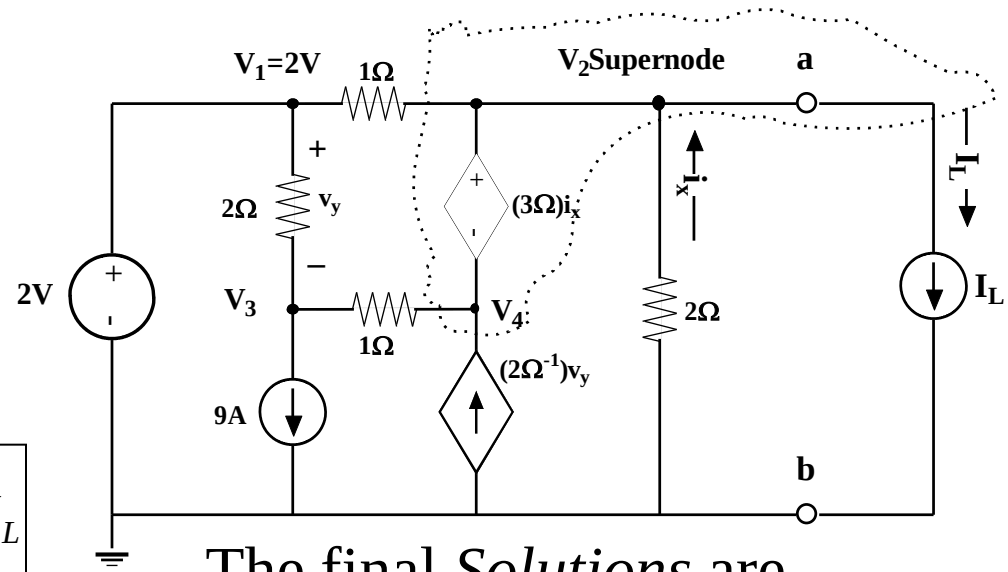

The final *Solutions* are changed:

$$\begin{bmatrix} 4\Omega^{-1} & 1\Omega^{-1} \\ 2.5\Omega^{-1} & -1.5\Omega^{-1} \end{bmatrix} \begin{bmatrix} v_2 \\ v_3 \end{bmatrix} = \begin{bmatrix} \left(6A - I_L\right) \\ 8A \end{bmatrix}$$

$$\Rightarrow \begin{bmatrix} v_2 \\ v_3 \end{bmatrix} = \begin{bmatrix} 2V - \left(\frac{3\Omega}{17}\right) I_L \\ -2V - \left(\frac{5\Omega}{17}\right) I_L \end{bmatrix}$$

Equivalent Circuits

So from the previous result, note that we get:

$$V_2 = V_{ab} = \left[2V - \left(\frac{3}{17}\Omega \right) I_L \right]$$

or

$$I_L = \left[\left(2V - V_{ab} \right) \Big/ \left(\frac{3}{17}\Omega \right) \right]$$

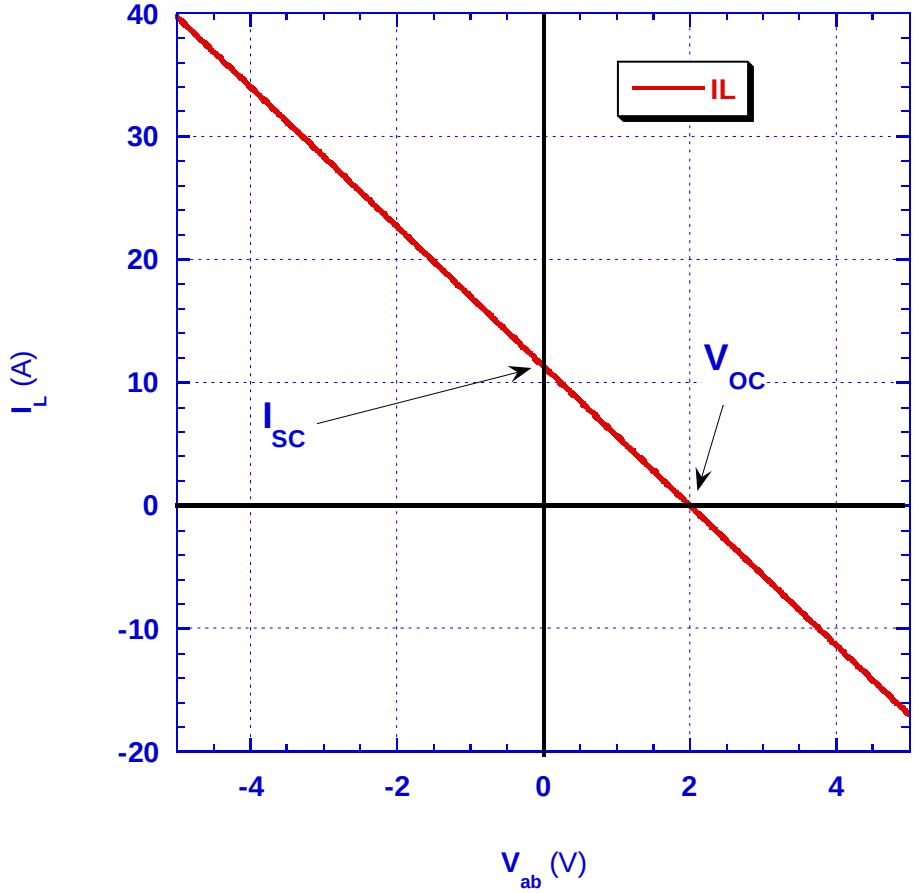

V_{ab} is Linear in I_L

Equivalently

I_L is Linear in V_{ab}

Picture for V_{TH} & R_{TH}

$$V_{ab} = \left[2V - \left(\frac{3}{17}\Omega \right) I_L \right] \qquad or \qquad I_L = \left[\left(2V - V_{ab} \right) \Big/ \left(\frac{3}{17}\Omega \right) \right]$$

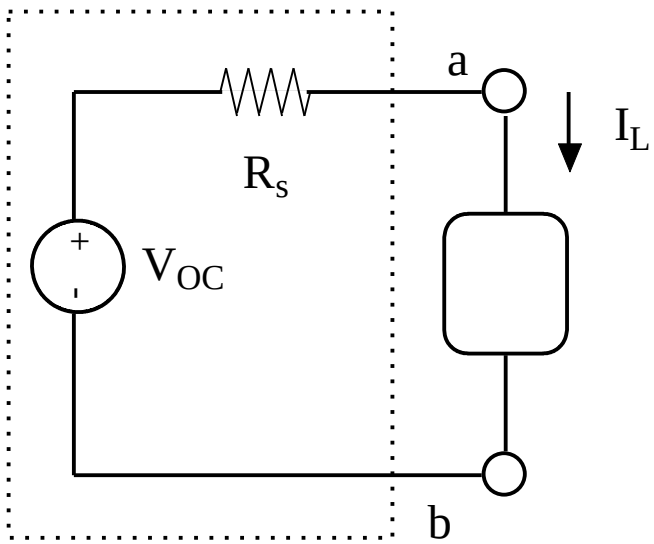

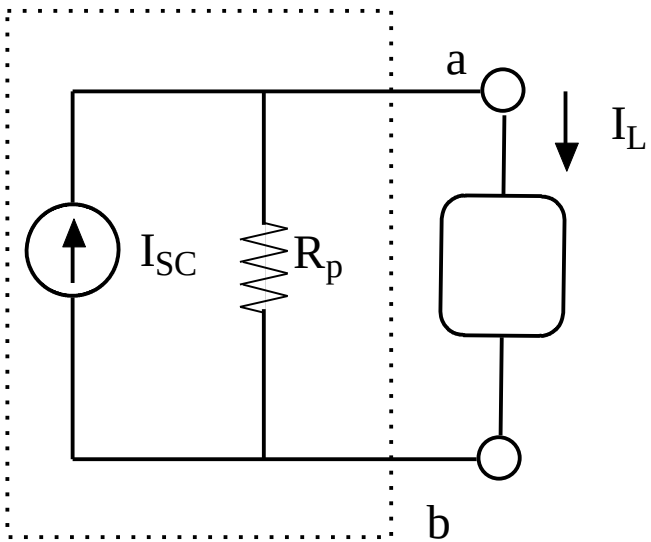

Equivalent Circuits

This I-V curve is generated by either of these two *equivalent* circuits which yield the same I-V at terminals a&b:

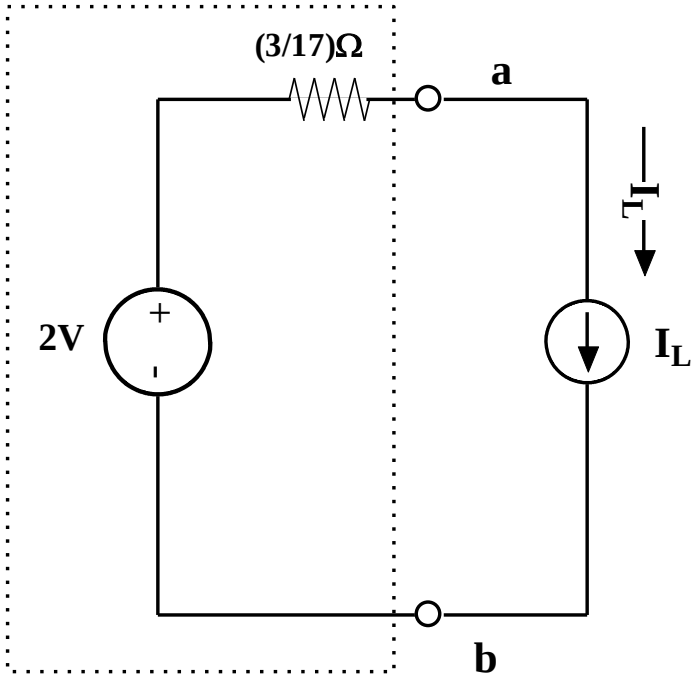

Thevenin Equivalent

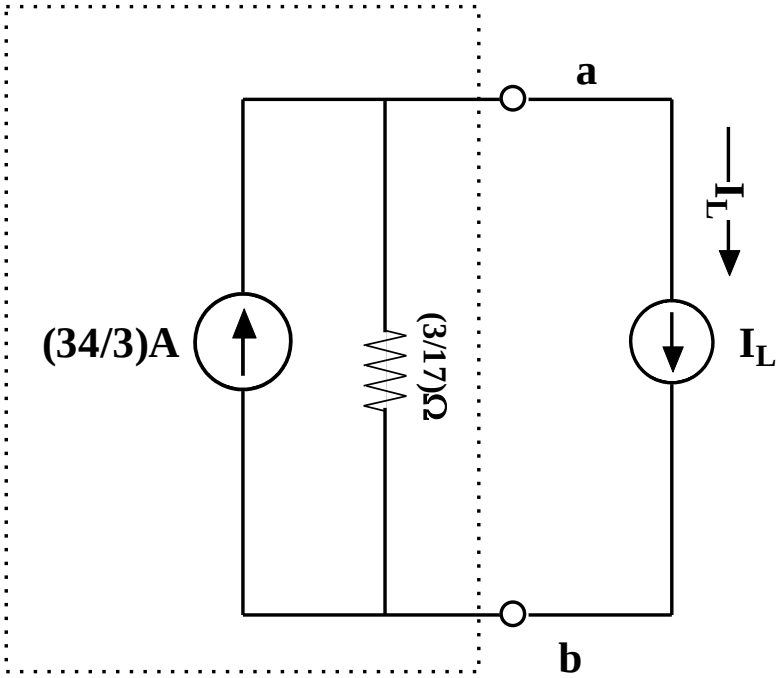

Norton Equivalent

Easier Way

- We already had V_{OC}=+2V from Nodal and Mesh Analysis of this Circuit
- Easier then if we just get R_{eq}

Original Circuit

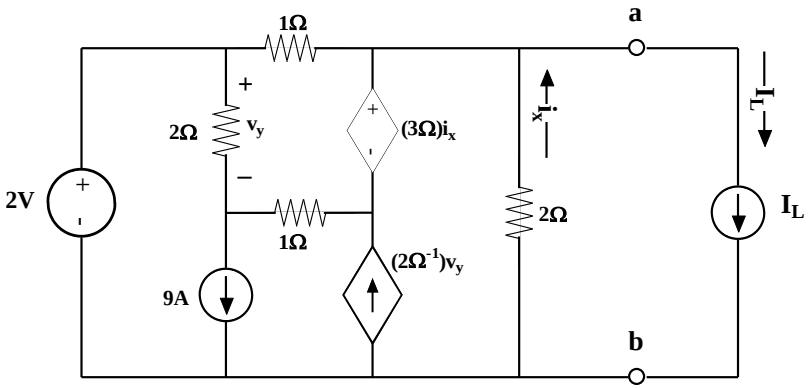

Independent Source off / Test Source Applied

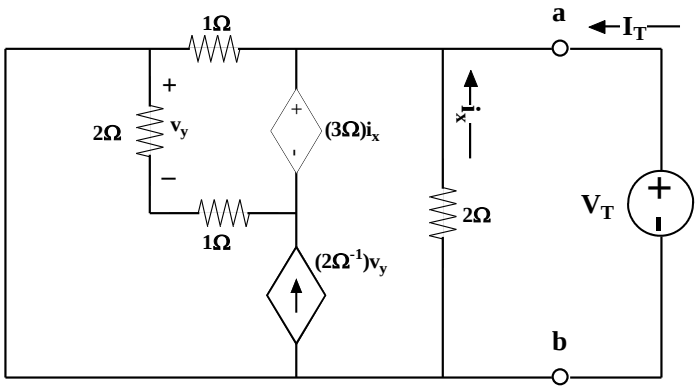

Req Analysis

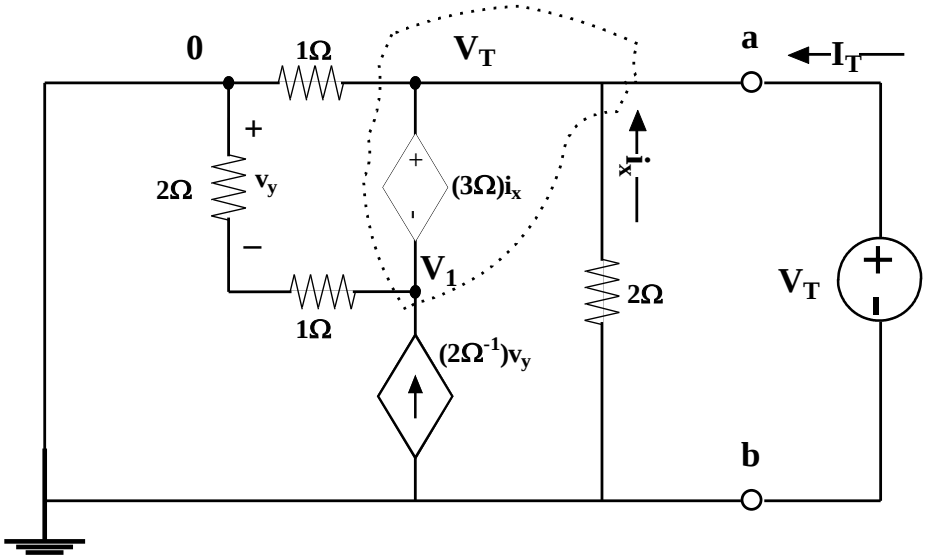

Req Analysis

$$i_x = -V_T / 2\Omega$$

$$\rightarrow 3\Omega i_x = -1.5V_T$$

$$\rightarrow V_1 = V_T - 3\Omega i_x = 2.5V_T$$

$$\rightarrow v_y = -\frac{2}{3}\left(2.5V_T\right) = -\frac{5}{3}V_T$$

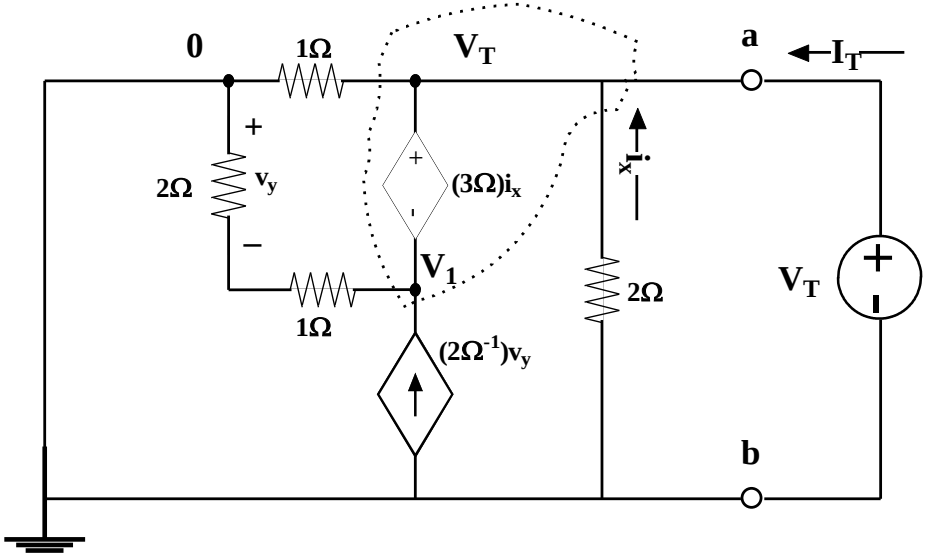

So Doing KCL on the Closed Surface Yields:

$$I_T = \left[\frac{V_T}{2\Omega} + \frac{V_T}{1\Omega} + \frac{2.5V_T}{3\Omega} - \left(2\Omega^{-1}\right)v_y\right]$$

$$= \left[\frac{V_T}{2\Omega} + \frac{V_T}{1\Omega} + \frac{2.5V_T}{3\Omega} + \frac{10V_T}{3\Omega}\right]$$

$$\rightarrow \mathrm{R}_{eq} = \left(V_T / I_T\right) = \frac{3}{17}\Omega$$

I-V Plots & Warning

- Req=V_T/I_T *ONLY* for reduced circuit (independent sources off)
- Trying test source procedure on full circuit will only give another point on complete I-V plot (and is a lot more work)

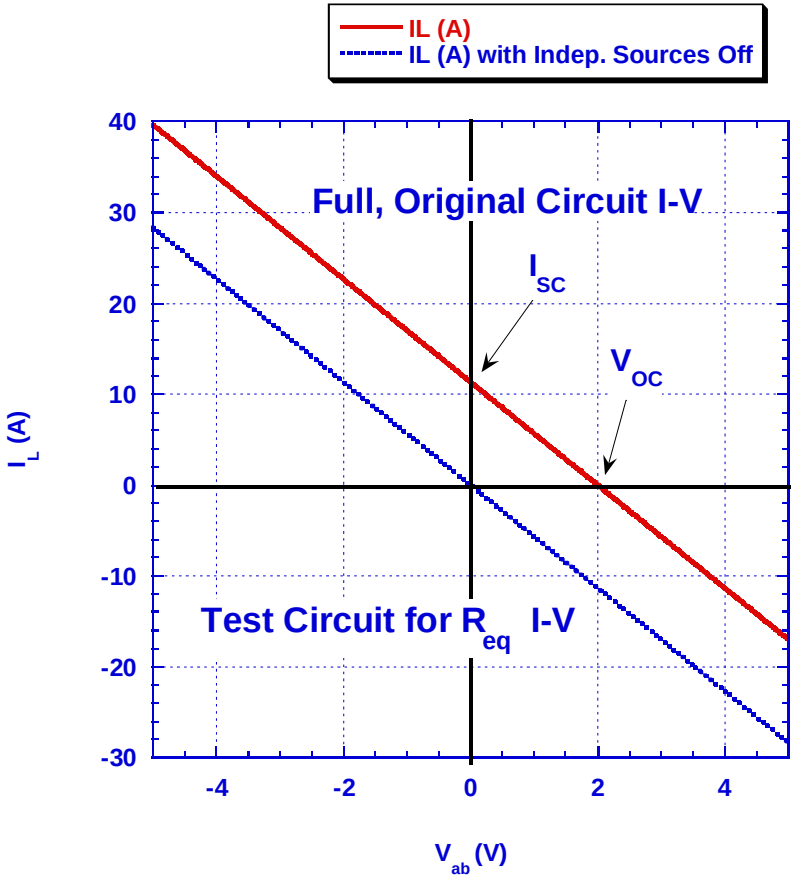

Utility of Equivalents Example: Connect 2 Circuits

Suppose we connected the 2 previously analyzed circuits at a&b

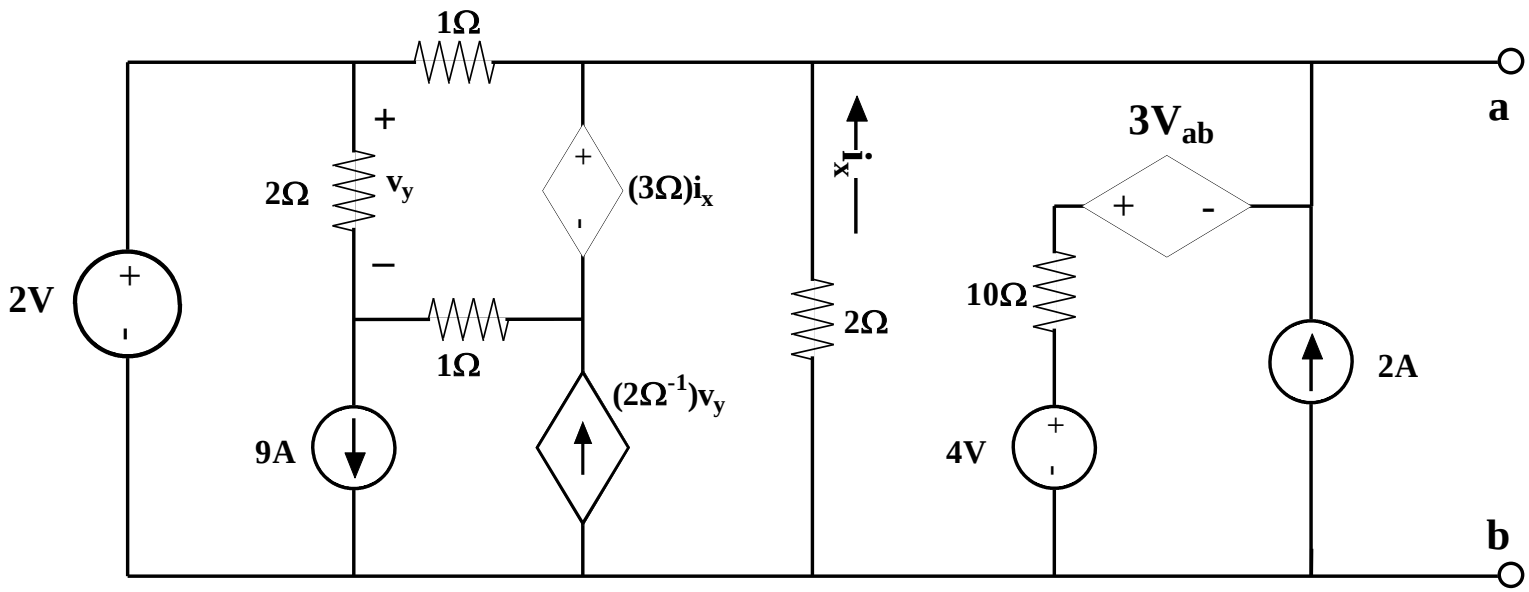

Don't Do a Big New Analysis!

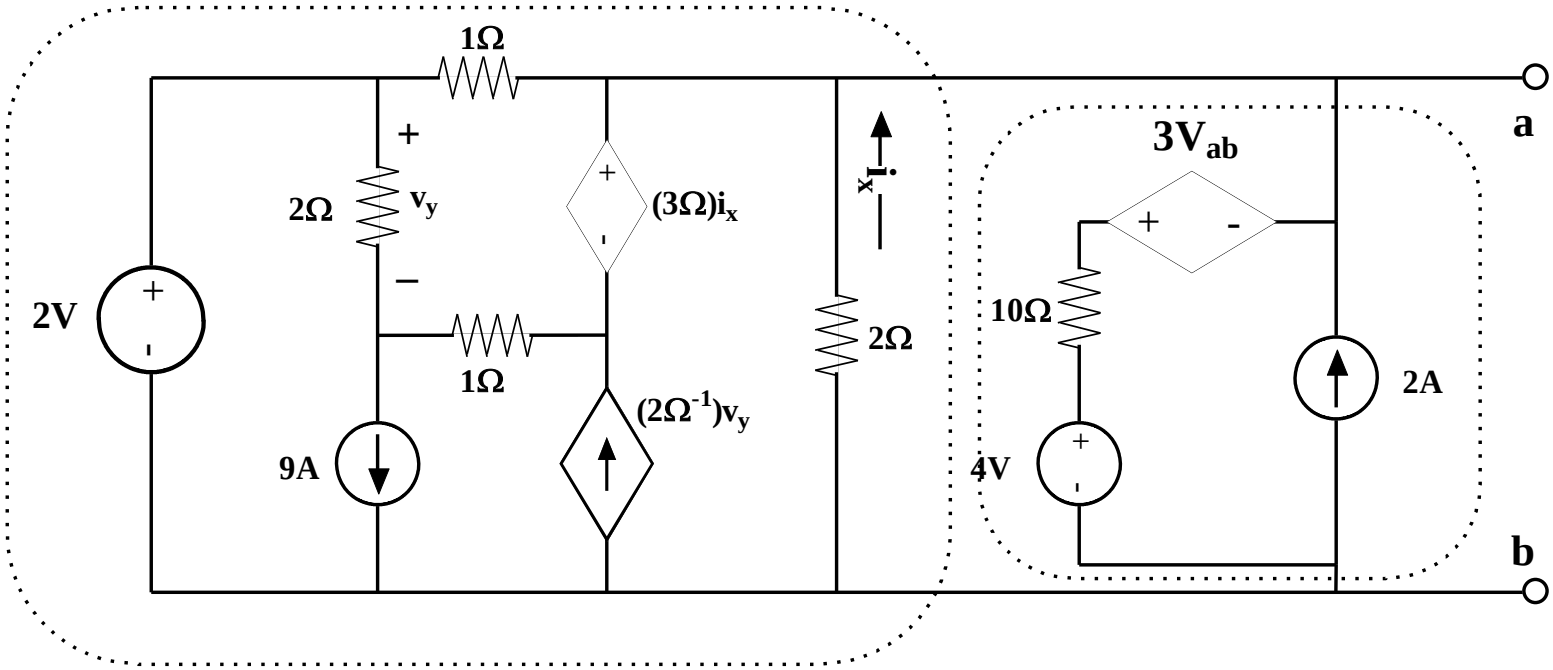

Replace with Equivalent Sub-Circuits

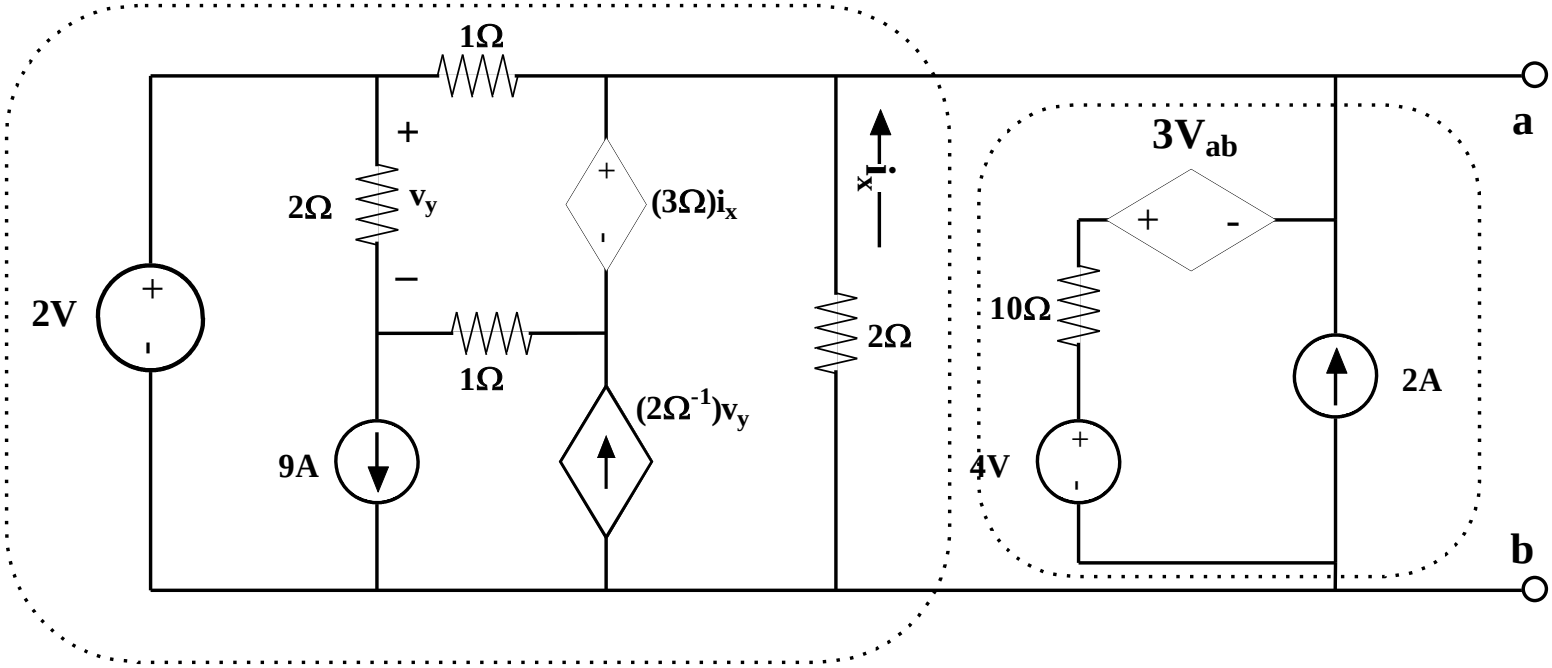
1Ω
2Ω
v_y
+
−
2V
9A
1Ω
(3Ω)i_x
(2Ω^{-1})v_y
i_x
2Ω
3V_{ab}
10Ω
4V
2A
a
b

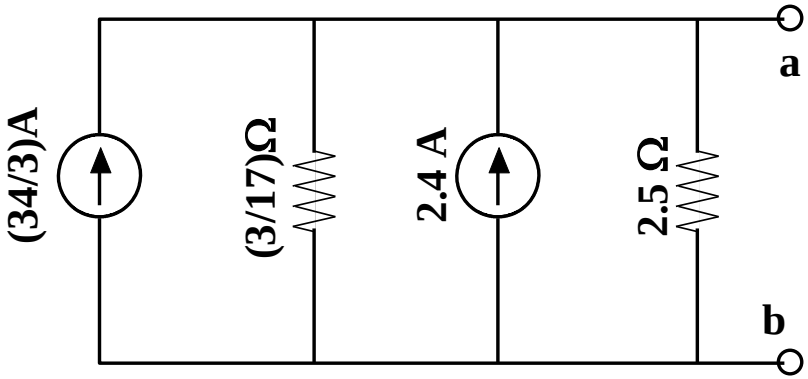
(34/3)A
(3/17)Ω
2.4 A
2.5 Ω
a
b

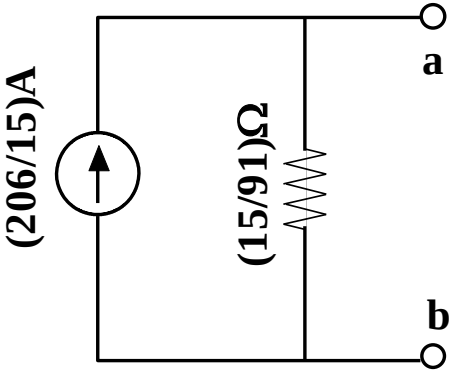
(206/15)A
(15/91)Ω
a
b

Norton and Thevenin Equivalents

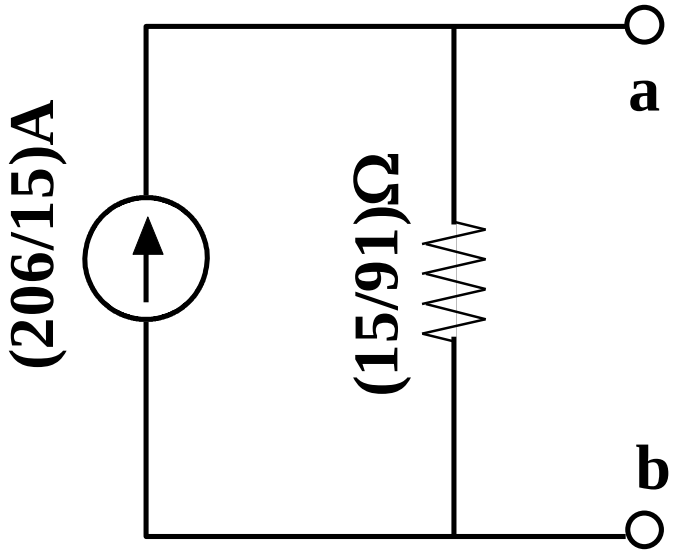

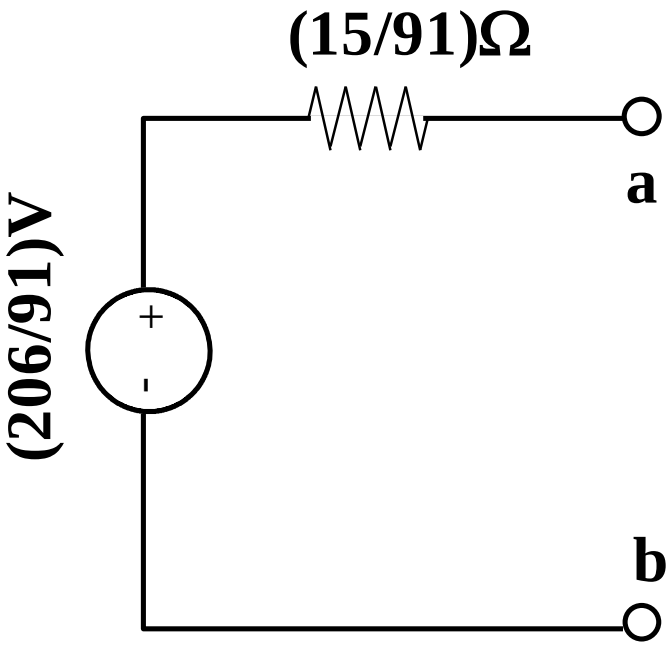

Question: what information is lost in the conversion to these equivalent circuits?

What About this One?

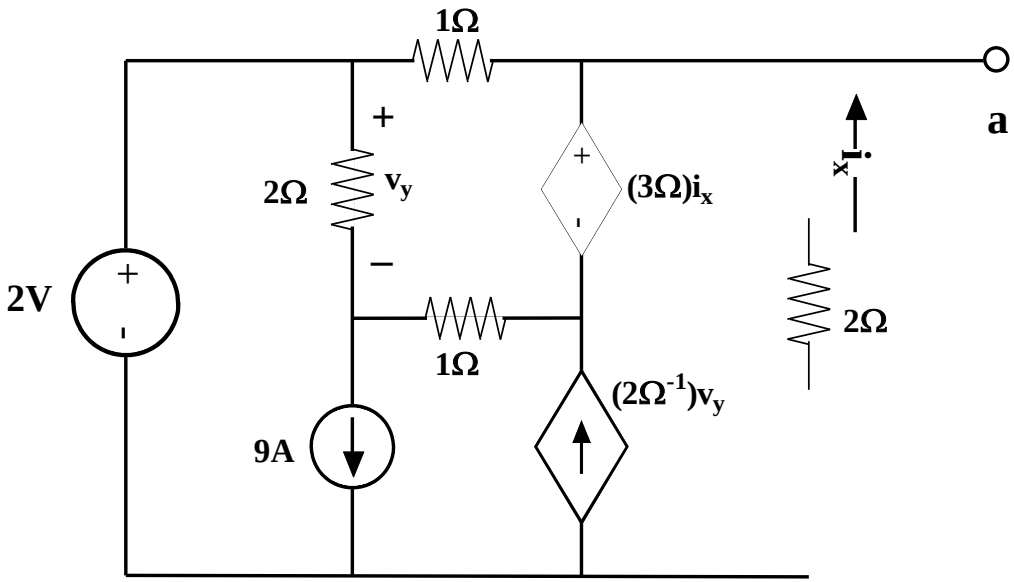

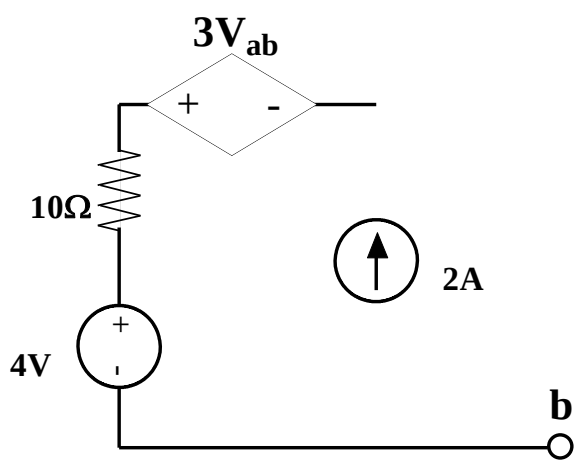

Generalization to Input/Output Situations: Concept of a Two-Port

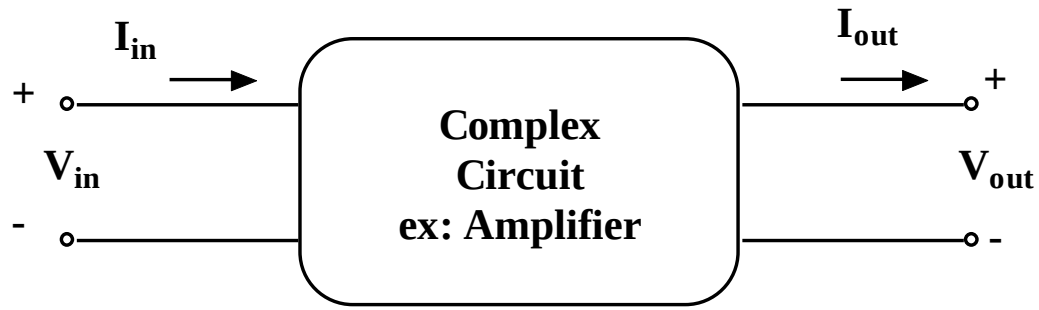

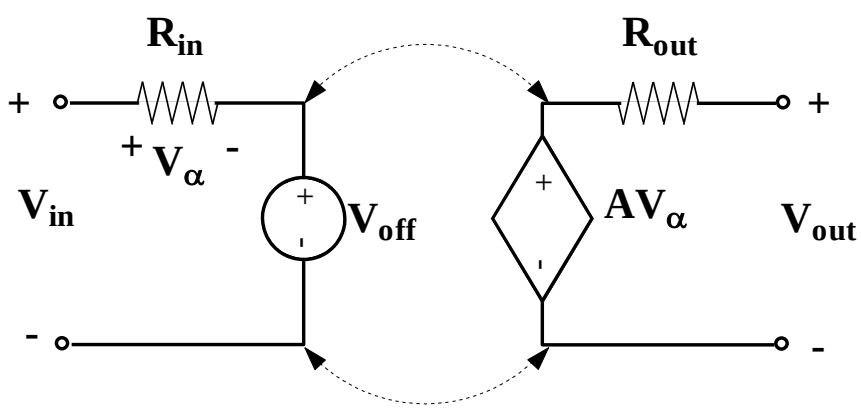

Example z Parameters

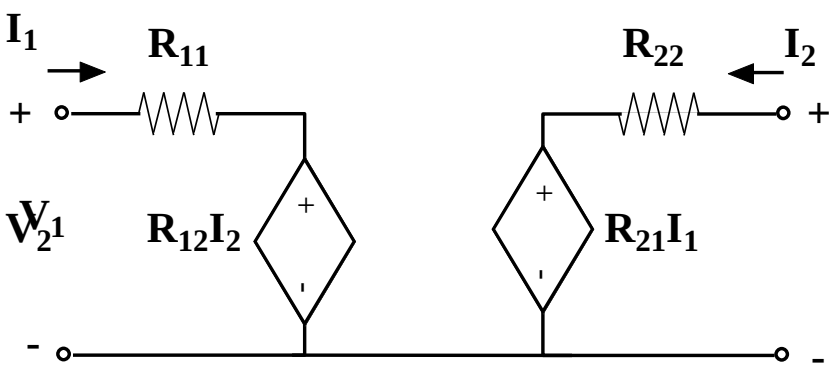

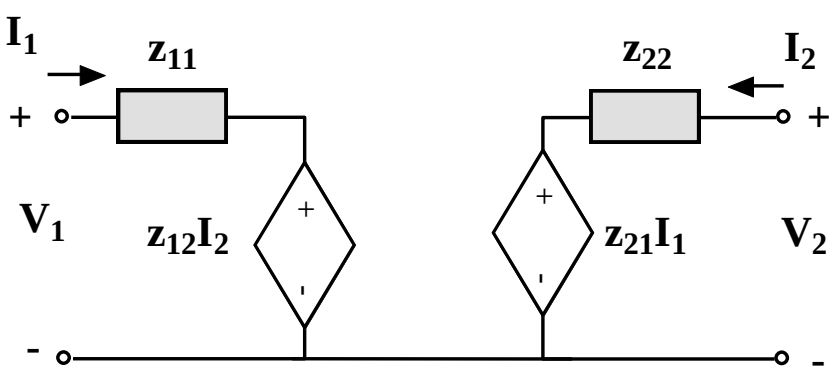

$$V_1 = z_{11} I_1 + z_{12} I_2$$

$$V_2 = z_{21} I_1 + z_{22} I_2$$

$$\begin{bmatrix} V_1 \\ V_2 \end{bmatrix} = \begin{bmatrix} z_{11} & z_{12} \\ z_{21} & z_{22} \end{bmatrix} \begin{bmatrix} I_1 \\ I_2 \end{bmatrix}$$

$$z_{11} = \left.\frac{V_1}{I_1}\right|_{I_2=0} \qquad z_{12} = \left.\frac{V_1}{I_2}\right|_{I_1=0}$$

$$z_{21} = \left.\frac{V_2}{I_1}\right|_{I_2=0} \qquad z_{22} = \left.\frac{V_2}{I_2}\right|_{I_1=0}$$