STEADY-STATE AC ANALYSIS II SINUSOIDS & PHASORS: U&M CHAPTER 7

© Fred Terry
Winter, 2010

AC Steady State Analysis

- Real Sinusoidal Input
  - $V_{in}=V_0\cos(\omega t)$
- Assume Input is Complex

$$V_{in}(t)=V_0e^{j\omega t}=V_0\left[\cos(\omega t)+j\sin(\omega t)\right]$$

$$\mathrm{Re}\,al\ Input\ Signal$$

$$V_{in}(t)=\mathrm{Re}\left[V_{in}(t)\right]$$

- By Superposition, ALL Circuit Quantities of Interest (voltages, currents) are given by taking the Real Part of the Response to the Complex Signal

Taylor Series Expansions Around x=0 (MacLaurin Series) & Euler's Relation

$$f(x) = f(0) + xf'(0) + \frac{x^2}{2!} f''(0) + \frac{x^3}{3!} f''(0) + \ldots + \frac{x^n}{n!} f^{(n)}(0) + \ldots = \sum_{k=0}^{\infty} \frac{x^k}{k!} f^{(k)}(0)$$

$$e^x = 1 + x + \frac{x^2}{2!} + \frac{x^3}{3!} + \ldots = \sum_{k=0}^{\infty} \frac{x^k}{k!}$$

$$\cos(x) = \cos(0) - x\sin(0) - \frac{x^2}{2!}\cos(0) + \frac{x^3}{3!}\sin(0) + \frac{x^4}{4!}\cos(0) + \ldots = 1 - \frac{x^2}{2!} + \frac{x^4}{4!} - \frac{x^6}{6!} + \ldots = \sum_{\substack{k=0 \\ k\,even}}^{\infty} \frac{x^k}{k!}(-1)^{k/2}$$

$$\sin(x) = x - \frac{x^3}{3!} + \frac{x^5}{5!} - \frac{x^7}{7!} + \ldots = \sum_{\substack{k=0 \\ k\,odd}}^{\infty} \frac{x^k}{k!}(-1)^{(k-1)/2}$$

$$j \equiv \sqrt{-1}$$

$$\begin{aligned}
e^{jx} &= 1 + jx + j^2 \frac{x^2}{2!} + j^3 \frac{x^3}{3!} + j^4 \frac{x^4}{4!} + j^5 \frac{x^5}{5!} + j^6 \frac{x^6}{6!} + \ldots \\
&= 1 + jx - \frac{x^2}{2!} - j\frac{x^3}{3!} + \frac{x^4}{4!} + j\frac{x^5}{5!} - \frac{x^6}{6!} + \ldots \\
&= \left(1 - \frac{x^2}{2!} + \frac{x^4}{4!} - \frac{x^6}{6!} + \ldots\right) + j\left(x - \frac{x^3}{3!} + \frac{x^5}{5!} + \ldots\right) \\
&= \cos(x) + j\sin(x)
\end{aligned}$$

AC Steady State Analysis II

- <u>For a Linear Circuit: If Input Signal is at frequency ω, All Circuit Responses are at the same frequency ω</u>
  - Outputs are Different only in Magnitude and Phase, not Frequency
  - Non-Linearities Produce Harmonics (2ω, 3ω, etc.)
- Multiple Frequency Problems Are Handled by Superposition
- When Working a Single Frequency Problem, Issue is Finding Magnitudes and Phases not Frequency
  - Concept of Phasor

Basic Complex Numbers: Polar/Rectangular Representation

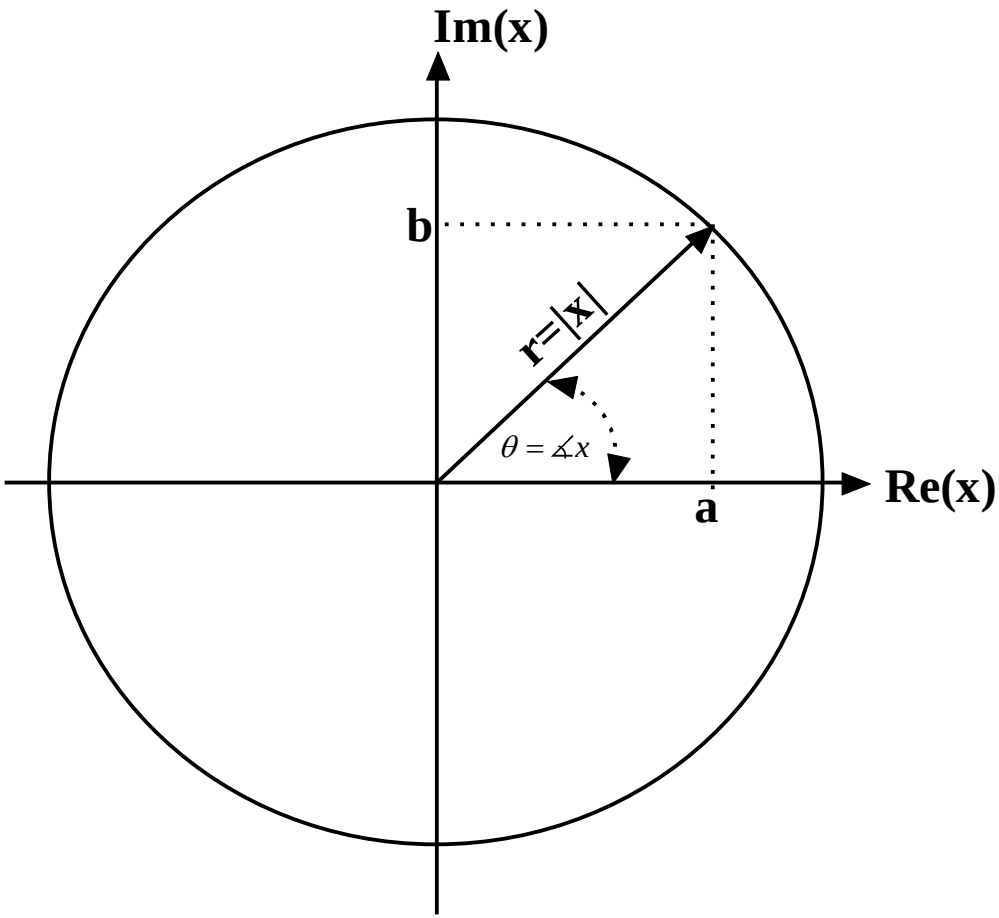

Basic Complex Math

$$e^{j(\omega t+\phi)} = \cos(\omega t+\phi) + j\sin(\omega t+\phi) \qquad \left|e^{j(\omega t+\phi)}\right| = 1$$

If $\boldsymbol{z_1}, \boldsymbol{z_2}$ *are* ***complex numbers*** *with*

$$\boldsymbol{z_1} = r_1\measuredangle\phi_1 = x_1 + jy_1 = r_1 e^{j\phi_1} \qquad \boldsymbol{z_2} = r_2\measuredangle\phi_2 = x_2 + jy_2 = r_2 e^{j\phi_2}$$

Addition:

$$(\boldsymbol{z_1}+\boldsymbol{z_2}) = (x_1+x_2) + j(y_1+y_2) \neq \textit{Any Easy Combination of } r_1\measuredangle\phi_1, r_2\measuredangle\phi_2$$

Subtraction:

$$(\boldsymbol{z_1}-\boldsymbol{z_2}) = (x_1-x_2) + j(y_1-y_2) \neq \textit{Any Easy Combination of } r_1\measuredangle\phi_1, r_2\measuredangle\phi_2$$

Multiplication:

$$\boldsymbol{z_1}\boldsymbol{z_2} = r_1 r_2 \measuredangle(\phi_1+\phi_2)$$

Division:

$$(\boldsymbol{z_1}/\boldsymbol{z_2}) = (r_1/r_2)\measuredangle(\phi_1-\phi_2)$$

Powers:

$$(\boldsymbol{z_1})^m = r_1^m \measuredangle(m\phi_1)$$

Complex Conjugate:

$$\boldsymbol{z_1}^* = r_1 e^{-j\phi_1} = r_1\measuredangle(-\phi_1) = x_1 - jy_1$$

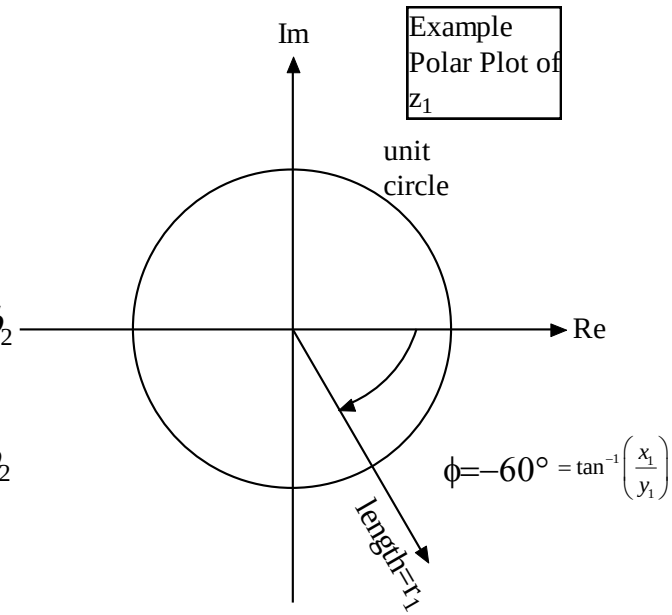

Principle Value of $\tan^{-1}$ Issue

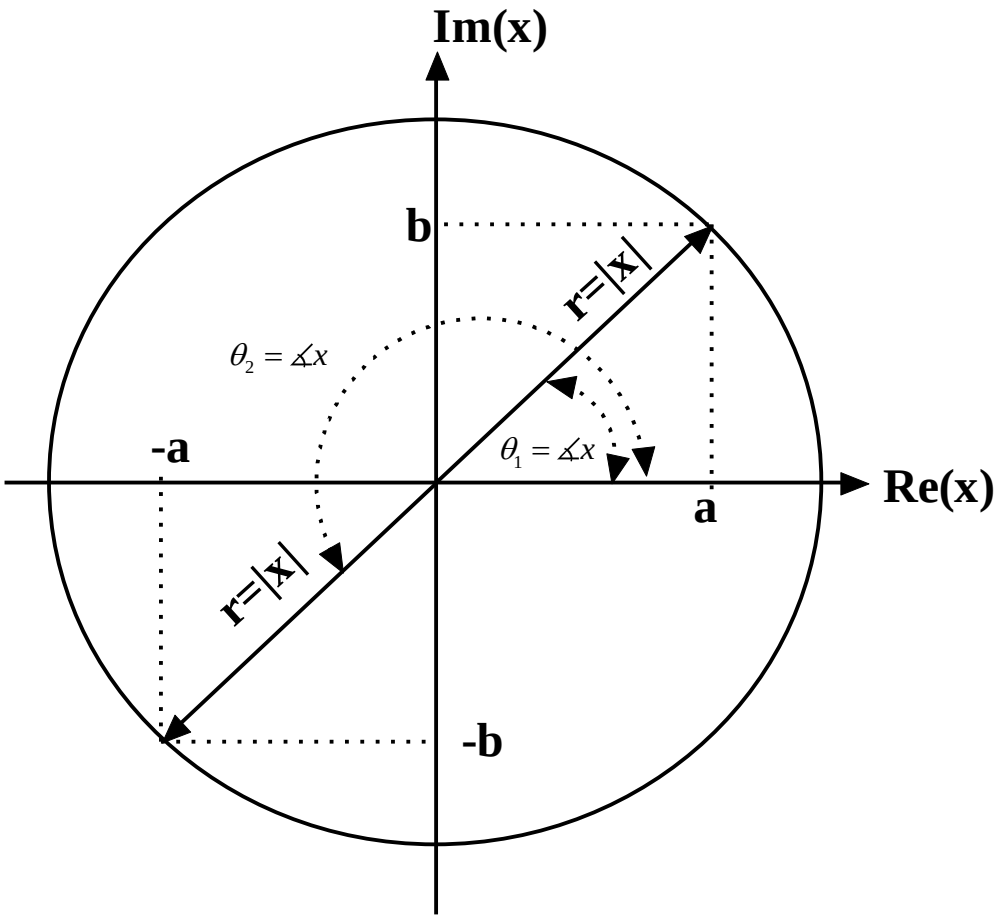

Phasors

$$Input\ of\ Form:$$

$$V_{in} = |V_{in}| e^{j\omega t}$$

$$Output(s)\ will\ be\ of\ form:$$

$$V_{out} = |V_{out}| e^{j(\omega t+\phi)} = \underbrace{\left(|V_{out}| e^{j\phi}\right)}_{Phasor\ of\ V_{out},\ Magnitude\&Phase} e^{j\omega t} = \boldsymbol{V_{out}} e^{j\omega t}$$

$$V_{out} = \mathrm{Re}\left[V_{out}\right] = |V_{out}| \cos(\omega t + \phi)$$

$$Phasor\ written\ as:$$

$$\boldsymbol{V_{out}} = |V_{out}| \measuredangle \phi$$

Phase/Phasor Plot: $\phi=30°=\pi/6$ Signal Advanced

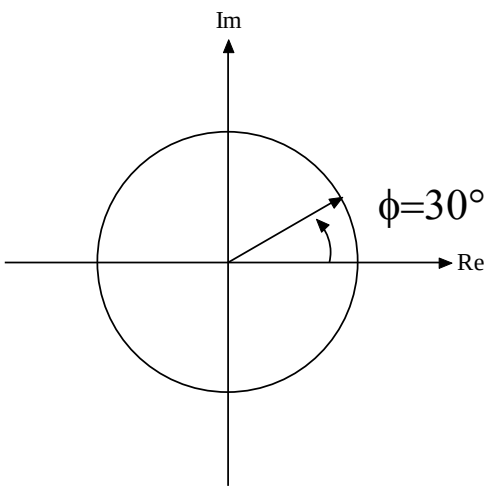

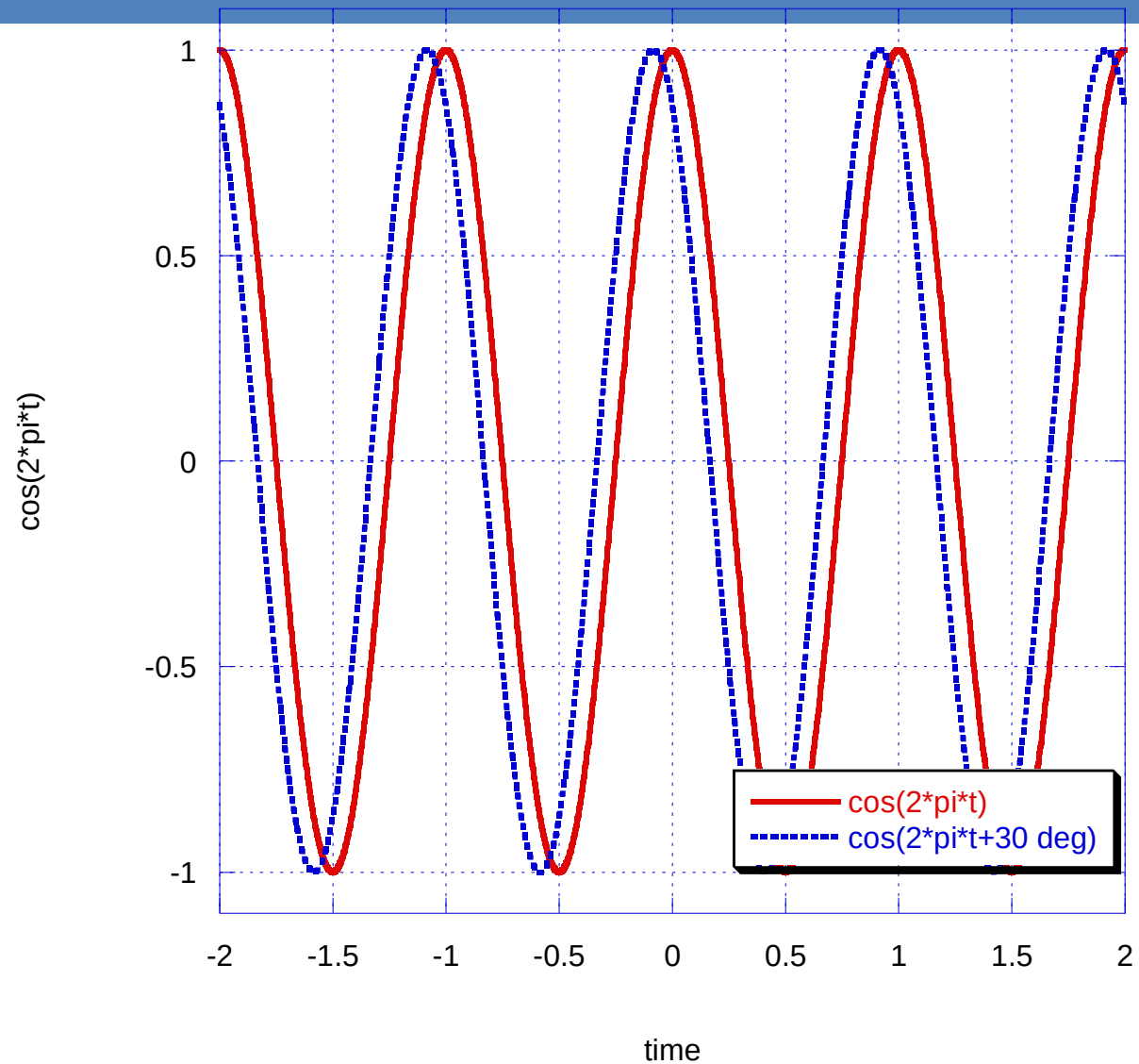

Phase/Phasor Plot: ϕ=-60°=-π/3 Signal Delayed or Retarded

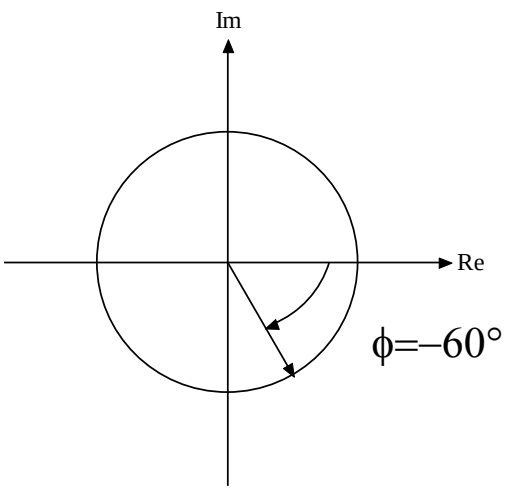

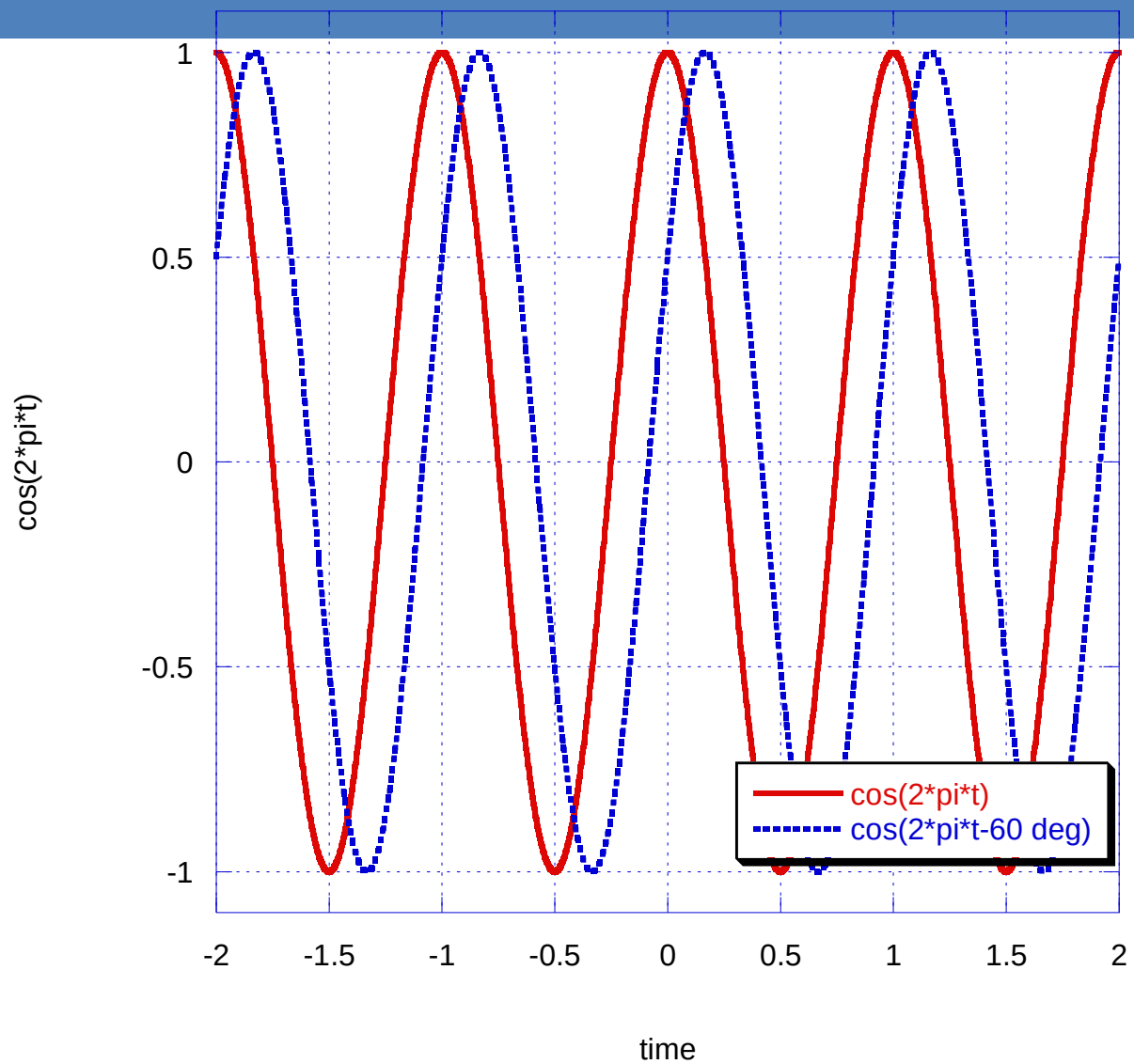

Capacitor in jω-Domain

$$i_c = C\frac{dV_c}{dt}$$

$$V_c = |V_c| e^{j\omega t}$$

$$i_c = (j\omega C)V_c = \left(\omega C e^{j\pi/2}\right)V_c \quad \text{Current leads voltage by} \quad 2\pi/$$

$$Z_c = \left(\frac{1}{j\omega C}\right) \textbf{\textit{Impedance}}\,(\Omega)$$

$$Y_c = (j\omega C)\ \textbf{\textit{Admittance}}\,(\Omega^{-1} = S)$$

$$Z_c \to \infty \text{ as } \omega \to 0 \quad \textit{Capacitor acts like open at DC}$$

$$Z_c \to 0 \text{ as } \omega \to \infty \quad \textit{Capacitor acts like short at High Frequency}$$

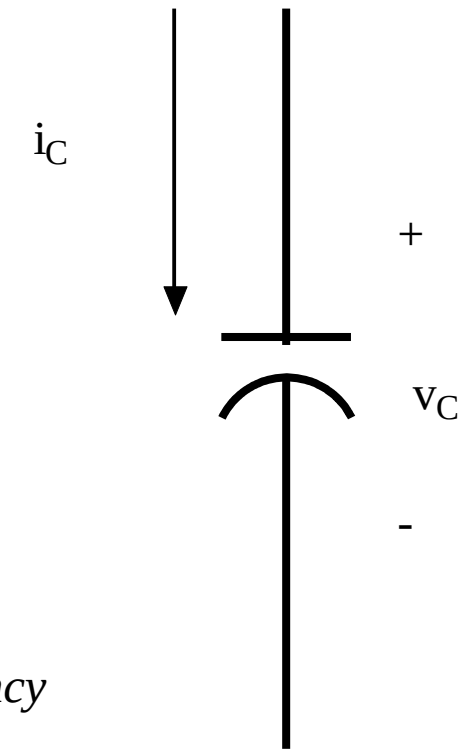

Inductor in jω -Domain

$$V_L = L\frac{di_L}{dt}$$

$$i_L = |i_L| e^{j\omega t}$$

$$V_L = (j\omega L) i_L = \left(\omega L e^{j\pi/2}\right) i_L \quad \text{Voltage leads current by } \pi/2$$

$$Z_L = (j\omega L)\ \textbf{\textit{Impedance}}\ (\Omega)$$

$$Y_L = \left(\frac{1}{j\omega L}\right)\ \textbf{\textit{Admittance}}\ (\Omega^{-1} = S)$$

$$Z_L \to 0 \text{ as } \omega \to 0 \quad \textit{Inductor acts like short at DC}$$

$$Z_L \to \infty \text{ as } \omega \to \infty \quad \textit{Inductor acts like open at High Frequency}$$

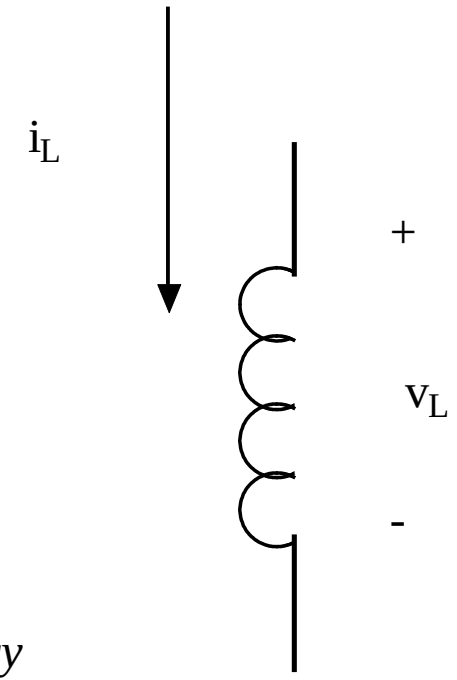

AC Steady State Analysis Outline

- Treat Sinusoidal Signals as Complex Exponentials
- Analyze Circuit Response Using Nodal, Mesh, *Whatever* Using Complex Impedances
- Find Desired Responses in Complex Form
- Take the Real Part to Get Physical Result
- *Wonderful Thing Is That This Approach Is Easier*
- KCL, KVL, and Derived Impedance Combinations Rules (Series, Parallel, Wye-Delta) Work with Complex Impedances

Steady State AC Analysis II

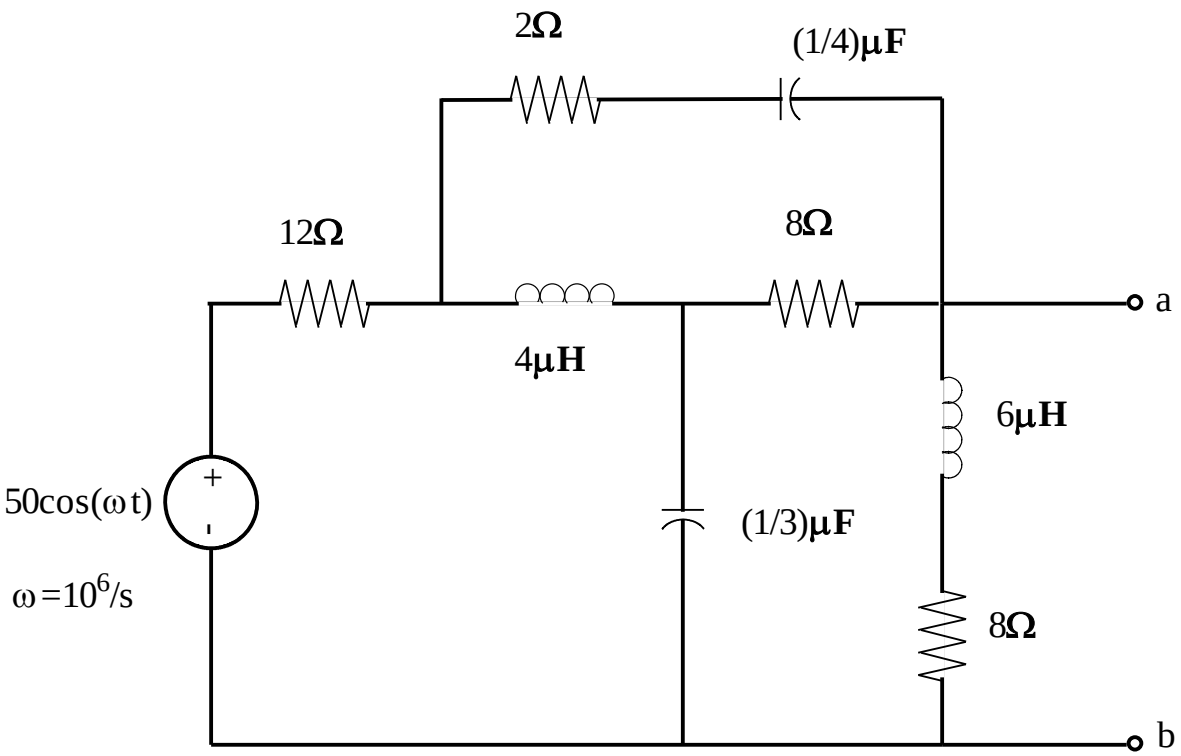

Steady State AC Analysis II

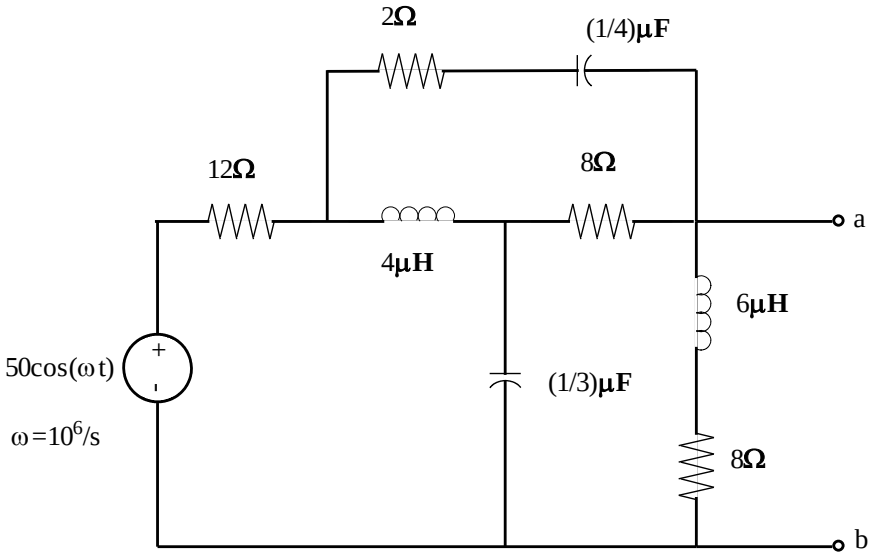

Steady State AC Analysis II

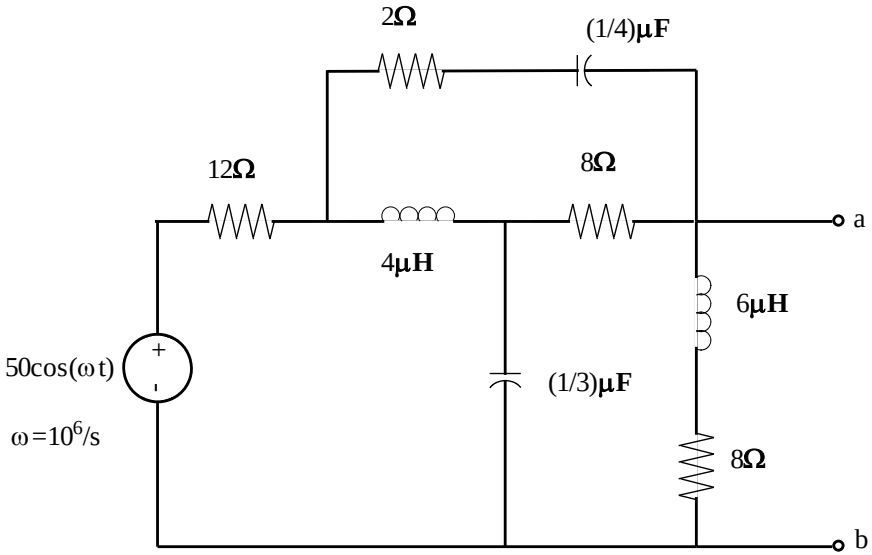

Steady State AC Analysis II

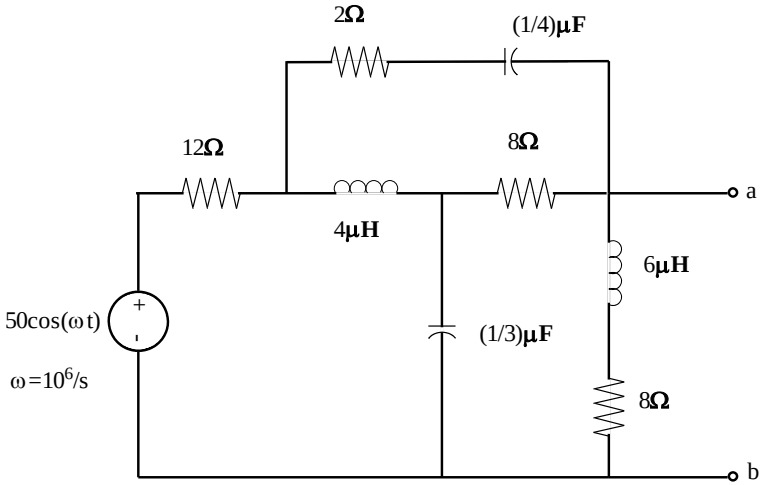

Steady State AC Analysis II

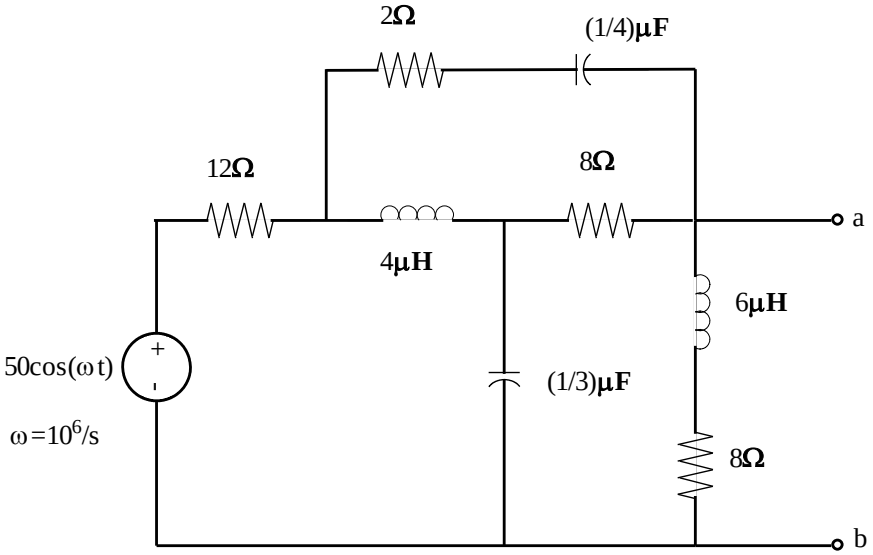

Answers

v1oc =6.1311 + 3.2209i

v2oc =-1.0086 -10.8869i

v3oc =-0.1925 + 0.7030i

VTH =-0.1925 + 0.7030i

Magnitude	Phase(r)	Phase(degrees)
0.7289	1.8381	105.3167

v1sc =6.1422 + 3.2570i

v2sc =-1.1600 -11.5110i

ISC =-0.1822 + 0.1153i

RTH =2.4982 - 2.2783i

Magnitude	Phase(r)	Phase(degrees)
3.3811	-0.7394	-42.3637

Equivalent Circuit Model at $\omega=10^6 s^{-1}$