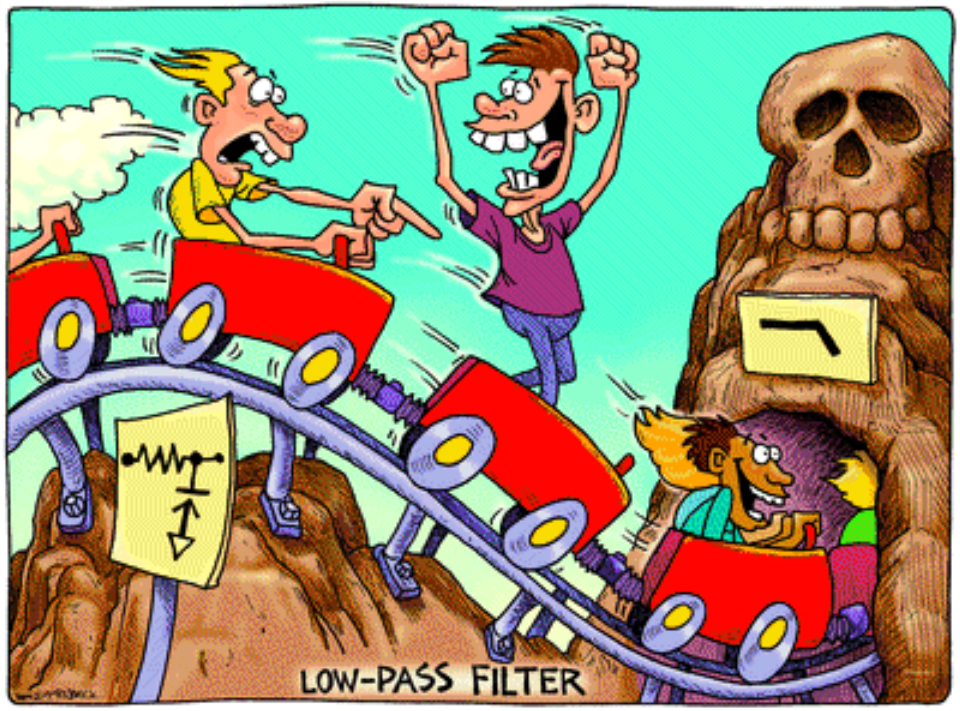

MORE ADVANCED FILTERS

© Fred Terry
Winter, 2010

Improving Filters

- We Cannot Make Perfect Filters Due to Causality (no circuit/system response before signal arrives, EECS 216)
- How Do We Do Better (Better Approximations of Ideal Filters)?
  - Flatter Pass-Band Regions
  - Sharper Cut-off(s)
  - What Phase (Time) Response Do We Want?
- Keys: Complex Poles (Resonance) and High Order Filter Circuits
- Discussion can lead to lots of interesting math→Systems Theory (EECS 216 +)
- We will concentrate on circuits implementations

Filters and Time Delay

- For Most Filters, We Want Signals in the Pass-Band to Propagate Through with the Same Time Delay NOT Constant Phase Delay
- **<u>This Means Linear Phase in the Pass-Band</u>**
- In Real Systems, Δt_p can be +/- But Δt_g is always Positive.
- Group Delay Measures The Delay of Information Transmission Through a System
- Δt_p is easier to calculate and if $\phi \rightarrow 0$ an ~constant Δt_p yields an ~constant Δt_g

$$V_o(t) = |H(\omega)||V_g|\cos(\omega t + \phi)$$

$$\phi = \angle H(\omega)$$

$$V_o(t) = |H(\omega)||V_g|\cos\left[\omega\left(t + \frac{\phi}{\omega}\right)\right]$$

$$= |H(\omega)||V_g|\cos\left[\omega\left(t - \Delta t_p\right)\right]$$

$$\phi = \omega \Delta t_p$$

$$\Delta t_p = -\frac{\phi}{\omega}$$ **Phase Delay**

$$\Delta t_g = -\frac{\partial \phi}{\partial \omega}$$ **Group Delay**

Example First Order Filters

Low Pass Filter

$$H(s)=\frac{1}{1+s\tau}=\frac{1}{1+\frac{s}{\omega_c}}=\frac{\omega_c}{\omega_c+s}$$

$$H(\omega)=\frac{\omega_c}{\omega_c+j\omega}$$

$$\phi=\measuredangle H(\omega)=-\tan^{-1}(\omega\tau)=-\tan^{-1}\left(\frac{\omega}{\omega_c}\right)$$

$$\Delta t_p=\frac{1}{\omega}\tan^{-1}(\omega\tau)=\frac{1}{\omega}\tan^{-1}\left(\frac{\omega}{\omega_c}\right)$$

$$\Delta t_g=\frac{\tau}{1+(\omega\tau)^2}=\frac{\omega_c}{\omega_c^2+\omega^2}$$

High Pass Filter

$$H(s)=\frac{s\tau}{1+s\tau}=\frac{\frac{s}{\omega_c}}{1+\frac{s}{\omega_c}}=\frac{s}{\omega_c+s}$$

$$H(\omega)=\frac{j\omega}{\omega_c+j\omega}$$

$$\phi=\measuredangle H(\omega)=\frac{\pi}{2}-\tan^{-1}(\omega\tau)=\frac{\pi}{2}-\tan^{-1}\left(\frac{\omega}{\omega_c}\right)$$

$$\Delta t_p=\frac{1}{\omega}\left[-\frac{\pi}{2}+\tan^{-1}(\omega\tau)\right]=\frac{1}{\omega}\left[-\frac{\pi}{2}+\tan^{-1}\left(\frac{\omega}{\omega_c}\right)\right]$$

$$\Delta t_g=\frac{\tau}{1+(\omega\tau)^2}=\frac{\omega_c}{\omega_c^2+\omega^2}$$

Same Group Delay

LPF $\omega_c = 2\pi(50KHz)$

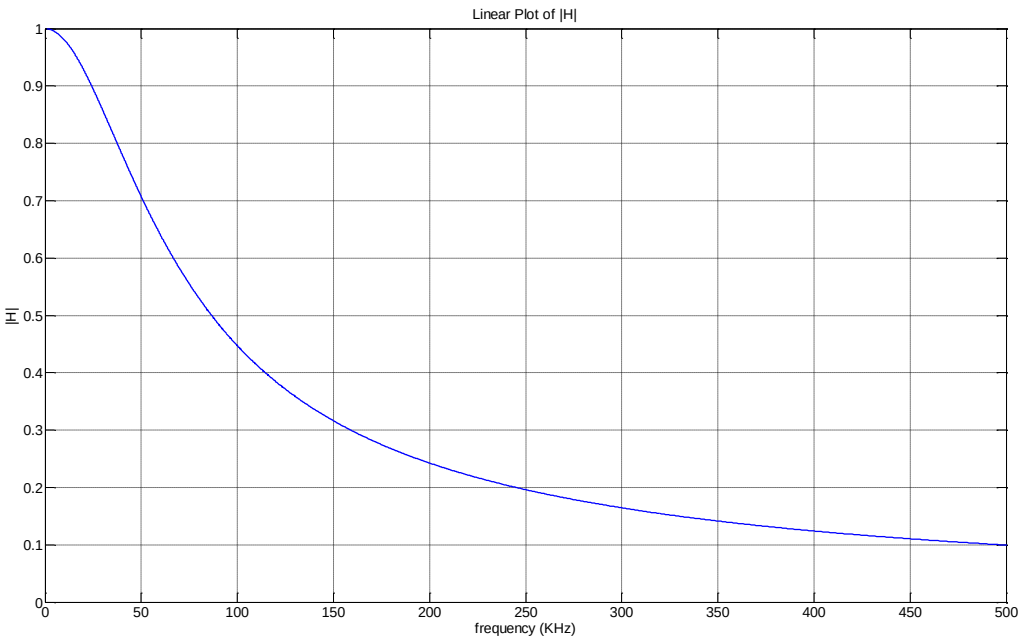

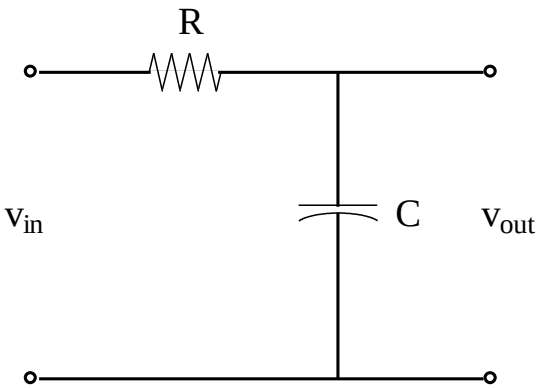

$$H(s) = \frac{1}{1+RCs} = \frac{1}{1+\tau s}$$

$$Here\ \tau = \frac{1}{2\pi(50KHz)} \approx 3.18\mu s$$

Single Pole LPF $\omega_c = 2\pi(50\text{KHz})$

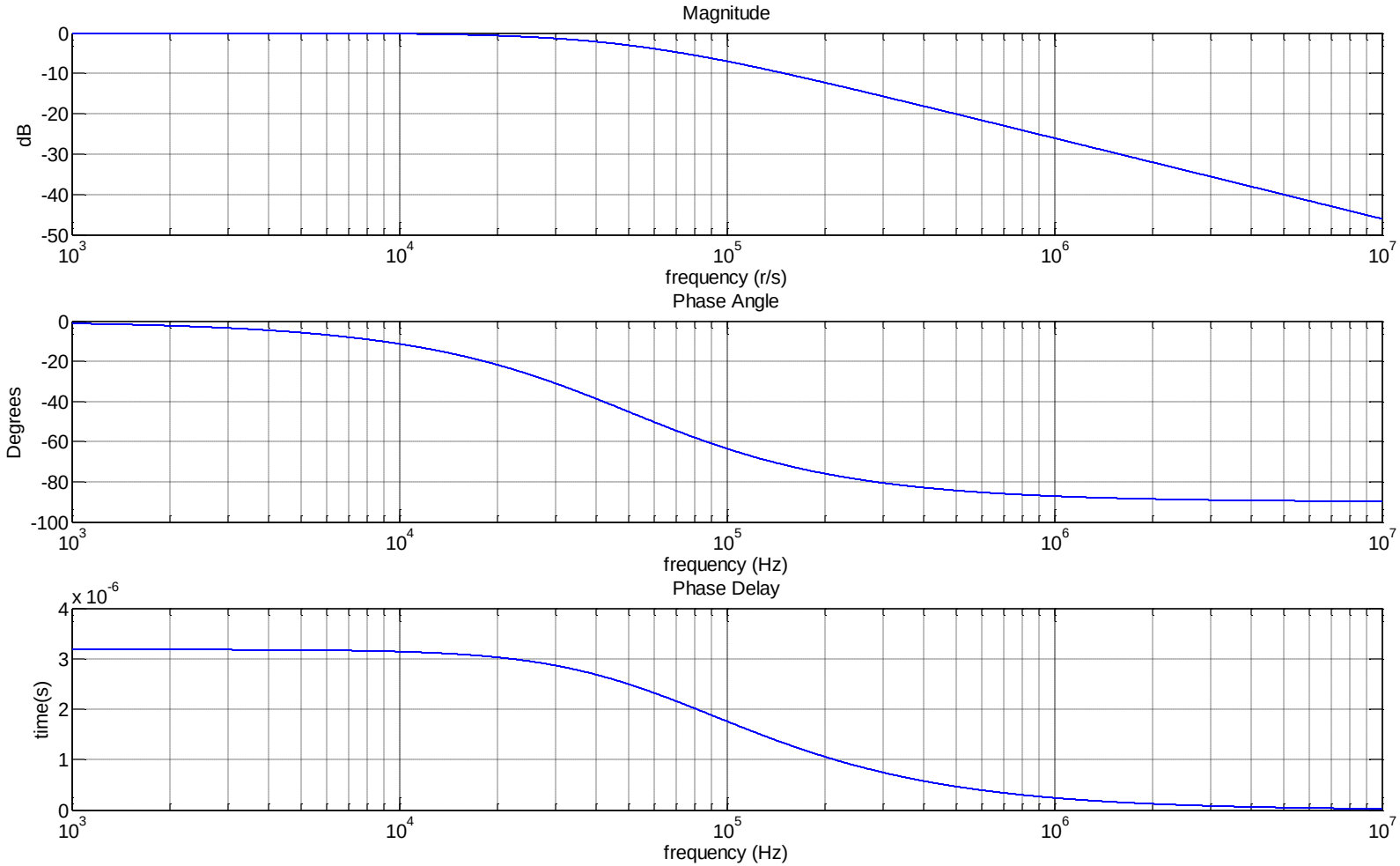

Resonance

- Any Sharp Feature in a Response Function Is Often Called Resonance
- In a series or parallel RLC Circuit, Resonance Occurs when the Capacitive and Inductive Impedances Are Equal in Magnitude Resulting a Purely Resistive Impedance (phase = 0)
  - In general RLC networks, the phase = 0 definition may or may not be useful
- At Resonance, the Capacitor and Inductor Exchange Energy with Each Other with relatively little power dissipation in the rest of the circuit
- Key to sharp filters→ strong resonance → low energy loss per cycle →high Q

Series Resonance

What is Z(s), $H(s)=V_0/V_g$

What Kind of Filter is this?

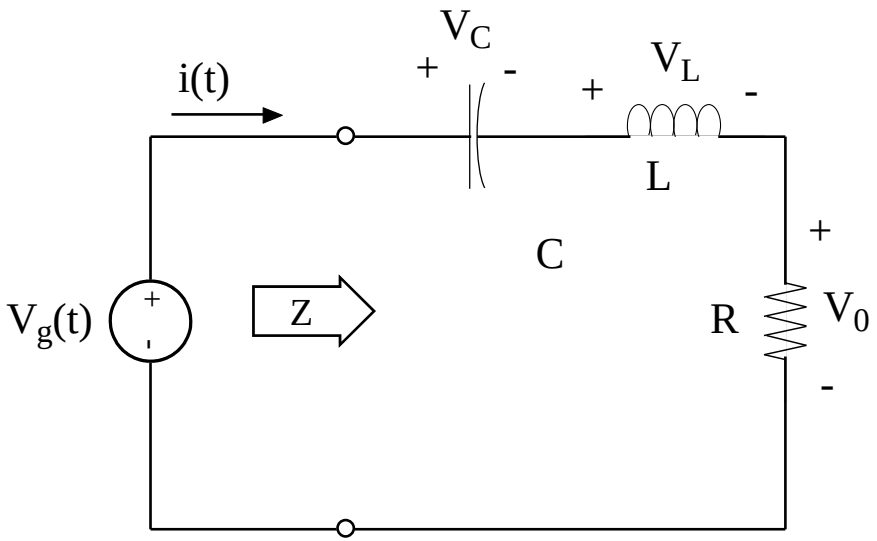

Series Resonance

At Resonance ($\omega=\omega_n$), the *Series* Condition Yields $V_C(t)+V_L(t)=0$

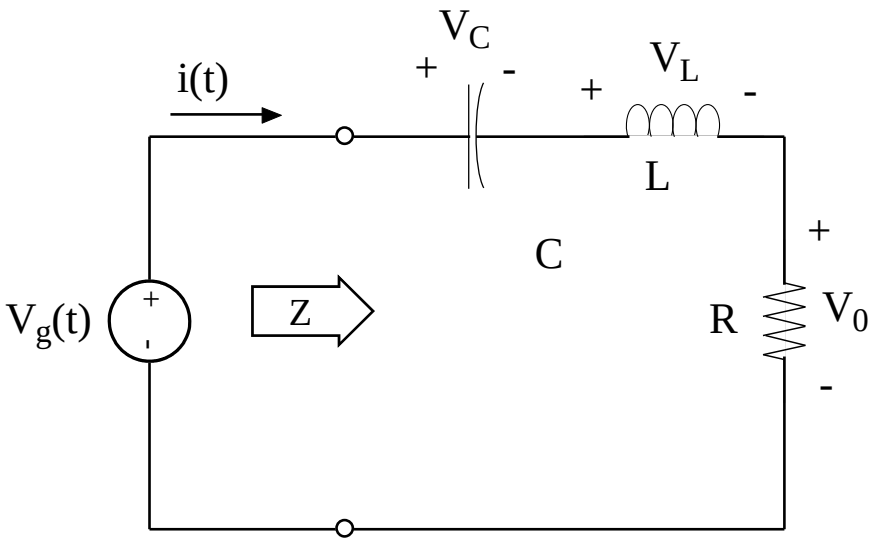

Power and Bandwidth

Since we have a resistor (V&I in phase), we can find the ½ power points by find ω's for which:

$$\left|V_0(\omega_{1,2})\right| = \frac{1}{\sqrt{2}}\left|V_0(\omega_n)\right| = \frac{1}{\sqrt{2}}\left|V_g(\omega_n)\right|$$

$$H(s) = \frac{R}{R + Ls + \frac{1}{Cs}}$$

$$= \frac{RCs}{LCs^2 + RCs + 1}$$

$$= \frac{s\left(R/L\right)}{s^2 + s\left(R/L\right) + 1/LC}$$

$$= \frac{2\alpha s}{s^2 + 2\alpha s + \omega_n^2}$$

$$H(\omega) = \left[\frac{jRC\omega}{\left(1 - LC\omega^2\right) + jRC\omega}\right] = \frac{1}{-\frac{j}{R}\left(\frac{1}{\omega C} - L\omega\right) + 1}$$

$$\left|H(\omega_{1,2})\right| = \frac{1}{\sqrt{2}} \rightarrow \left|-\frac{j}{R}\left(\frac{1}{\omega C} - L\omega\right) + 1\right| = \sqrt{2}$$

$$\rightarrow \frac{1}{R^2}\left(\frac{1}{\omega C} - L\omega\right)^2 + 1 = 2$$

$$\rightarrow \omega_1 = -\frac{R}{2L} + \left[\left(\frac{R}{2L}\right)^2 + \frac{1}{LC}\right]^{1/2} = -\alpha + \left[\alpha^2 + \omega_n^2\right]^{1/2}$$

$$\rightarrow \omega_2 = \frac{R}{2L} + \left[\left(\frac{R}{2L}\right)^2 + \frac{1}{LC}\right]^{1/2} = \alpha + \left[\alpha^2 + \omega_n^2\right]^{1/2}$$

$$\omega_n = \sqrt{\omega_1\omega_2}$$

$$B = \omega_2 - \omega_1$$

Power and Bandwidth: 2nd Order Bandpass General Derivation

$$H(s) = \frac{2\alpha s}{s^2 + 2\alpha s + \omega_n^2}$$

$$H(\omega) = \frac{2j\alpha\omega}{\omega_n^2 - \omega^2 + 2j\alpha\omega}$$

$$\left|H(\omega_{1,2})\right|^2 = \frac{4\alpha^2\omega^2}{\left(\omega_n^2 - \omega^2\right)^2 + 4\alpha^2\omega^2} = \frac{1}{2}$$

$$4\alpha^2\omega^2 = \frac{1}{2}\left[\left(\omega_n^2 - \omega^2\right)^2 + 4\alpha^2\omega^2\right]$$

$$0 = \omega^4 - 2\left(2\alpha^2 + \omega_n^2\right)\omega^2 + \omega_n^4$$

quadratic in ω^2

$$\omega^2 = \left(2\alpha^2 + \omega_n^2\right) \pm \left(4\alpha^4 + 4\alpha^2\omega_n^2\right)^{1/2}$$

$$= \left(2\alpha^2 + \omega_n^2\right) \pm 2\alpha\left(\alpha^2 + \omega_n^2\right)^{1/2}$$

$$\omega_{1,2}{}^2 = \left(2\alpha^2 + \omega_n^2\right) \pm 2\alpha\underbrace{\left(\alpha^2 + \omega_n^2\right)^{1/2}}_{\equiv D}$$

$$= \alpha^2 + D^2 \pm 2\alpha D$$

$$\omega_1{}^2 = \alpha^2 - 2\alpha D + D^2$$

$$= \left(\alpha - D\right)^2$$

$$\omega_1 = \pm\left(\alpha - D\right) = -\alpha + \left(\alpha^2 + \omega_n^2\right)^{1/2}$$

similarly

$$\omega_2 = \alpha + D = \alpha + \left(\alpha^2 + \omega_n^2\right)^{1/2}$$

$$B \equiv \omega_2 - \omega_1$$

$$= 2\alpha$$

Q: Quality Factor

$$Q \equiv 2\pi \frac{Peak\ Energy\ Stored\ in\ the\ circuit}{Energy\ Dissipated\ by\ the\ circuit\ in\ one\ period\ at\ \omega_n}$$

$$Series\ RLC:$$

$$Q = \frac{\omega_n L}{R} = \frac{1}{\omega_n CR} = \frac{\omega_n}{2\alpha} = \frac{\omega_n}{B} = \frac{1}{2\zeta}$$

$$B = \frac{\omega_n}{Q}$$

Series Q Derivation & Generalized 2nd Order Bandpass Filter

$$E_{stored,\max} = \frac{1}{2}C\left|V_{c,\max}\right|^2 = \frac{1}{2}L\left|I_{L,\max}\right|^2$$

$$I_{L,\max} = \left|V_g\right| / R$$

$$E_{stored,\max} = \frac{L\left|V_g\right|^2}{2R^2}$$

$$E_{dis,cycle} = T \cdot P_{ave} = \frac{1}{f}\frac{1}{2}\frac{\left|V_g\right|^2}{R}$$

so

$$Q = 2\pi\frac{E_{stored,\max}}{E_{dis,cycle}} = \frac{2\pi fL}{R} = \frac{\omega L}{R}$$

but $\omega = \omega_n$ *so*

$$Q = \frac{\omega_n L}{R} = \frac{\omega_n}{2\alpha}$$

Generalized 2nd Order Bandpass

$$H(s) = \frac{2\alpha s}{s^2 + 2\alpha s + \omega_n^2}$$

$$H(s) = \frac{(\omega_n / Q)s}{s^2 + (\omega_n / Q)s + \omega_n^2}$$

Example: $\alpha=0.05\omega_n$ $\omega_n=10^3$ r/s Q=10

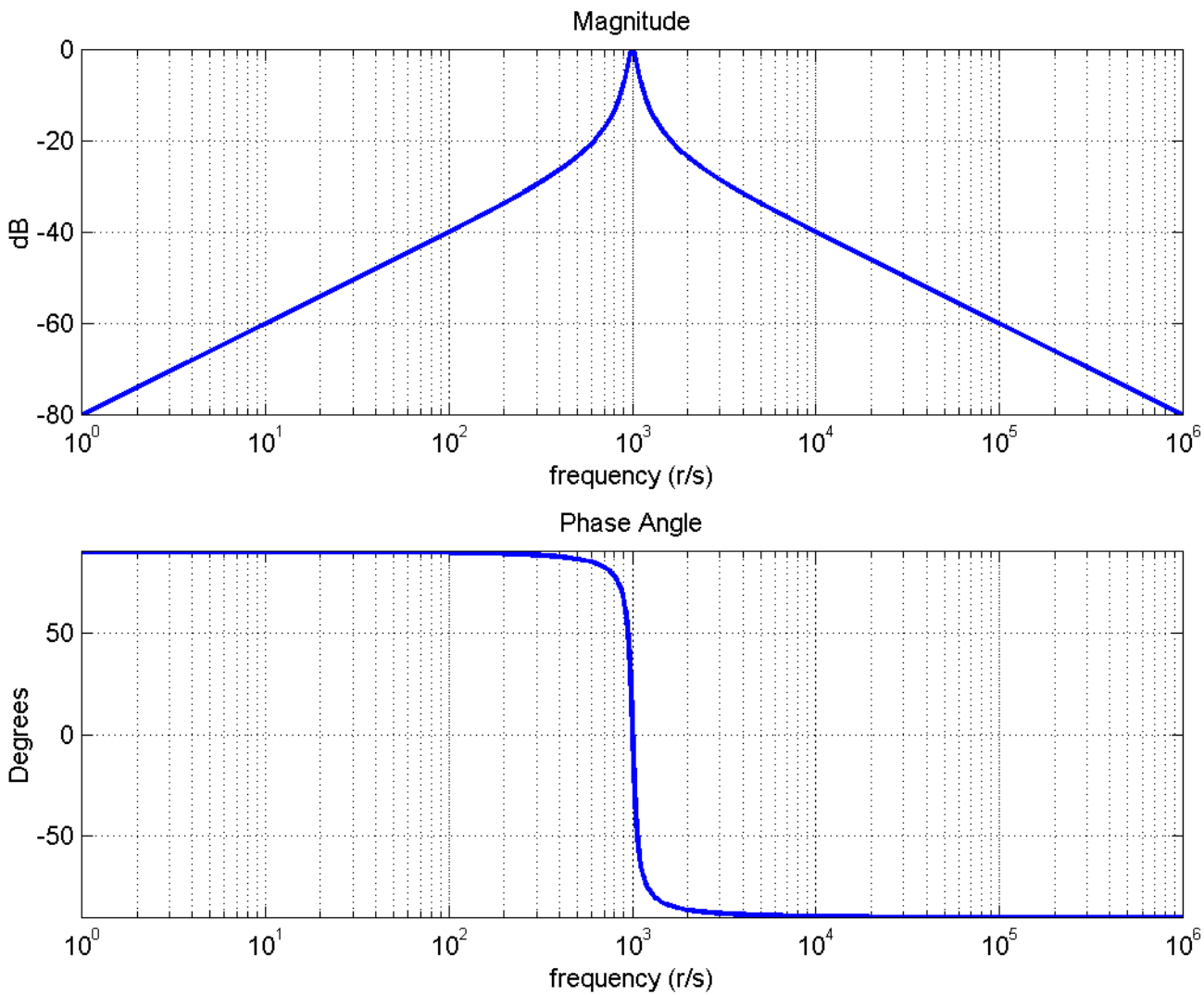

Example: Around ω_n

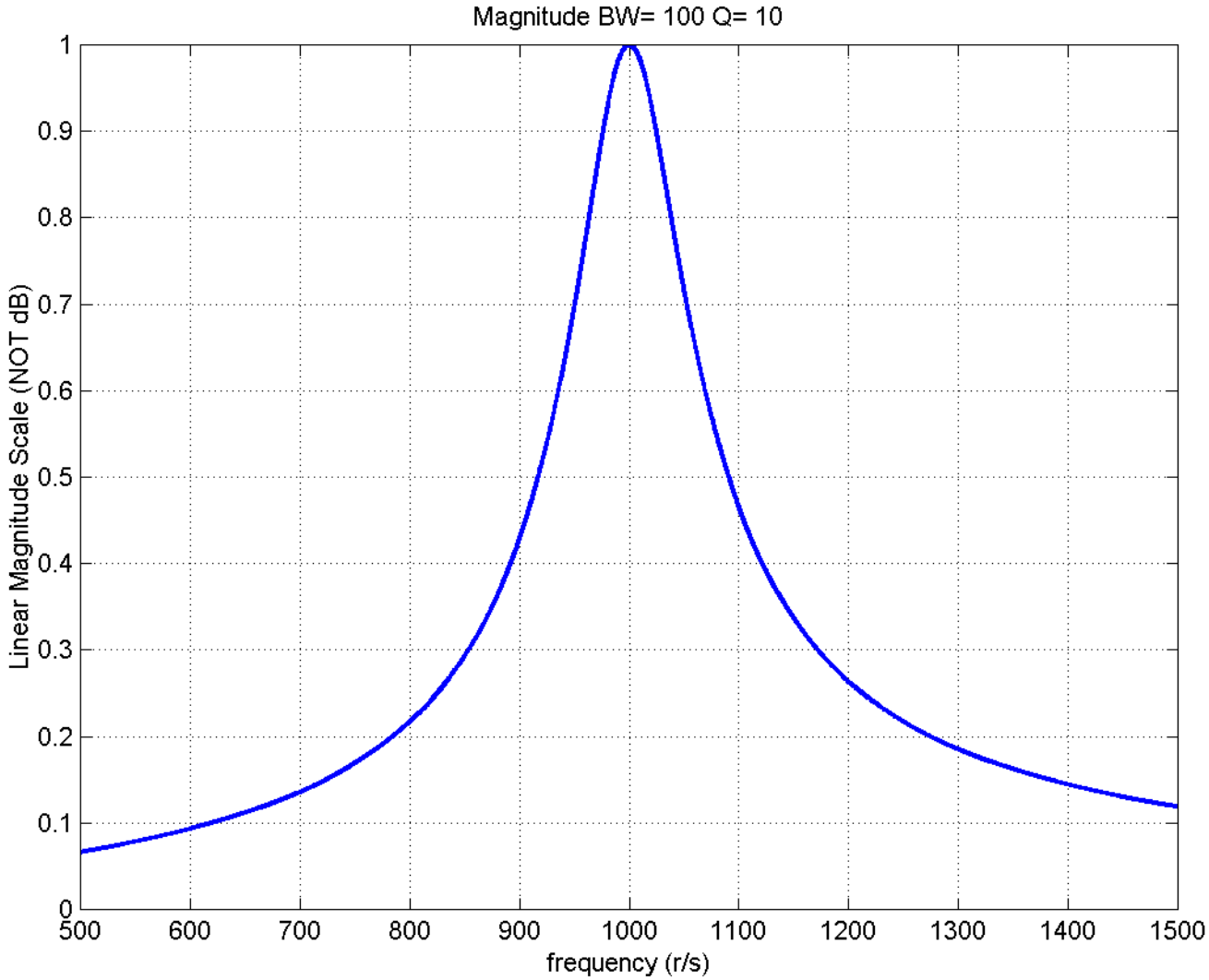

Example: Around ω_n

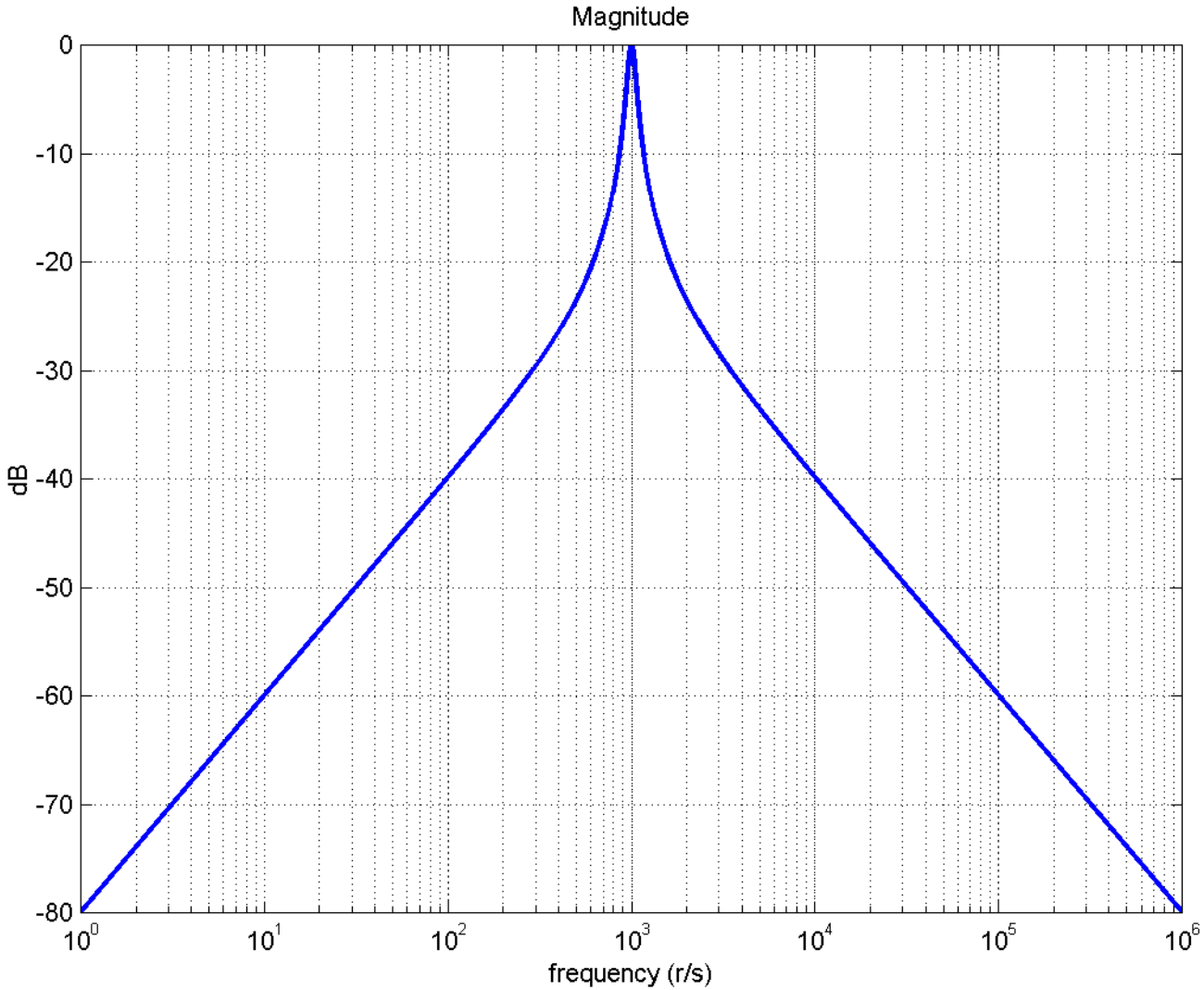

Parallel Resonance

- Look at $H(s)=I_o/I_g$
- Easiest to Look at Admittance Y
- What is $i_1(t)$ at Resonance?

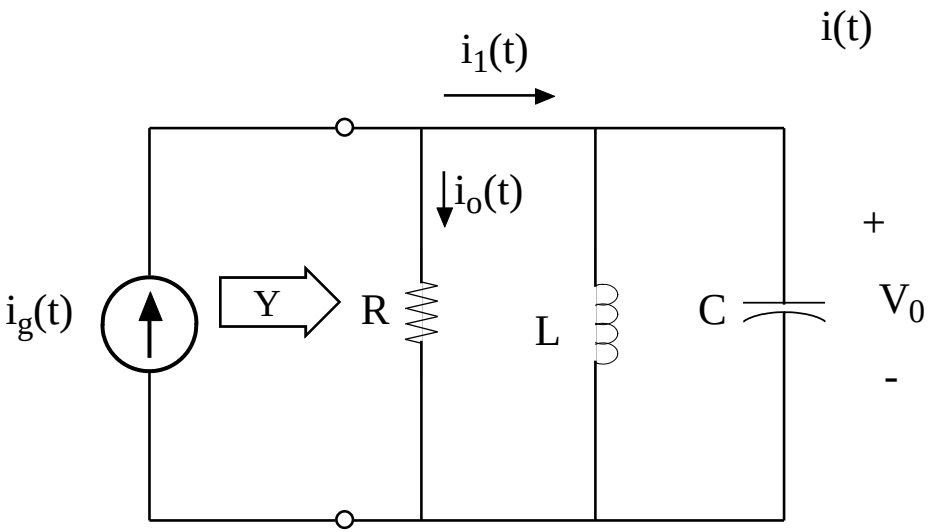

Parallel Resonance: H(ω)

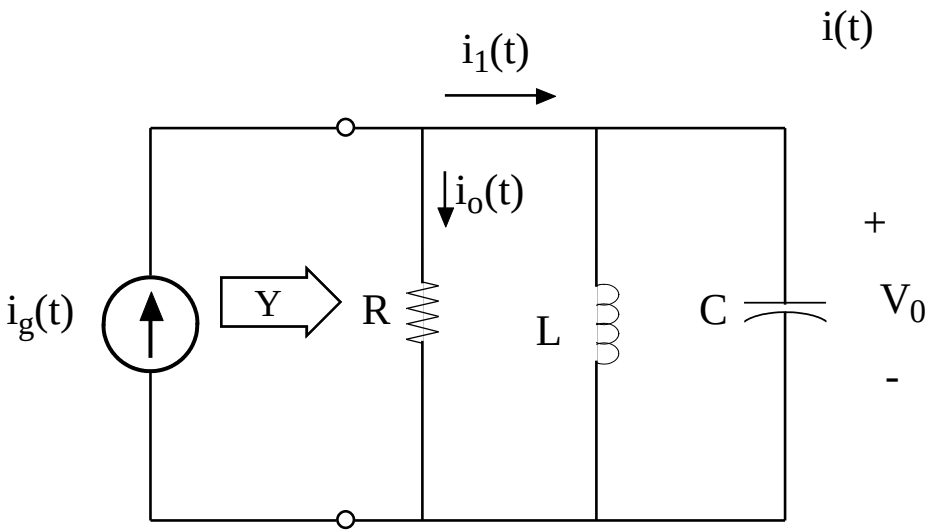

Parallel Resonance: Bandwidth

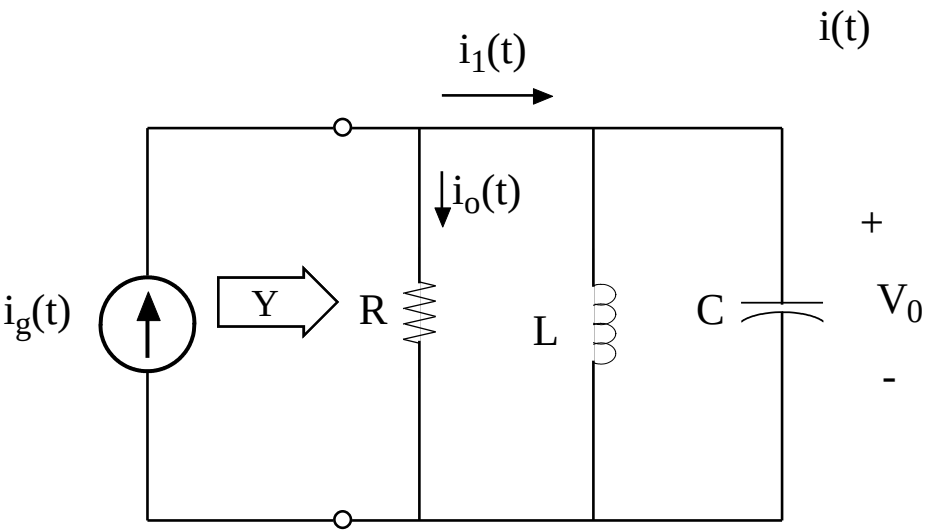

2nd Order Low Pass Filter

- Let's consider a general 2nd order low pass filter (LPF)
- This is a good example of how complex poles can be used to improve circuit performance
  - Energy Exchange Between L&C Peaks-up the response around the cutoff frequency
- We will compare to using simple real poles

Passive Circuit Implementation

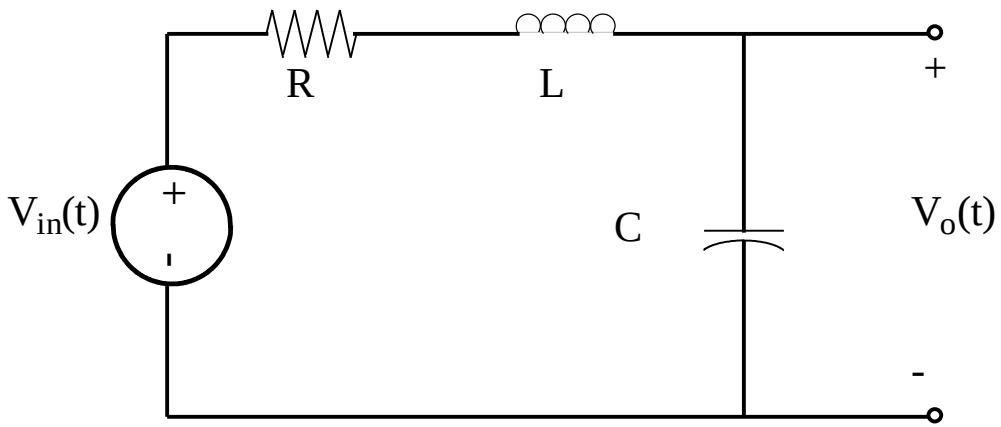

$$H(s) = \frac{1}{LCs^2 + RCs + 1} \qquad H(\omega) = \frac{1}{\left(1 - LC\omega^2\right) + j\omega RC}$$

Active Implementation: Sallen-Key Filter

Negative Feedback
Causes phase difference
Between C1&C2

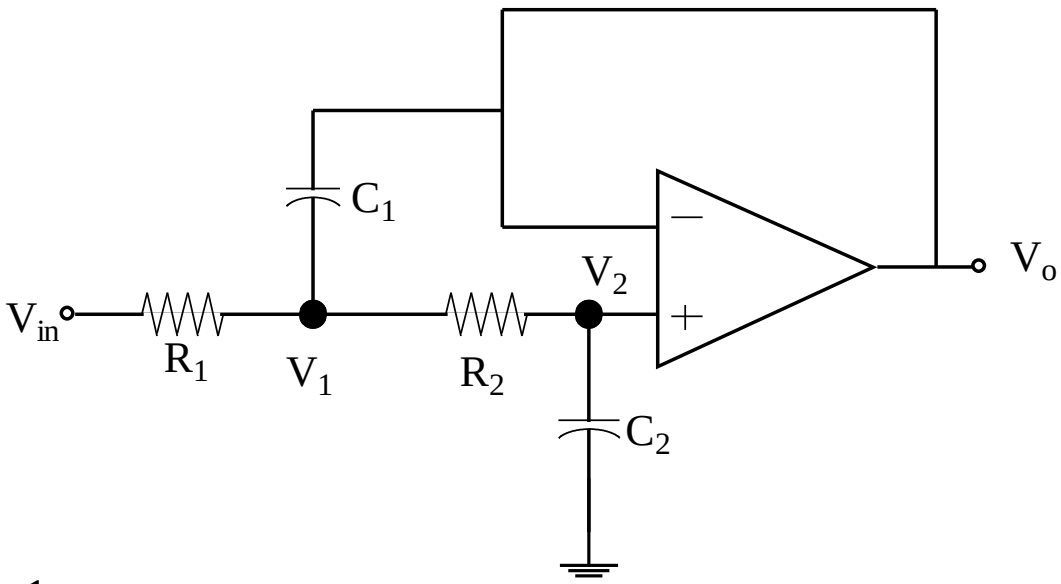

$$H(s) = \frac{1}{(R_1 R_2 C_1 C_2)s^2 + (R_1 + R_2)C_2 s + 1}$$

$$\omega_c = \left[\frac{1}{R_1 R_2 C_1 C_2}\right]^{1/2} \qquad \alpha = \left(\frac{R_1 + R_2}{2R_1 R_2 C_1}\right)$$

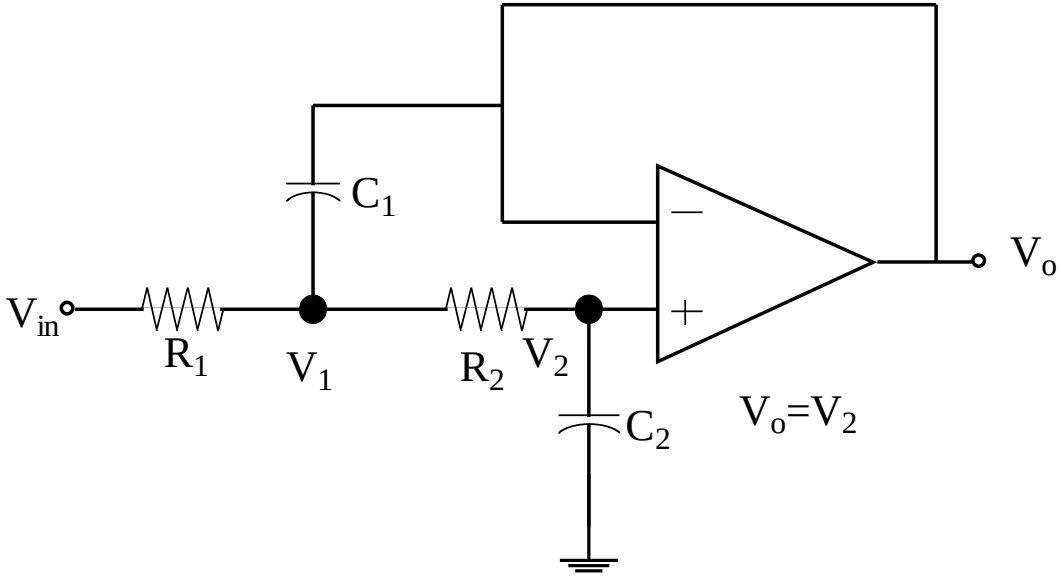

Negative Feedback
Causes phase difference
Between C1&C2

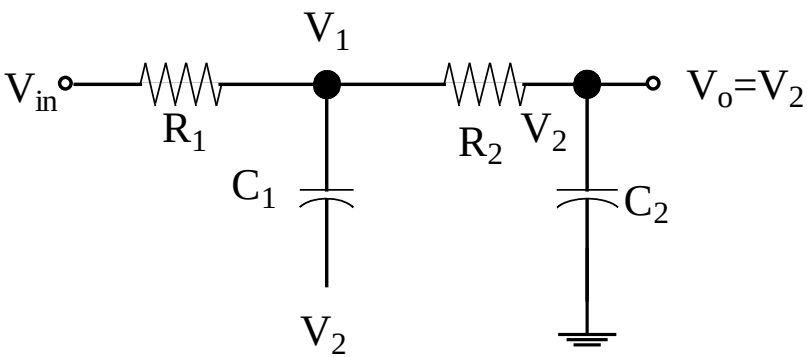

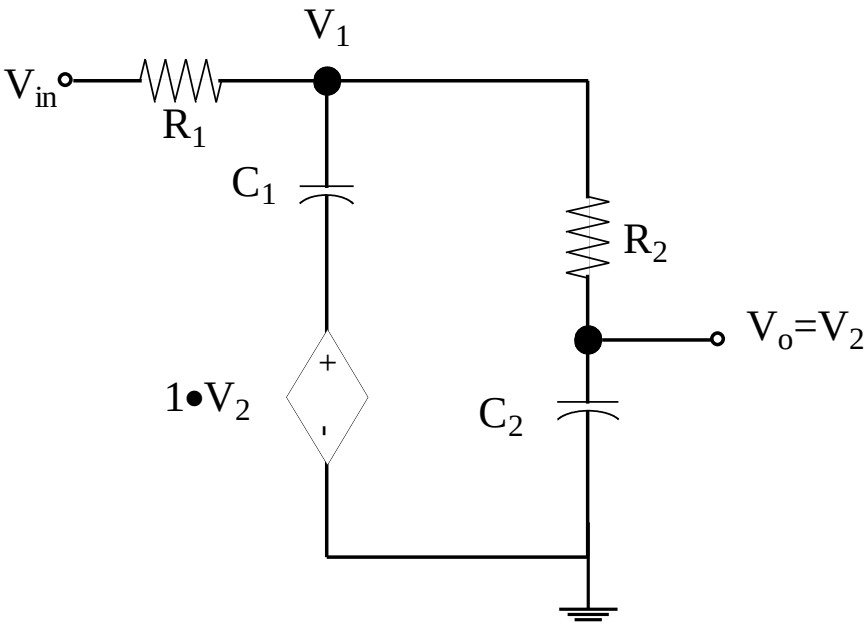

Phase Issues

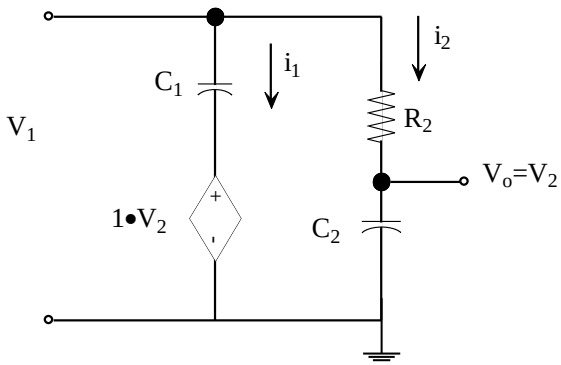

i_1 leads i_2 by +90°

v_{c1} leads v_{c2} by +90°

$P_1=i_1v_{c1}$ is 180° out of phase with $P_2=i_2v_{c2}$ just like an L-C Circuit!

When one element is storing power the other is supplying it.

$$V_2 = V_{C2} = \left(\frac{1}{sR_2C_2+1}\right)V_1$$

$$V_{C1} = V_1 - V_2 = \left(\frac{sR_2C_2}{sR_2C_2+1}\right)V_1$$

$$\left(\frac{V_{C1}}{V_{C2}}\right) = sR_2C_2 \rightarrow j\omega R_2C_2$$

$$i_{c1} = sC_1V_{C1} = \left(\frac{s^2R_2C_1C_2}{sR_2C_2+1}\right)V_1$$

$$i_{c2} = sC_2V_{C2} = \left(\frac{sC_2}{sR_2C_2+1}\right)V_1$$

$$\left(\frac{i_{c1}}{i_{c2}}\right) = sR_2C_1 \rightarrow j\omega R_2C_1$$

General 2nd Order Low Pass Filter

Unity Gain 2nd Order LPF

$$H(s) = \frac{\omega_c^2}{s^2 + 2\alpha s + \omega_c^2}$$

$$= \frac{1}{\left(\frac{s}{\omega_c}\right)^2 + \frac{2\alpha}{\omega_c^2} s + 1}$$

$$= \frac{1}{\left(\frac{s}{\omega_c}\right)^2 + \left(\frac{2\zeta}{\omega_c}\right) s + 1}$$

$$\zeta \equiv \frac{\alpha}{\omega_c} \quad \text{Damping Ratio}$$

$$H(\omega) = \frac{1}{1 - \left(\frac{\omega}{\omega_c}\right)^2 + j\left(\frac{2\omega\zeta}{\omega_c}\right)}$$

ω_c = cut-off or corner frequency

If $\alpha < \omega_c$ $(\zeta < 1)$ we have complex poles in conjugate pairs

$$p_{1,2} = -\alpha \pm j\left[\omega_c^2 - \alpha^2\right]^{1/2} = -\alpha \pm j\omega_d$$

$$p_{1,2} = \omega_c\left[-\zeta \pm j\left(1 - \zeta^2\right)^{1/2}\right]$$

$$p_{1,2} = \omega_c e^{\pm j\phi}$$

$$\phi = \tan^{-1}\left(\left(\frac{1-\zeta^2}{\zeta^2}\right)^{1/2}\right) = \tan^{-1}\left(\left(\frac{\omega_c^2 - \alpha^2}{\alpha^2}\right)^{1/2}\right)$$

$$p_1 p_2 = \omega_c^2$$

General 2nd Order Low Pass Filter

$$H(\omega)=\frac{1}{1-\left(\frac{\omega}{\omega_c}\right)^2+j\left(\frac{2\omega\zeta}{\omega_c}\right)}$$

$$\left|H(\omega)\right|=\left\{\left[1-\left(\frac{\omega}{\omega_c}\right)^2\right]^2+\left(\frac{2\omega\zeta}{\omega_c}\right)^2\right\}^{-1/2}$$

$$\left|H(\omega_c)\right|=\frac{\omega_c}{2\omega_c\zeta}=\frac{1}{2\zeta}$$

if $\alpha<\omega_c$ *or equivalently* $\zeta<1$

$$p_{1,2}=-\alpha\pm j\left(\omega_c^2-\alpha^2\right)=\omega_c\left[-\zeta\pm j\left(1-\zeta^2\right)\right]$$

Examples

(1) $\zeta=0.2 \qquad \left|H(\omega_c)\right|=2.5=+7.959dB$

$$p_{1,2}\approx\omega_c\left(-0.2\pm j0.9788\right)\approx\omega_c e^{\pm j(1.7722)}$$

(2) $\zeta=0.5 \qquad \left|H(\omega_c)\right|=1=+0dB$

$$p_{1,2}\approx\omega_c\left(-0.5\pm j0.866\right)\approx\omega_c e^{\pm j(2.094)}$$

(3) $\zeta=\frac{1}{\sqrt{2}} \qquad \left|H(\omega_c)\right|=\frac{1}{\sqrt{2}}=-3.010dB$

$$p_{1,2}=\omega_c\left(-\frac{1}{\sqrt{2}}\pm j\frac{1}{\sqrt{2}}\right)=\omega_c e^{\pm j(3\pi/4)}$$

$\omega_c=2\pi\left(10KHz\right)$ *choosen for example plots*

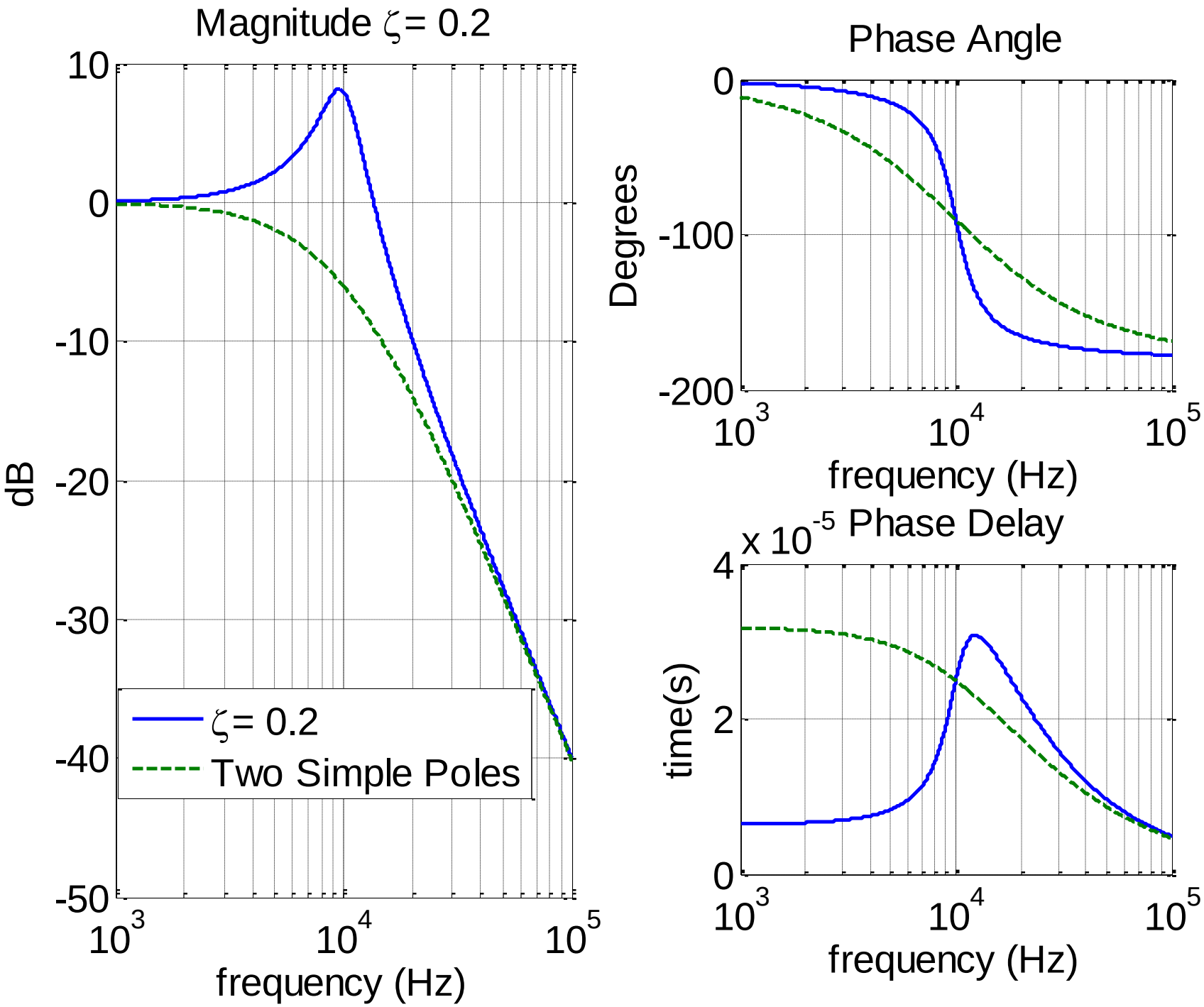
Magnitude ζ= 0.2
dB
10
0
-10
-20
-30
-40
-50
10^3
10^4
10^5
frequency (Hz)
ζ= 0.2
Two Simple Poles
Phase Angle
Degrees
0
-100
-200
10^3
10^4
10^5
frequency (Hz)
x 10^{-5} Phase Delay
time(s)
4
2
0
10^3
10^4
10^5
frequency (Hz)

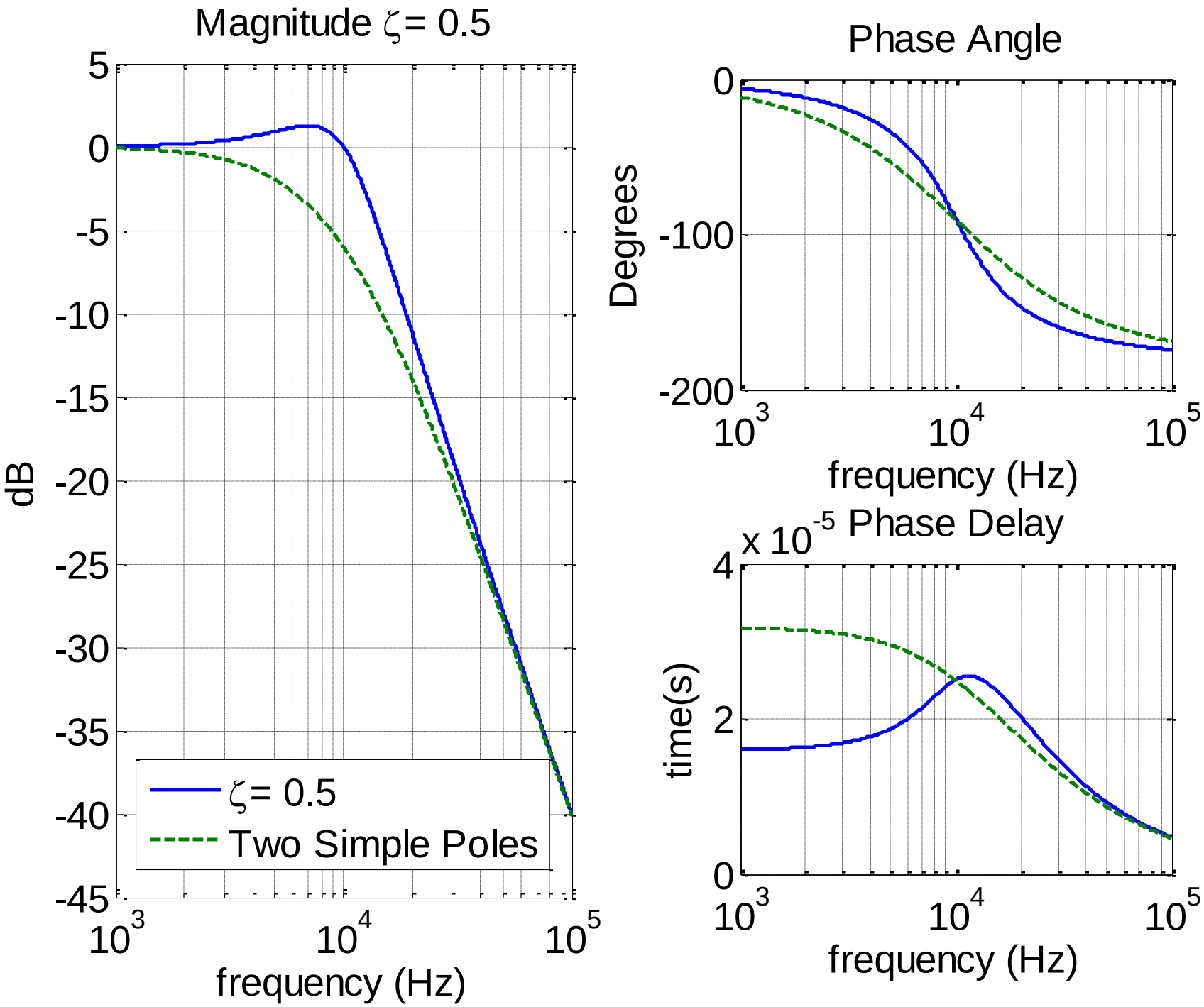
Magnitude ζ= 0.5
dB
5
0
-5
-10
-15
-20
-25
-30
-35
-40
-45
10^3
10^4
10^5
frequency (Hz)
ζ= 0.5
Two Simple Poles
Phase Angle
Degrees
0
-100
-200
10^3
10^4
10^5
frequency (Hz)
x 10^-5 Phase Delay
time(s)
4
2
0
10^3
10^4
10^5
frequency (Hz)

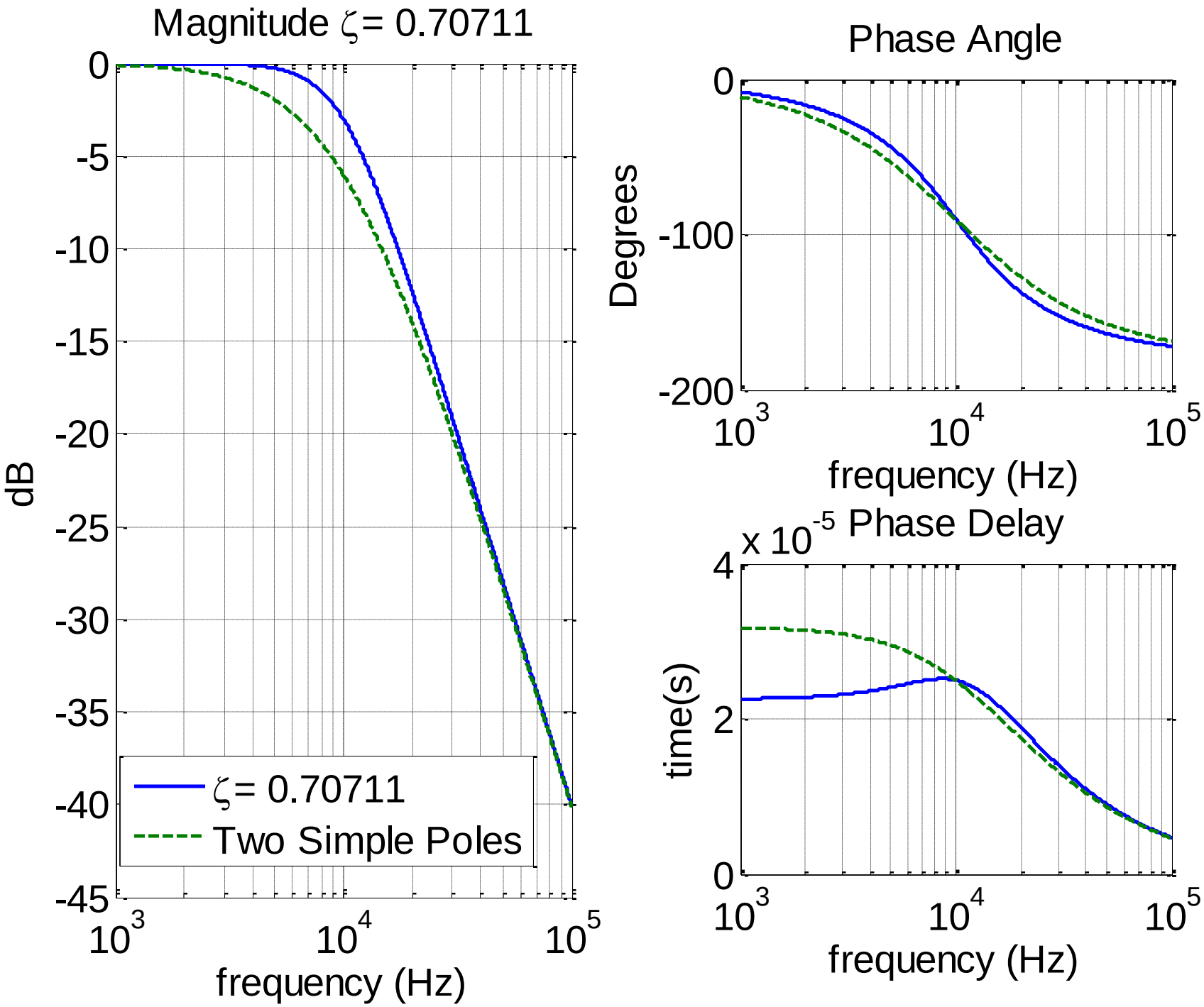
Magnitude ζ= 0.70711
dB
0
-5
-10
-15
-20
-25
-30
-35
-40
-45
10^3
10^4
10^5
frequency (Hz)
ζ= 0.70711
Two Simple Poles
Phase Angle
Degrees
0
-100
-200
10^3
10^4
10^5
frequency (Hz)
x 10^{-5} Phase Delay
time(s)
4
2
0
10^3
10^4
10^5
frequency (Hz)

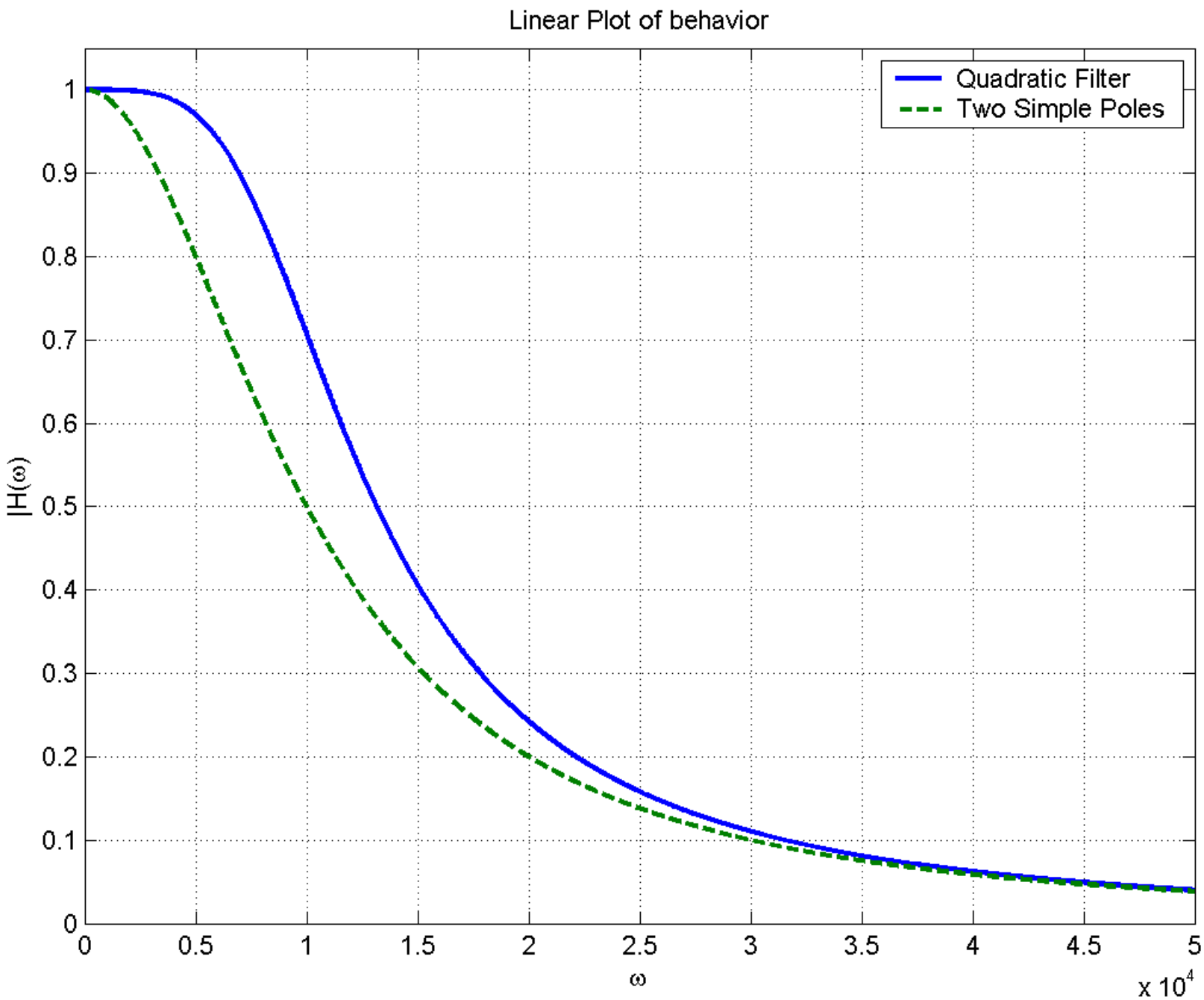
Linear Plot of behavior
Quadratic Filter
Two Simple Poles
|H(ω)
ω
x 10^4
0
0.1
0.2
0.3
0.4
0.5
0.6
0.7
0.8
0.9
1
0
0.5
1
1.5
2
2.5
3
3.5
4
4.5
5

Better Filters

- Optimally Choosen Complex Poles
- Big Topic, Depends on Definition of Optimal: Butterworth, Chebyshev, Elliptic, Bessel, etc.
- <u>Maximally Flat in Pass-Band: Butterworth Filters</u>

$$\left|H(j\omega)\right|^2 = \frac{1}{1+(\omega/\omega_c)^{2n}} = H(j\omega)*H(-j\omega)$$

$$j\omega = s \rightarrow \omega = -js$$

$$H(s)*H(-s) = \frac{1}{1+(-1)^n (s/\omega_c)^{2n}}$$

poles are roots of

$$1+(-1)^n (s/\omega_c)^{2n} = 0 \quad \textit{note there will be } 2n \textit{ Complex Roots}$$

$$H(s) = \prod_{k=1}^{n} \frac{1}{(1-(s/p_k))} \qquad p_k \textit{ poles with } \underline{\textit{negative real part}}$$

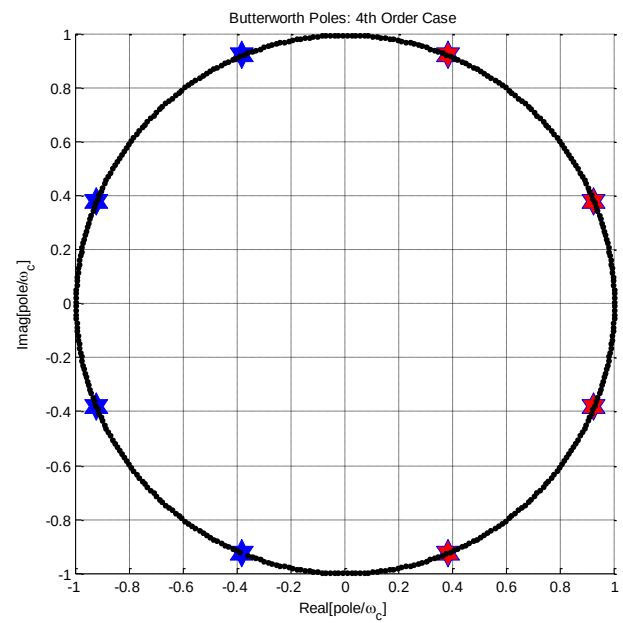

Butterworth Math

$$n = order\ of\ \ filter$$

$$1+(-1)^n (s/\omega_c)^{2n} = 0$$

$$(s/\omega_c)^{2n} = (-1)^{1-n} = \begin{cases} -1 = e^{\pm j\pi}, e^{\pm j3\pi}, e^{\pm j5\pi}, \ldots & n\,even \\ +1 = e^{j0\pi}, e^{\pm j2\pi}, e^{\pm j4\pi}, \ldots & n\,odd \end{cases}$$

$$(s/\omega_c) = \begin{cases} e^{\pm j\pi/2n}, e^{\pm j3\pi/2n}, e^{\pm j5\pi/2n}, \ldots, e^{\pm j\pi(2n-1)/2n} & n\,even \\ 1, e^{\pm j\pi/n}, e^{\pm j2\pi/n}, \ldots, \left(e^{\pm j\pi} = -1\right) & n\,odd \end{cases}$$

Examples

$$\left\{\begin{array}{l} n = 1 \\ (s/\omega_c)^2 = 1 \\ (s/\omega_c) = \pm 1\ simple\ pole \\ (s/\omega_c) = -1\ is\ stable \end{array}\right\}$$

$$\left\{\begin{array}{l} n = 2 \\ (s/\omega_c)^4 = -1 \\ (s/\omega_c) = e^{j\pi/4}, e^{-j\pi/4}, e^{j3\pi/4}, e^{-j3\pi/4} \\ (s/\omega_c) = e^{j3\pi/4}, e^{-j3\pi/4}\ \ stable \end{array}\right\}$$

$$\left\{\begin{array}{l} n = 3 \\ (s/\omega_c)^6 = 1 \\ (s/\omega_c) = 1, -1, e^{j\pi/3}, e^{-j\pi/3}, e^{j2\pi/3}, e^{-j2\pi/3} \\ (s/\omega_c) = -1, e^{j2\pi/3}, e^{-j2\pi/3}\ \ stable \end{array}\right\}$$

$$\left\{\begin{array}{l} n = 4 \\ (s/\omega_c)^8 = -1 \\ (s/\omega_c) = e^{j\pi/8}, e^{-j\pi/8}, e^{j3\pi/8}, e^{-j3\pi/8}, e^{j5\pi/8}, e^{-j5\pi/8}, e^{j7\pi/8}, e^{-j7\pi/8} \\ (s/\omega_c) = e^{j5\pi/8}, e^{-j5\pi/8}, e^{j7\pi/8}, e^{-j7\pi/8}\ \ stable \end{array}\right\}$$

Butterworth Magnitude Response

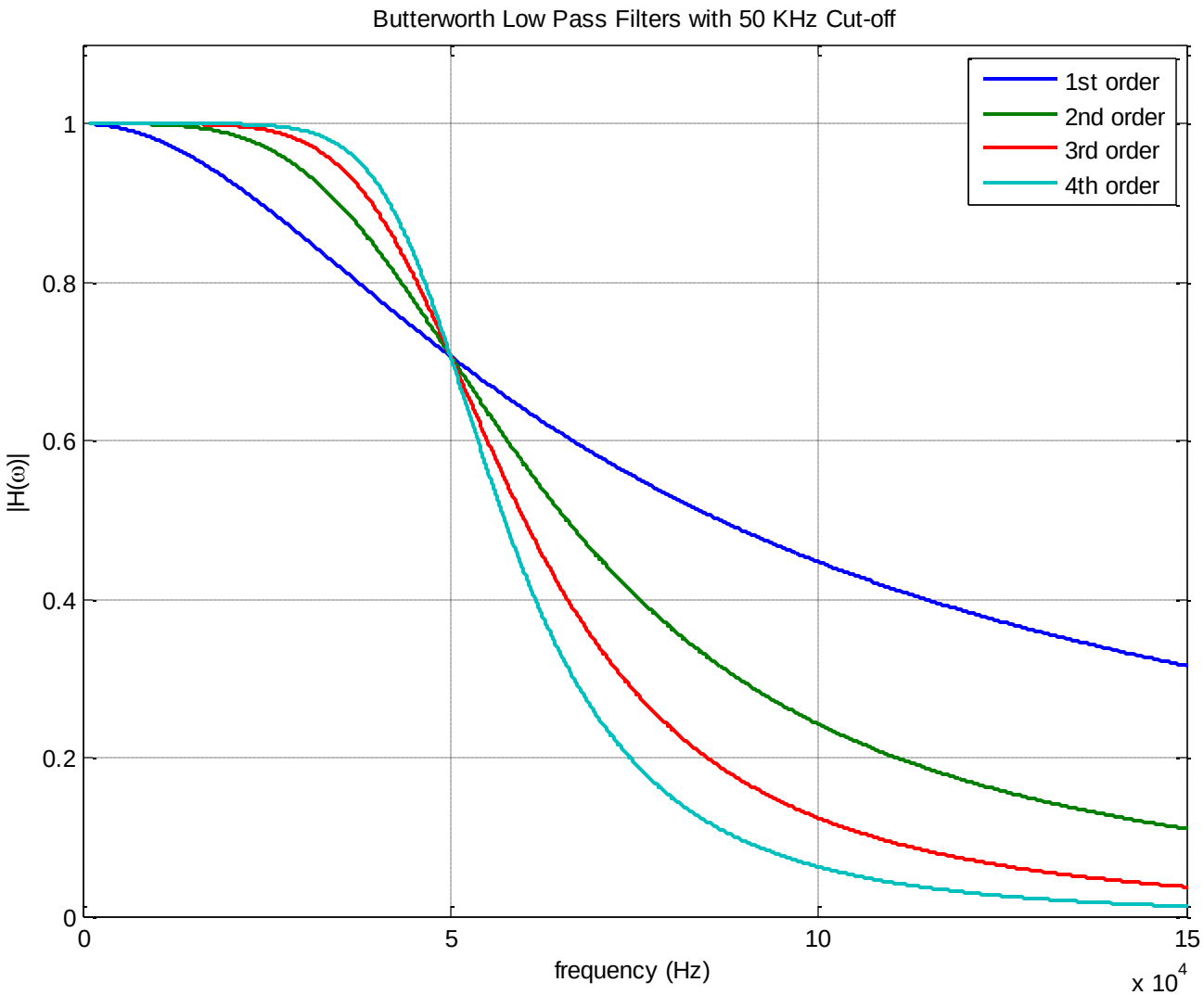

Phase & Delay Response

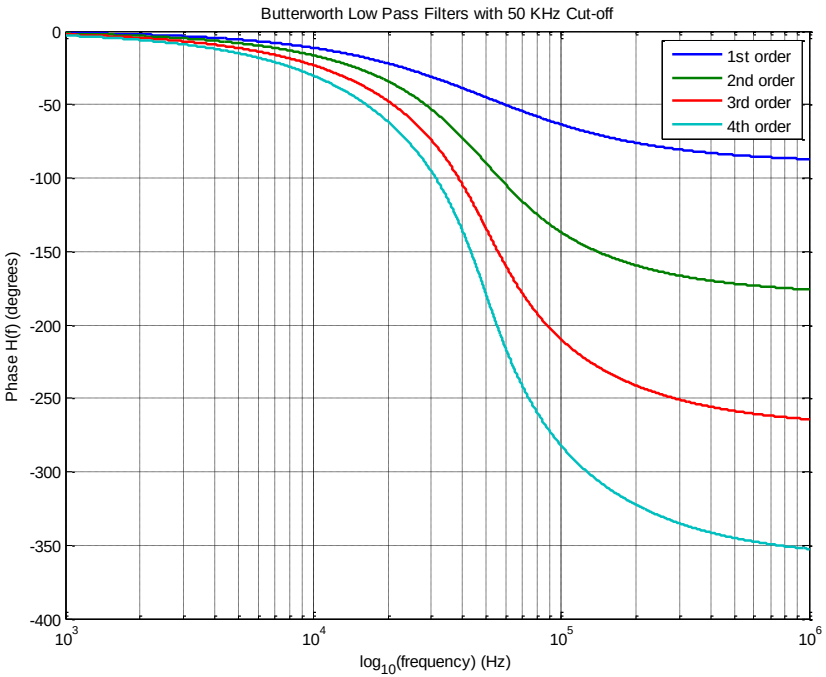

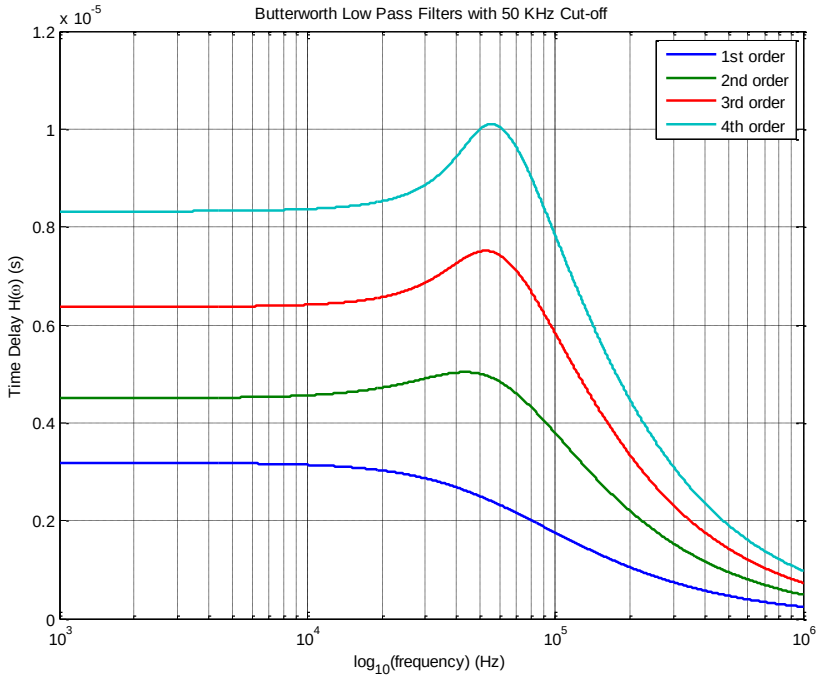

4th Order Tuned Filter Example: 4th Order Butterworth LPF

- Two Quadratic Poles with Tuned Response
- Can Be Realized with Passive RLC or Cascaded Sallen-Key Filters
- Example:

$$H(s) = H_1(s)H_2(s)$$

$$= \left[\frac{\omega_c^2}{s^2 + 2\alpha_1 s + \omega_c^2}\right]\left[\frac{\omega_c^2}{s^2 + 2\alpha_2 s + \omega_c^2}\right]$$

$$= \left[\frac{\omega_c^2}{s^2 + 2\zeta_1\omega_c s + \omega_c^2}\right]\left[\frac{\omega_c^2}{s^2 + 2\zeta_2\omega_c s + \omega_c^2}\right]$$

$$p_{1,2} = \omega_c e^{\pm 5\pi/8} \rightarrow \zeta_1 = -\cos(5\pi/8) \approx 0.382683$$

$$p_{3,4} = \omega_c e^{\pm 7\pi/8} \rightarrow \zeta_2 = -\cos(7\pi/8) \approx 0.923880$$

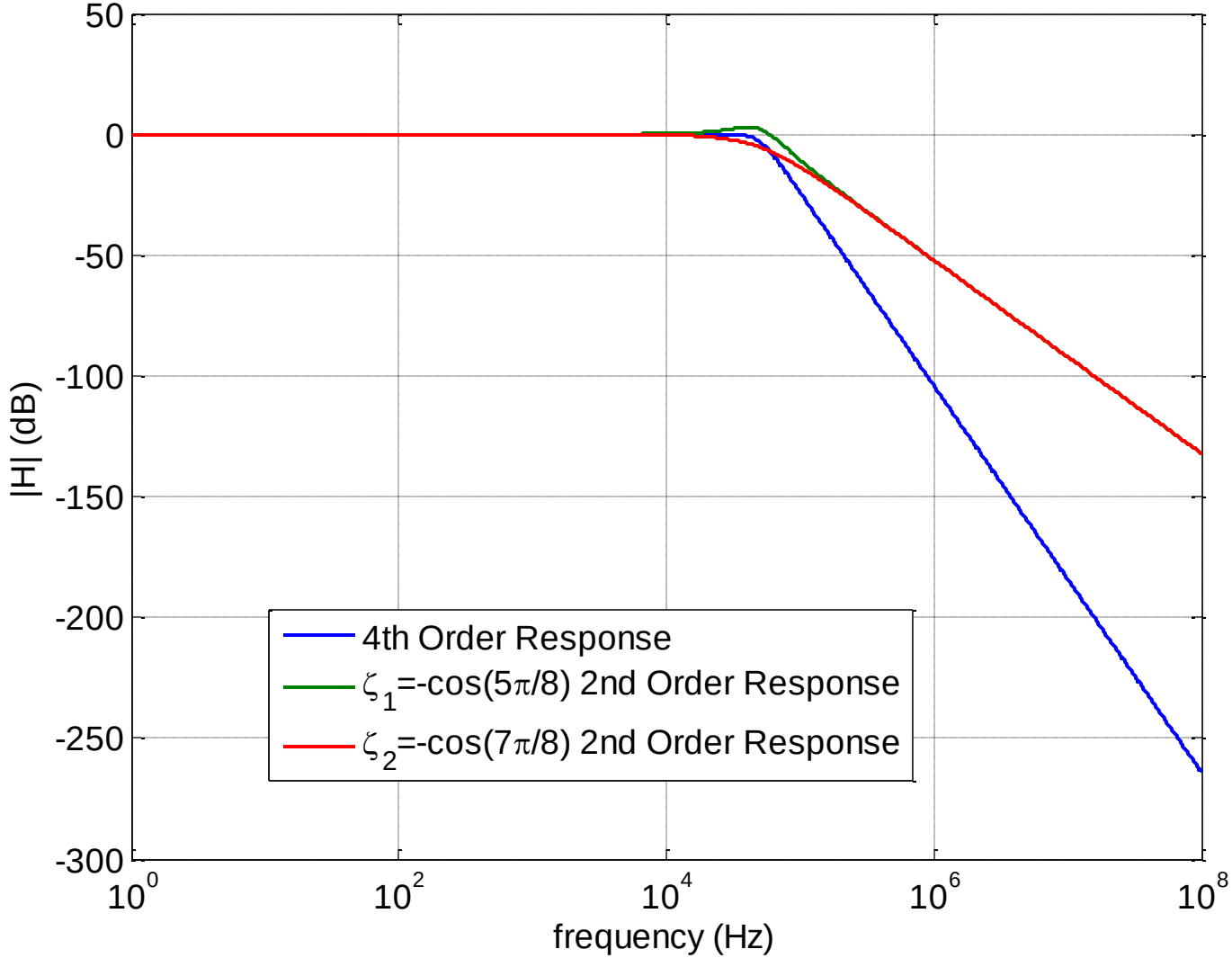
50
0
-50
-100
-150
-200
-250
-300
|H| (dB)
10^0
10^2
10^4
10^6
10^8
frequency (Hz)
4th Order Response
ζ_1=-cos(5π/8) 2nd Order Response
ζ_2=-cos(7π/8) 2nd Order Response

4 Order Butterworth Low Pass Filter: Nodal Analysis

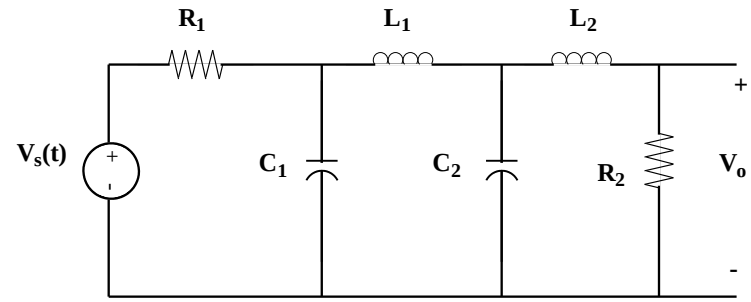

Answer:

$$H(s)=\frac{R_2}{\left\{\begin{array}{l}\left[C_1C_2L_1L_2R_1\right]s^4+\left[C_2L_1L_2+C_1C_2L_1R_1R_2\right]s^3+\\ \left[C_1R_1\left(L_1+L_2\right)+C_2\left(R_1L_2+R_2L_1\right)\right]s^2+\left[L_1+L_2+\left(C_1+C_2\right)R_1R_2\right]s+\\ \left(R_1+R_2\right)\end{array}\right\}}$$

$$H(s)=\frac{R_2/\left(R_1+R_2\right)}{\left\{\begin{array}{l}\left[\dfrac{C_1C_2L_1L_2R_1}{\left(R_1+R_2\right)}\right]s^4+\left[\dfrac{C_2L_1L_2+C_1C_2L_1R_1R_2}{\left(R_1+R_2\right)}\right]s^3+\left[\dfrac{C_1R_1\left(L_1+L_2\right)+C_2\left(R_1L_2+R_2L_1\right)}{\left(R_1+R_2\right)}\right]s^2+\\ \left[\dfrac{L_1+L_2+\left(C_1+C_2\right)R_1R_2}{\left(R_1+R_2\right)}\right]s+1\end{array}\right\}}$$

$$H(s)=\frac{\left|H(0)\right|}{\left(1-s/p_1\right)\left(1-s/p_2\right)\left(1-s/p_3\right)\left(1-s/p_4\right)} \qquad \left|H(0)\right|=R_2/\left(R_1+R_2\right)$$

4 Order Butterworth Low Pass Filter: Nodal Analysis

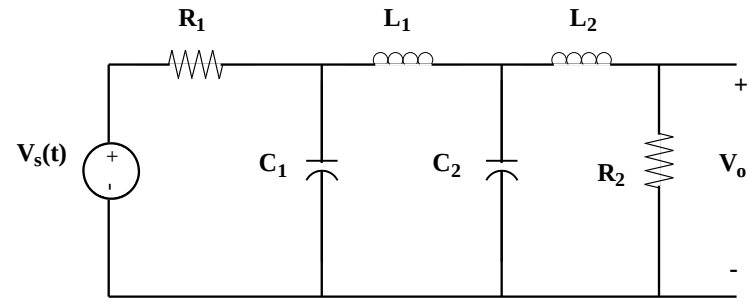

Plug in values: Choose $R_1=R_2=10K\Omega$

Solve Remaining 4 Equations for 4 Unknowns:

$C_1 \approx 243.5pF$ $C_2 \approx 588.2pF$ $L_1 \approx 58.82mH$ $L_2 \approx 24.35mH$ yields

Result using rounded component values:

$$H(\omega) = \frac{1}{(1-j\omega/p_1)(1-j\omega/p_2)(1-j\omega/p_3)(1-j\omega/p_4)}$$

$$p_{1,2} \approx -120285 \pm j(290226)r/s \rightarrow \omega_{n1} = p_1 p_2 \approx 3.14165x10^5 r/s \approx 50KHz$$

$$p_{3,4} \approx -290393 \pm j(120215)r/s \rightarrow \omega_{n2} = p_3 p_4 \approx 50.02KHz$$

Results

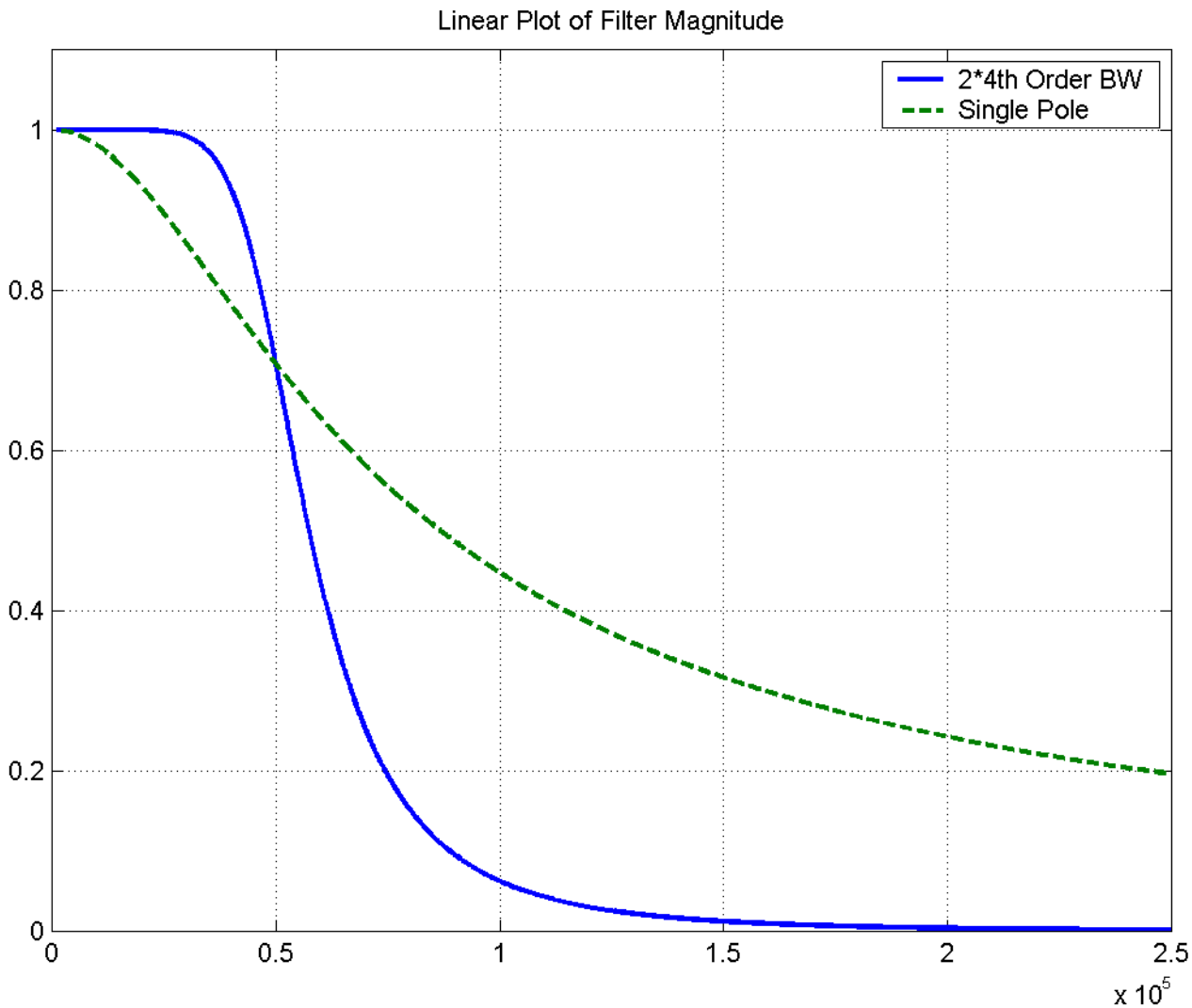
Linear Plot of Filter Magnitude
2*4th Order BW
Single Pole
1
0.8
0.6
0.4
0.2
0
0
0.5
1
1.5
2
2.5
x 10^5