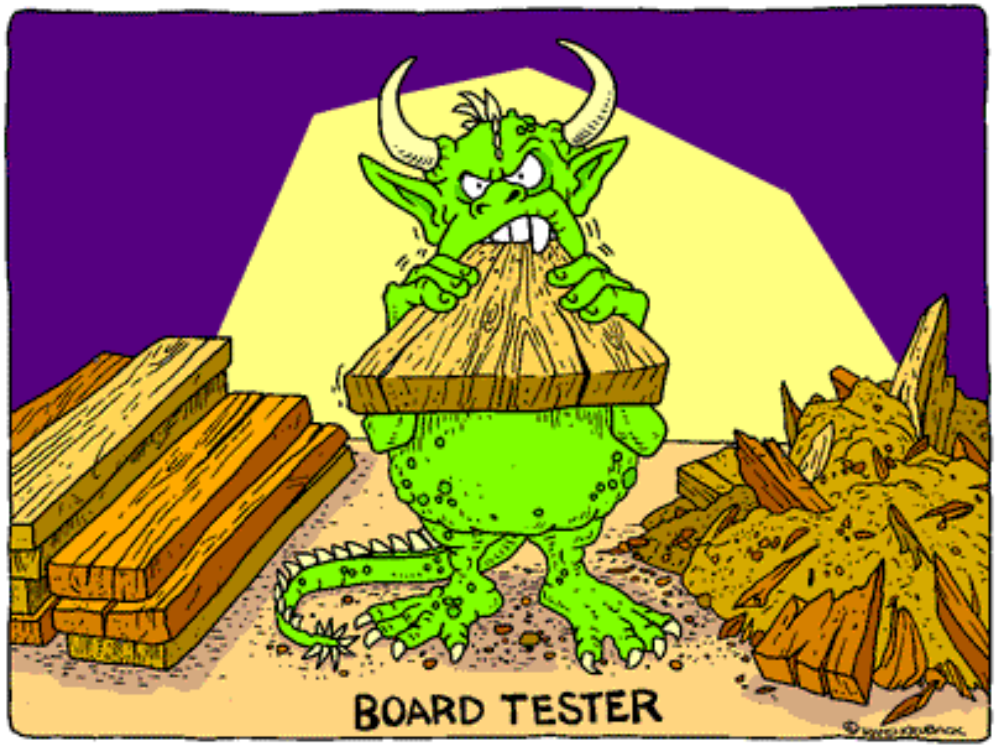

CIRCUIT THEOREMS: LINEARITY, SUPERPOSITION, THÉVENIN/NORTON EQUIVALENTS

© Fred Terry
Winter, 2010

Key Concepts from U&M 3.4-3.6

- Linearity
- Superposition
- <u>Equivalent Circuits</u>
  - Source Transformations
  - Thevenin & Norton Equivalents
- Maximum Power Transfer Theorem

Definition: Linearity

- A function f(x) is linear if f(ax)=af(x)
- Almost All Circuit Elements In 215 are Linear
  - Resistors V=IR
    - V(I) is linear, I(V) is linear
  - Linearly Dependent Sources
  - Capacitors
  - Inductors

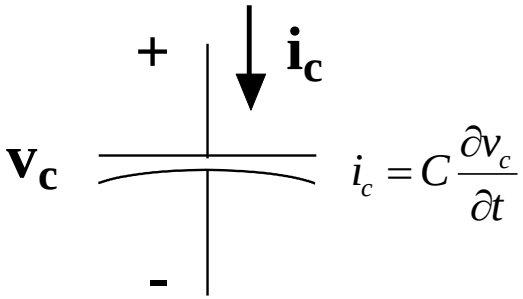

$$i_c = C\frac{\partial v_c}{\partial t}$$

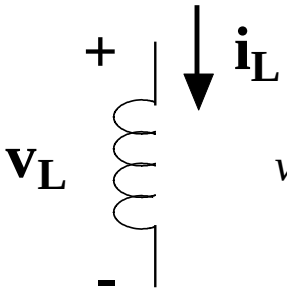

$$v_L = L\frac{\partial i_L}{\partial t}$$

Linearity

- With A Circuit Made Up of All Linear Elements, All I-V Results Are Linear
- Later, We Will Take A Brief Look at Some Non-linear Elements, but in Most Cases Will Show How to Use Piecewise Linear Models to Analyze These Circuits

Superposition

- Superposition Principle: The voltage drop across and current through an element in any linear circuit are the algebraic sums of the voltages across and currents through that element due to each *independent* source acting alone.
- Step by step procedure:
  1) Turn off all all independent sources except 1. Find the output voltage and/or current due to that source using nodal or mesh analysis
  2) Repeat step (1) for all <u>independent</u> sources
  3) Add all these results to obtain the actual voltage and/or current of interest

Superposition example

Find v_x

First We Will Do Nodal Analysis

Then We Will Do Superposition

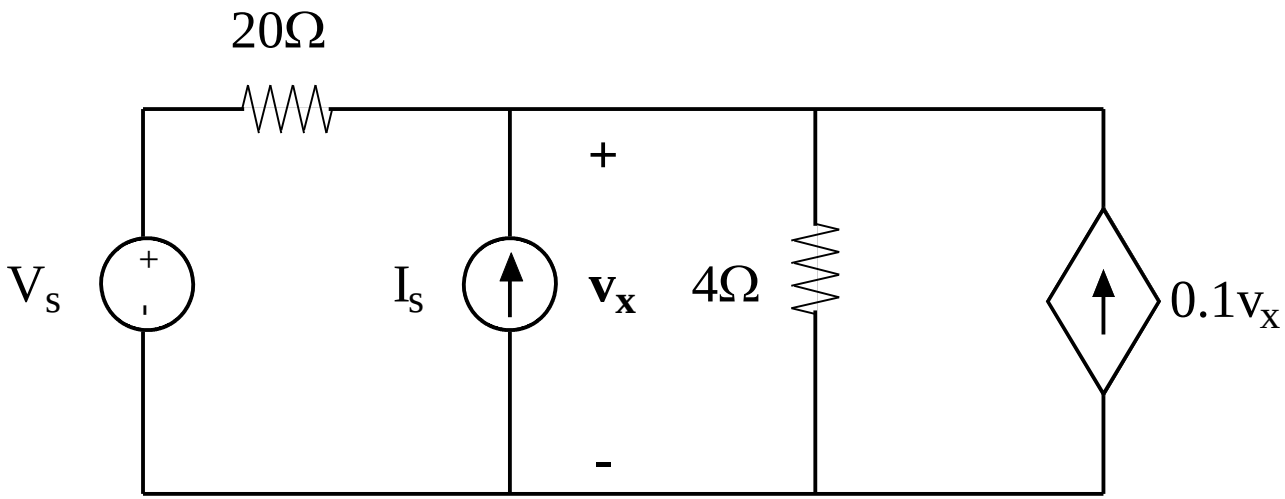

Nodal

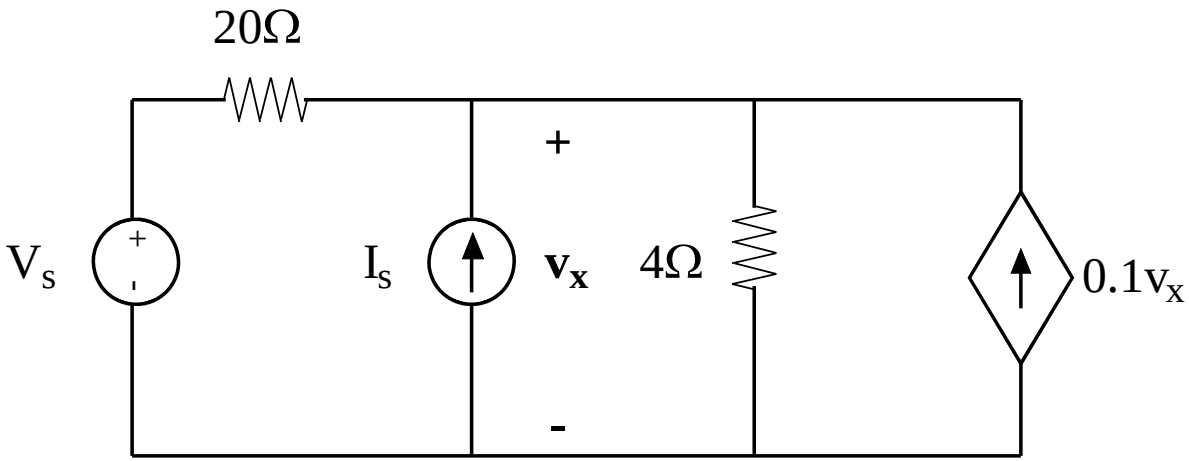

Superposition Step 1: Turn off 2A Source

Current Source with I=0 is an OPEN CIRCUIT

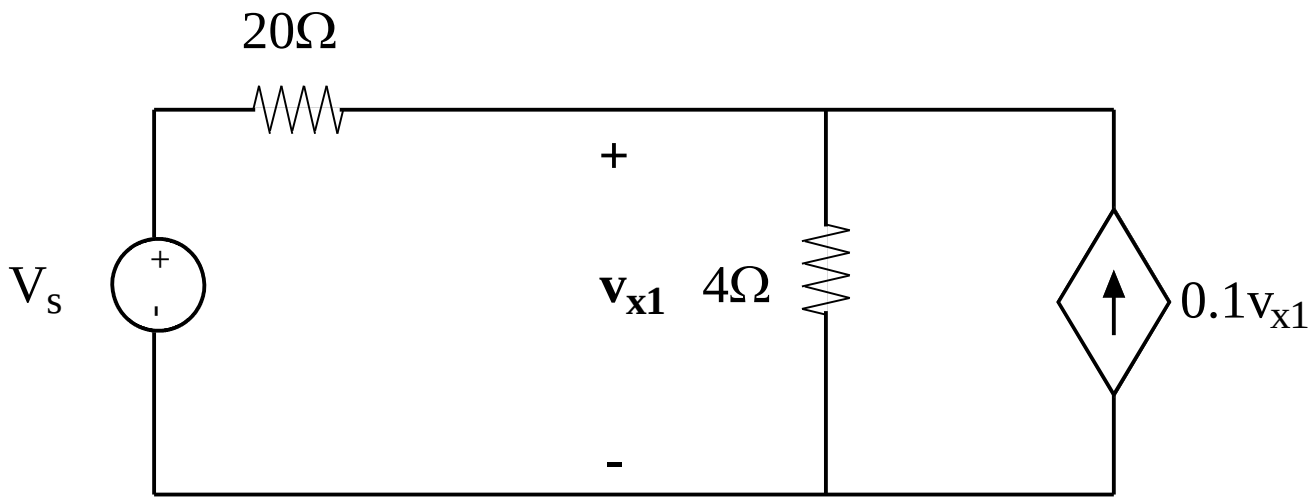

KCL:

$$\frac{(V_s - v_{x1})}{20\Omega} + 0.1v_{x1} + \frac{-v_{x1}}{4\Omega} = 0$$

$$\rightarrow v_{x1} = +0.25V_s = V_s/4$$

Note that we leave the *dependent* source in the reduced circuit!

Superposition Step 2: Turn off 10V Source

Voltage Source with V=0 is an SHORT CIRCUIT

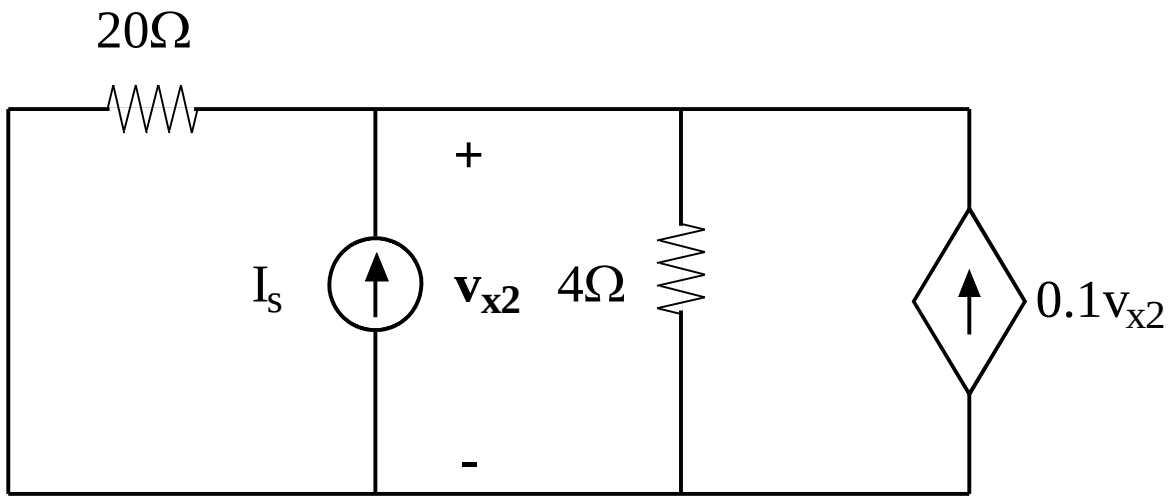

Note, again, that we leave the *dependent* source in the reduced circuit!

Little Trick: 20&4Ω Resistors are in Parallel in Reduced Circuit

KCL:

$$\left(I_s + 0.1v_{x2}\right) = v_{x2} \Big/ \left(\frac{10}{3}\Omega\right)$$

$$\rightarrow v_{x2} = 5I_s$$

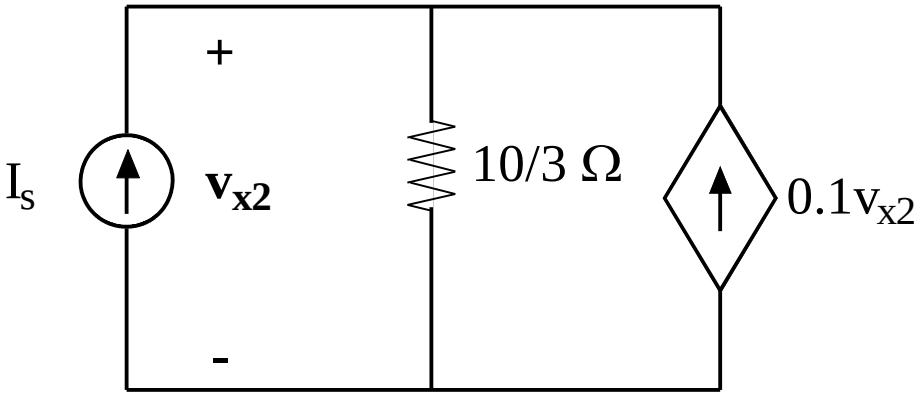

Combine to get total answer:

$$v_x = v_{x1} + v_{x2} = 0.25V_s + 5I_s$$

Note that v_x is linear function of V_s and I_s

Linearity & Superposition

- For DC Circuit Analysis, Superposition is More Work than Nodal Analysis
  - Nodal & Mesh Analysis "By Inspection"
- The Big Pay-off for Linearity & Superposition together is in AC Analysis:
  - Any Periodic Signal Can Be Represented By A Sum Of Sinusoidal Signals (Sin Waves, *Fourier's Theorem*)
  - The Response of Any Linear Circuit to a Periodic Signal Can be Found by Adding Up the Response to Each Individual Sinusoidal Signal

Nodal By Inspection: Example

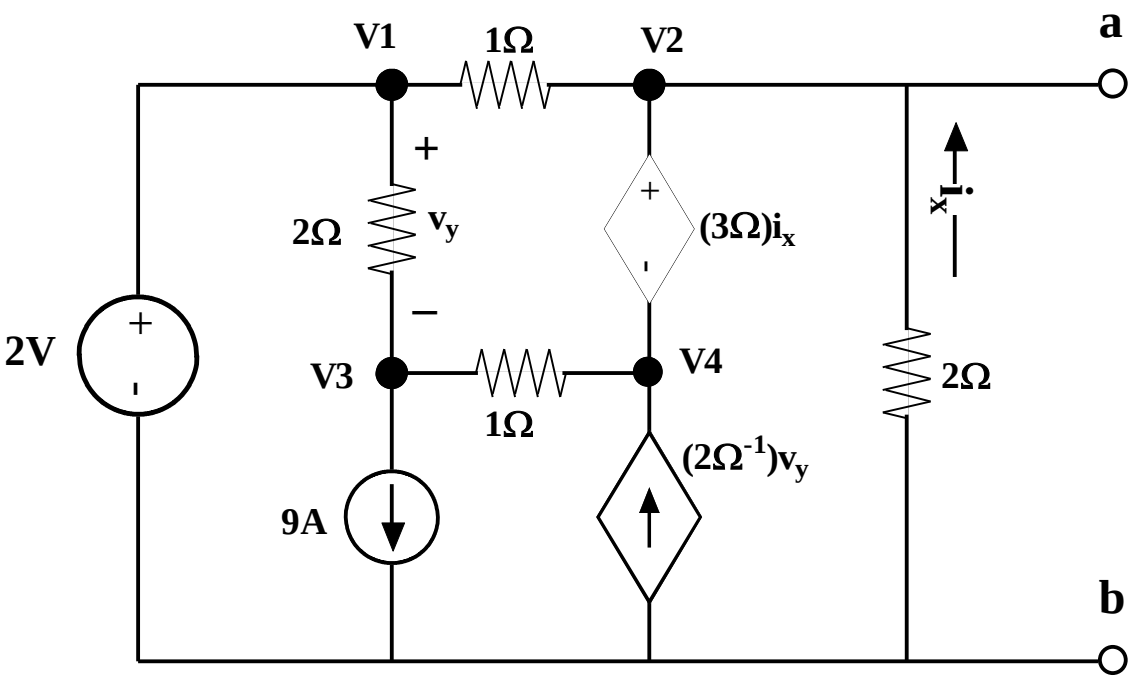

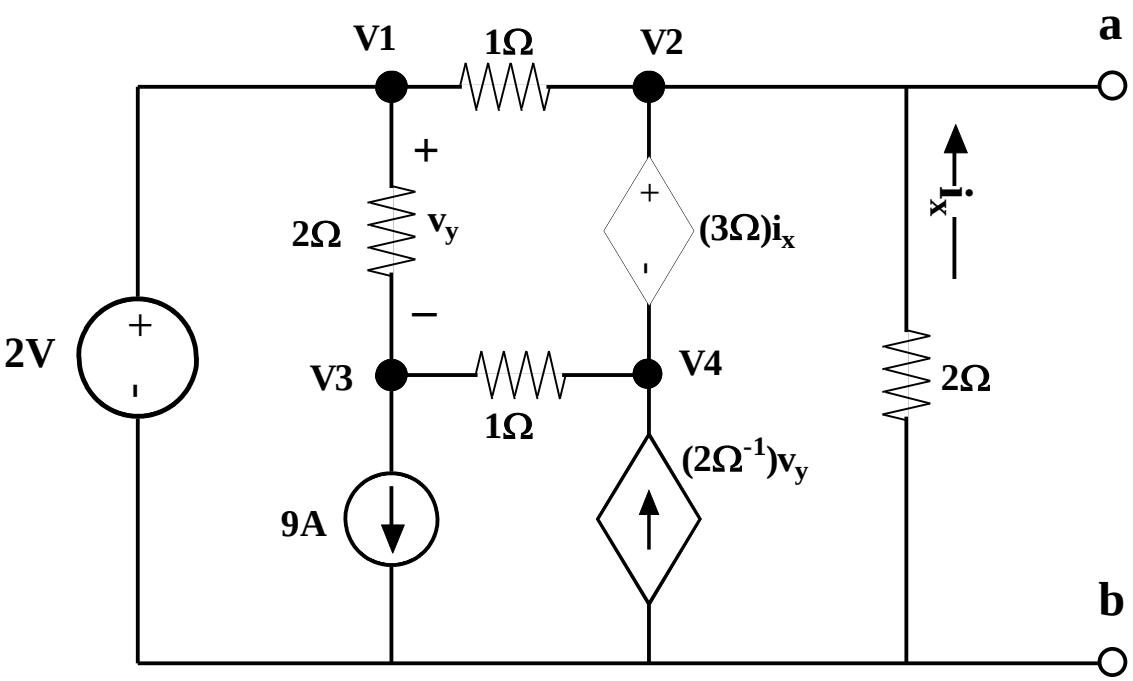
a
V1
1Ω
V2
+
2Ω
v_y
−
+
(3Ω)i_x
i_x
2V
+
V3
1Ω
V4
2Ω
(2Ω^{-1})v_y
9A
b

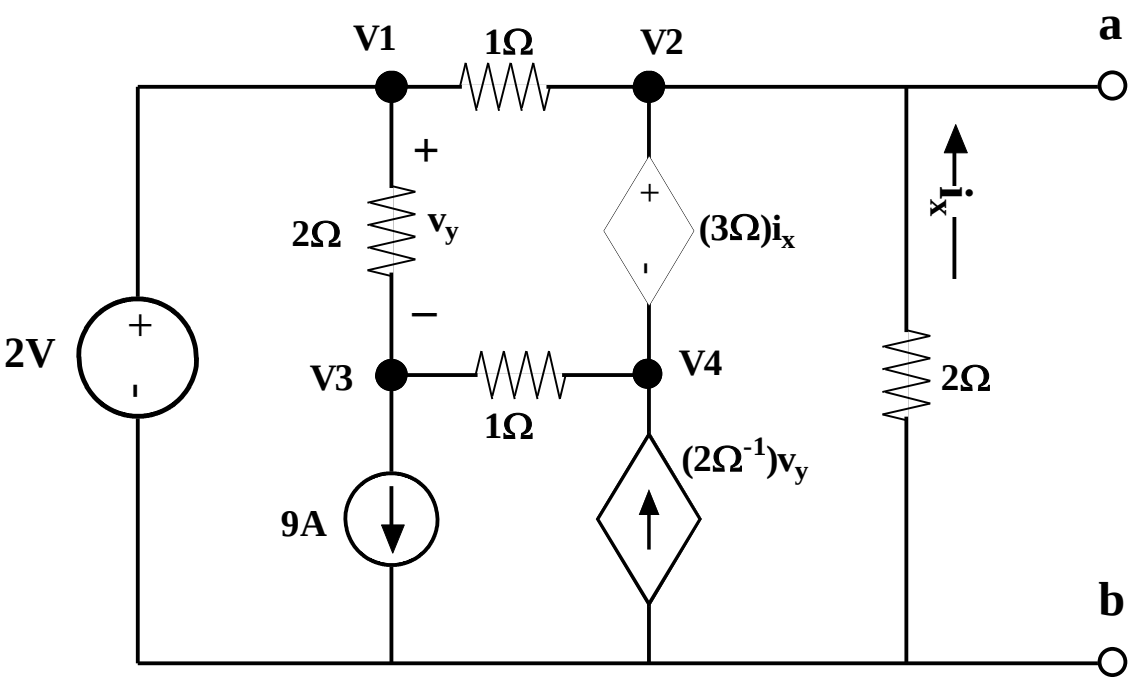
a
V1
1Ω
V2
+
2Ω
v_y
−
+
(3Ω)i_x
i_x
2V
+
V3
1Ω
V4
2Ω
(2Ω^{-1})v_y
9A
b

Equivalent Circuits

- Key Ideas:
  - Reduce a big, messy circuit with 2 output terminals to a simpler, easier to apply case that has the *same I-V characteristics at the output terminals*
  - Transform a circuits problem to make it easier to solve

Source Transformations

- Viewed from the output terminals a&b, the two circuits below are *equivalent*
- Replacement of a circuit by an equivalent can make some problems easier to solve

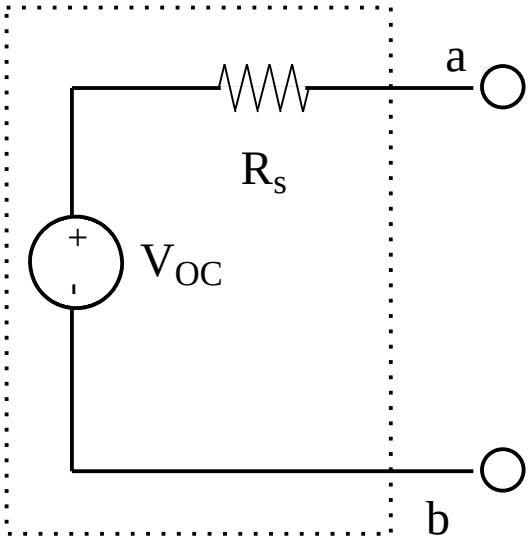

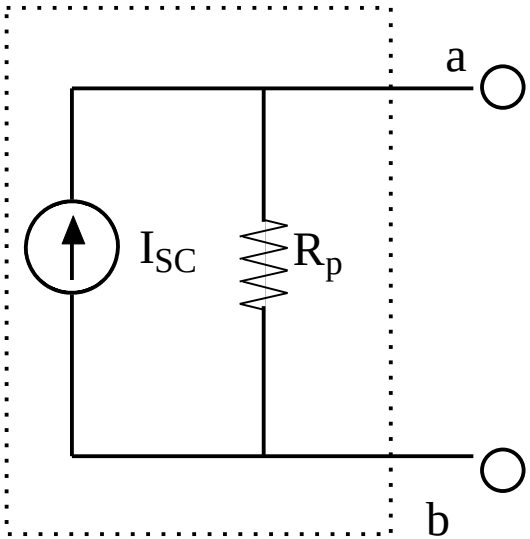

$$R_S = R_P$$

$$V_{OC} = R_P I_{SC}$$

$$I_{SC} = V_{OC} / R_S$$

Practice Problem by Source Transformation

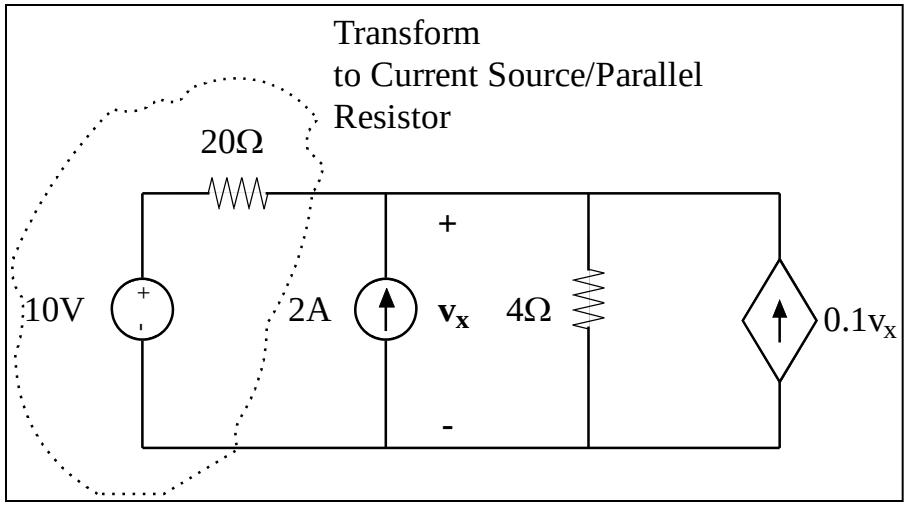

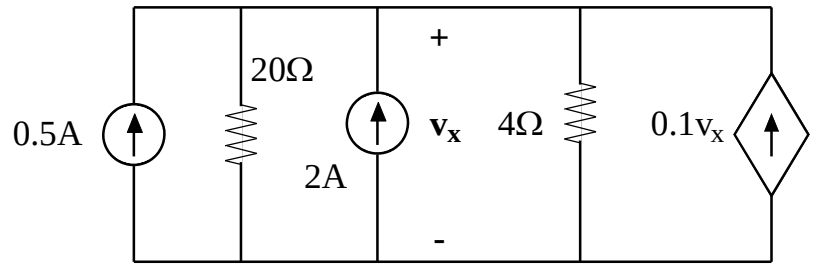

Last trick
$0.1v_x$ source= -10Ω
Resistor

Combine Parallel Elements

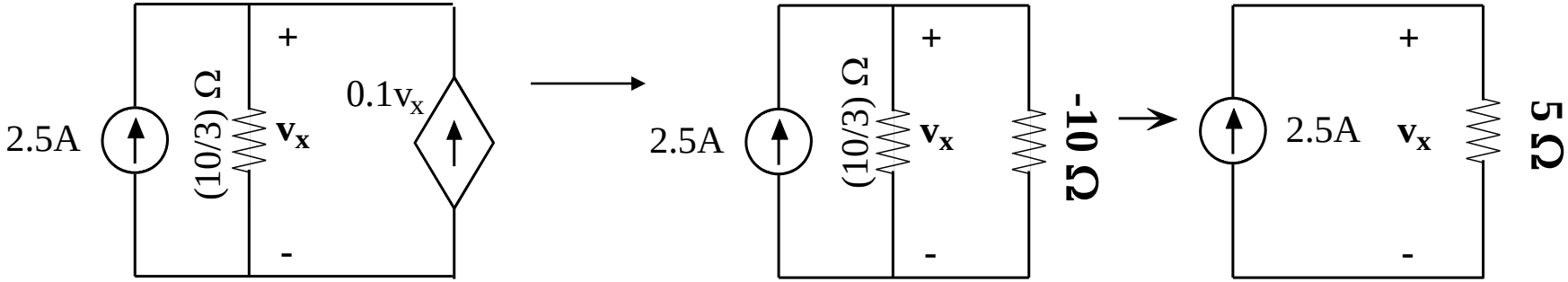

V_x=+12.5V

Theorem

- All Circuits containing only Resistors and Linearly Dependents Sources which have 2 output terminals can be modeled by a single Resistor

Assume

N+1 nodes in

Circuit

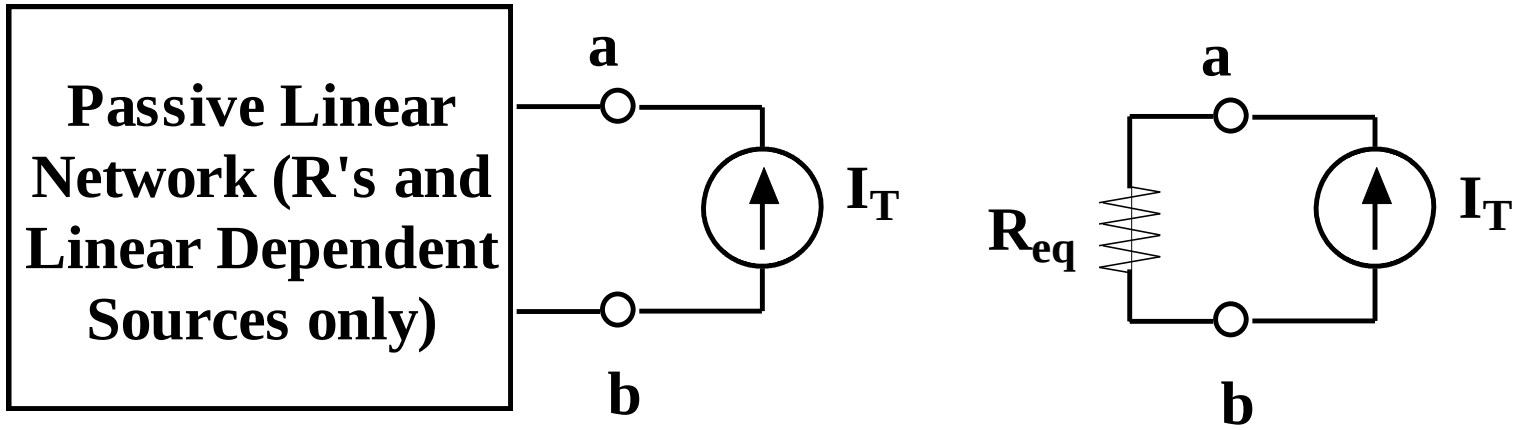

Proof

- Ground Node b, leaving N non-reference nodes
- Let Node 1 be Node a
- Nodal Analysis will yield the following matrix equation. All source terms except at Node 1 are zero due to the lack of independent V and/or I sources

$$\begin{bmatrix} G_{1,1} & \cdots & G_{1,N} \\ \vdots & \ddots & \vdots \\ G_{N,1} & \cdots & G_{N,N} \end{bmatrix} \begin{bmatrix} V_1 \\ \vdots \\ V_N \end{bmatrix} = \begin{bmatrix} I_T \\ \vdots \\ 0 \end{bmatrix}$$

$$\overleftrightarrow{G} \bullet \vec{V} = \vec{I}$$

$$\vec{V} = \left[\overleftrightarrow{G}\right]^{-1} \bullet \vec{I}$$

$$V_1 = V_{ab} = \left[\overleftrightarrow{G}\right]_{1,1}^{-1} \bullet I_T \Rightarrow \mathrm{R}_{eq} = \left[\overleftrightarrow{G}\right]_{1,1}^{-1}$$

Example: Find R_{eq}

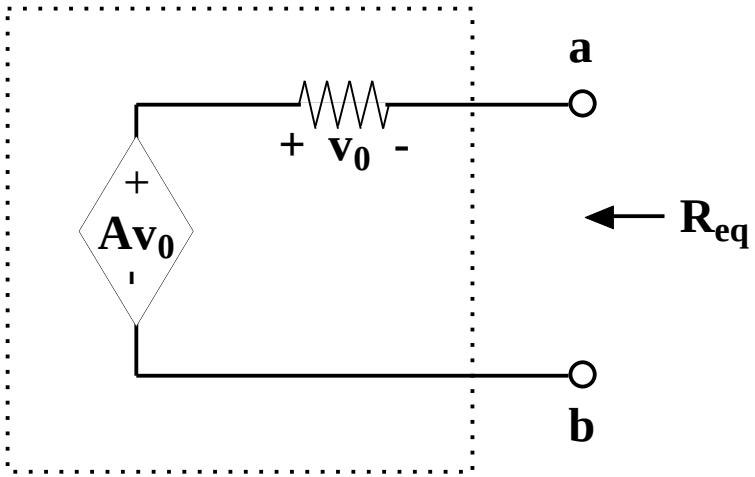

Probe with Test Source

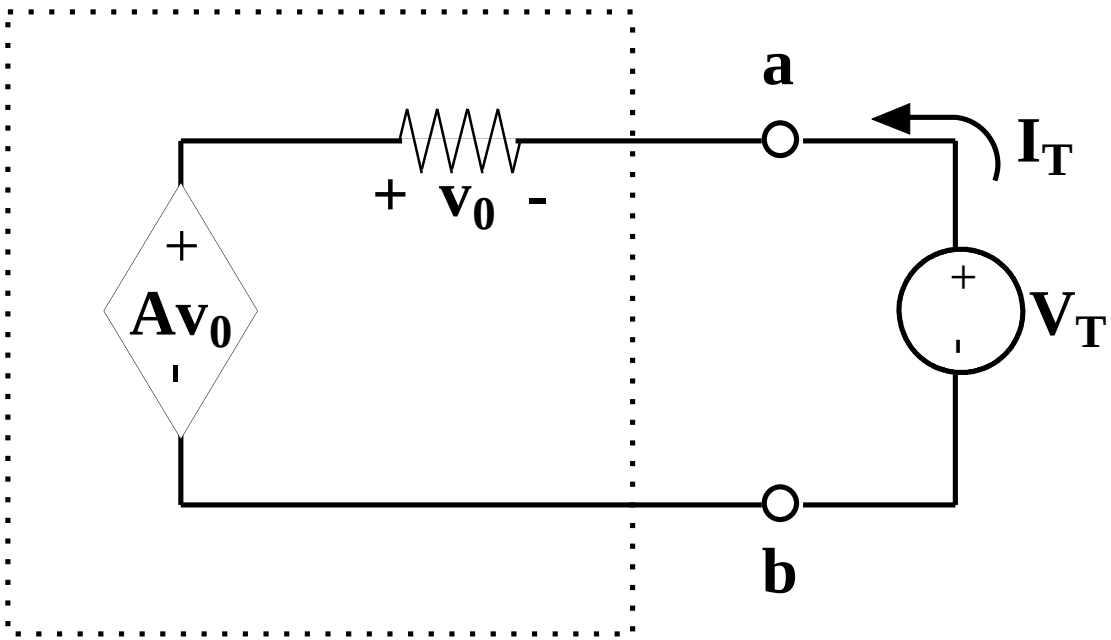

Simple Mesh

KVL:

$$V_T = -v_0 + Av_0 = (A-1)v_0$$

$$\rightarrow v_0 = \left(\frac{1}{A-1}\right)V_T$$

$$I_T = \left(-\frac{v_0}{R}\right) = \left(\frac{1}{1-A}\right)\left(\frac{V_T}{R}\right)$$

$$\rightarrow \mathrm{R}_{eq} = \left(\frac{V_T}{I_T}\right) = (1-A)R$$

Note that Req can be Positive, Zero, or ***<u>Negative</u>*** depending on A.
R_{eq}<0 is possible since the dependent source can supply power

Theorem: Thevenin & Norton Equivalents

- All Linear Circuits containing only R's, Constant Sources, and Linear Dependent Sources and with 2 ouput terminals can be modeled as a {V-source+Series Resistor} (Thevenin) or an {I-source+Parallel Resistor} (Norton)
- Delivered Power to a load $=V_{ab}*I_L$ is considered

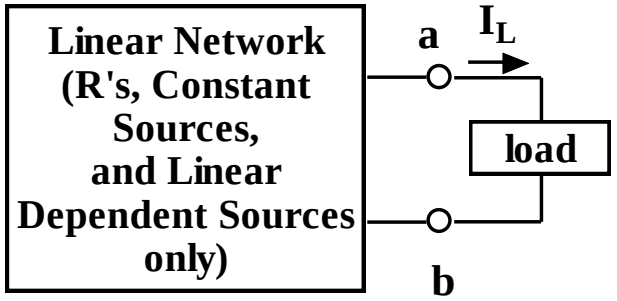

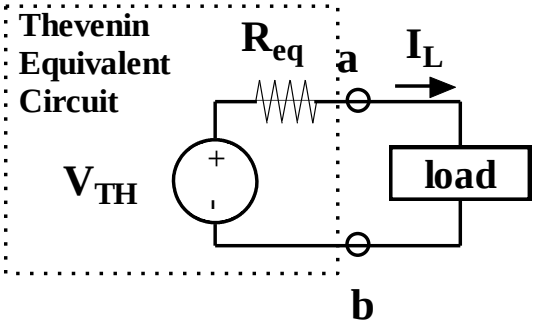

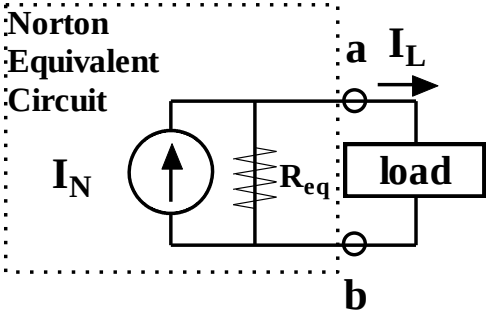

Theorem: Thevenin & Norton Equivalents

- Thevenin and Norton equivalent resistances are the SAME for a given circuit
- $V_{TH}=V_{oc}$ Open Circuit Voltage ($I_L=0$)
- $I_N=I_{SC}$ Short Circuit Current – Load is short, $V_{ab}=0$
- $V_{TH}=I_N R_{eq}$

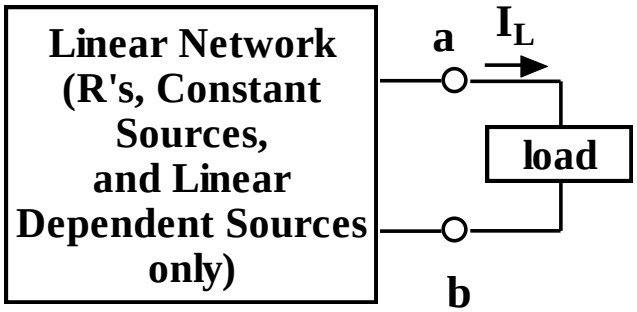

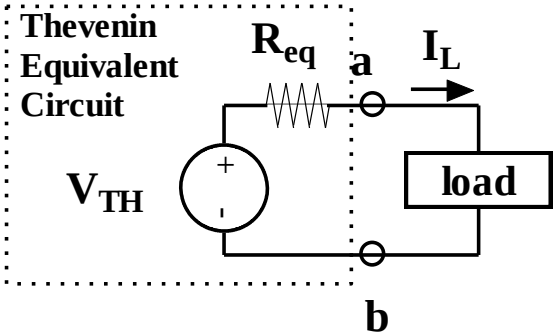

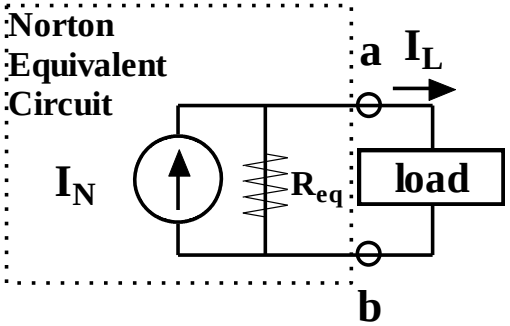

Proof

- Ground Node b, leaving N non-reference nodes
- Let Node 1 be Node a
- Nodal Analysis will yield the following matrix equation. All source terms except at Node 1 are zero due to the lack of independent V and/or I sources
- R_{eq} can be positive, zero, or negative

$$\left[Node-Voltage-Driven-Currents-Out-of-Nodes\right]$$
$$=\left[Equivalent-Current-Sources-Into-Nodes\right]$$

$$\begin{bmatrix} G_{1,1} & \cdots & G_{1,N} \\ \vdots & \ddots & \vdots \\ G_{N,1} & \cdots & G_{N,N} \end{bmatrix}\begin{bmatrix} V_1 \\ \vdots \\ V_N \end{bmatrix}=\begin{bmatrix} I_1-I_L \\ \vdots \\ I_N \end{bmatrix}$$

$$\overleftrightarrow{G}\bullet\vec{V}=\vec{I}$$

$$\vec{V}=\left[\overleftrightarrow{G}\right]^{-1}\bullet\vec{I}$$

$$V_1=V_{ab}=\left[\overleftrightarrow{G}\right]_{1,1}^{-1}\bullet\left(I_1+I_L\right)\Rightarrow$$

$$\mathrm{R}_{eq}=\left[\overleftrightarrow{G}\right]_{1,1}^{-1}$$

$$V_{TH}=V_{oc}=\left[\overleftrightarrow{G}\right]_{1,1}^{-1}\bullet I_1$$

$$I_N=I_1$$

Simple Example

- Find Thevenin and Norton Equivalent Circuits for

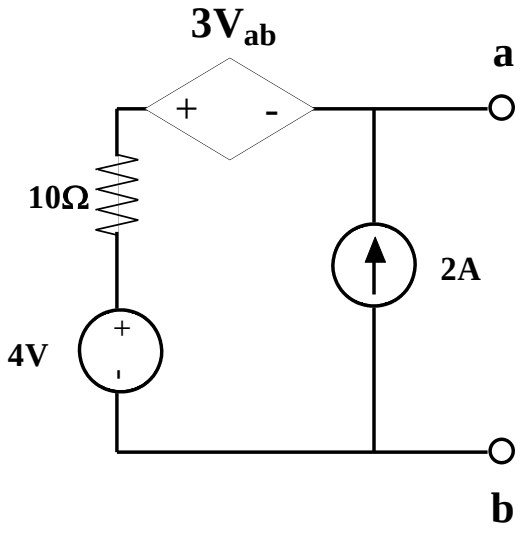

Brute Force

- Do Nodal Assuming a General Load

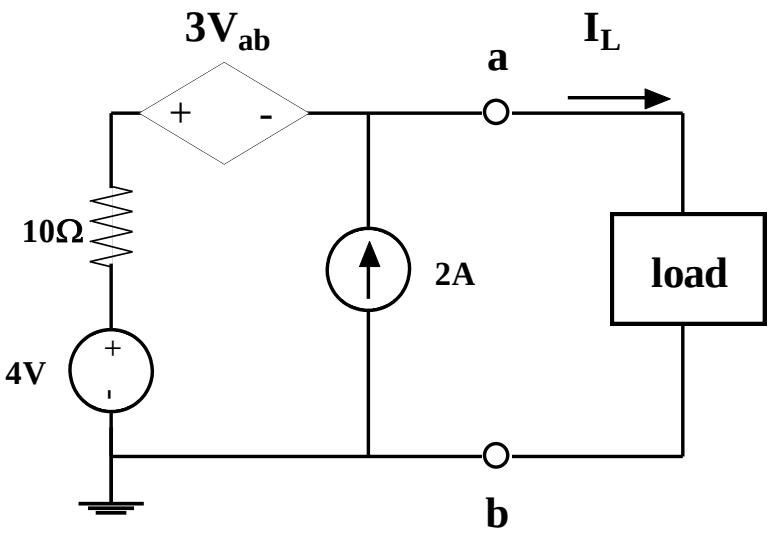

Brute Force

- Do Nodal Assuming a General Load

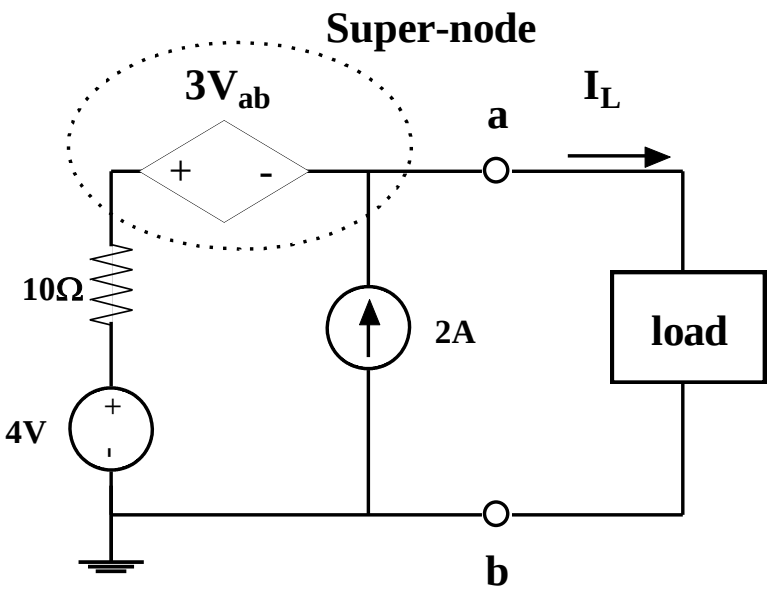

$$V_a = V_{ab}$$

$$\left[\frac{(V_{ab} + 3V_{ab}) - 4V}{10\Omega}\right] + I_L = 2A$$

$$\rightarrow$$

$$I_L = \left[\frac{-4V_{ab}}{10\Omega}\right] + 2.4A = \left[\frac{-V_{ab}}{2.5\Omega}\right] + 2.4A$$

$$V_{TH} = V_{oc} = 2.4A \bullet 2.5\Omega = 6V$$

$$I_N = I_{SC} = 2.4A$$

$$\mathrm{Re}\,q = 2.5\Omega$$

I-V Curve

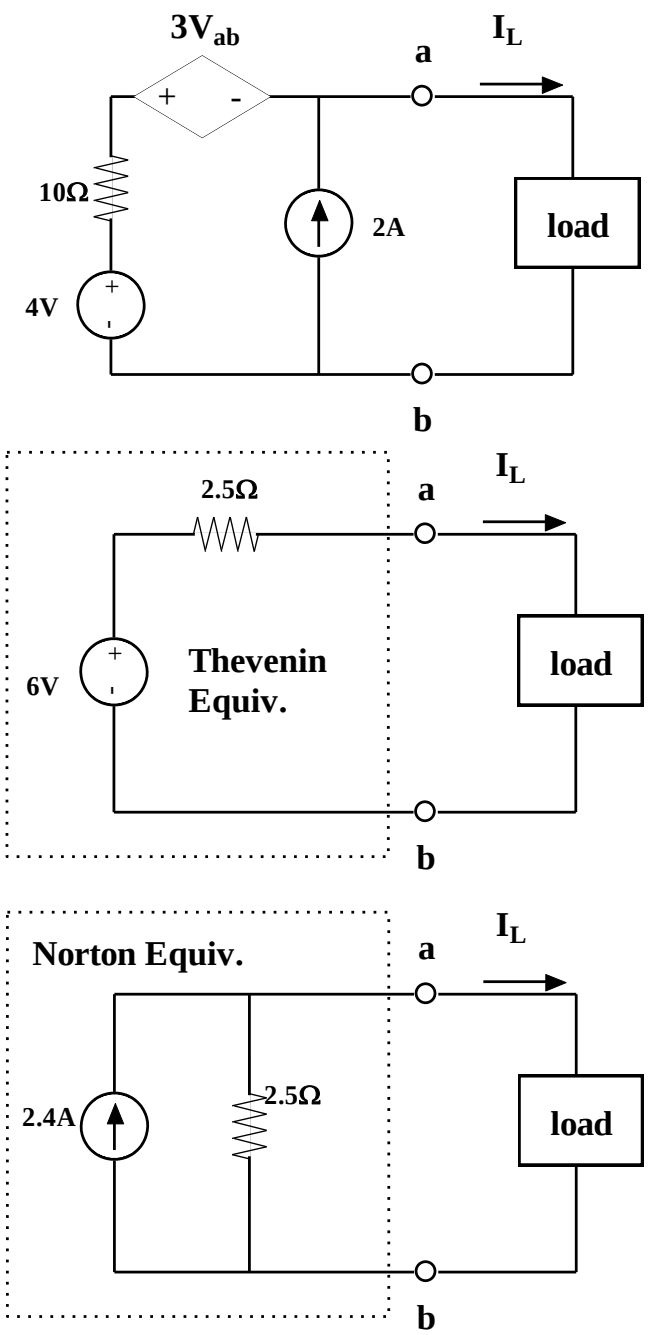
3V_ab
+
-
a
I_L
10Ω
2A
load
4V
b
2.5Ω
a
I_L
6V
Thevenin
Equiv.
load
b
Norton Equiv.
a
I_L
2.4A
2.5Ω
load
b

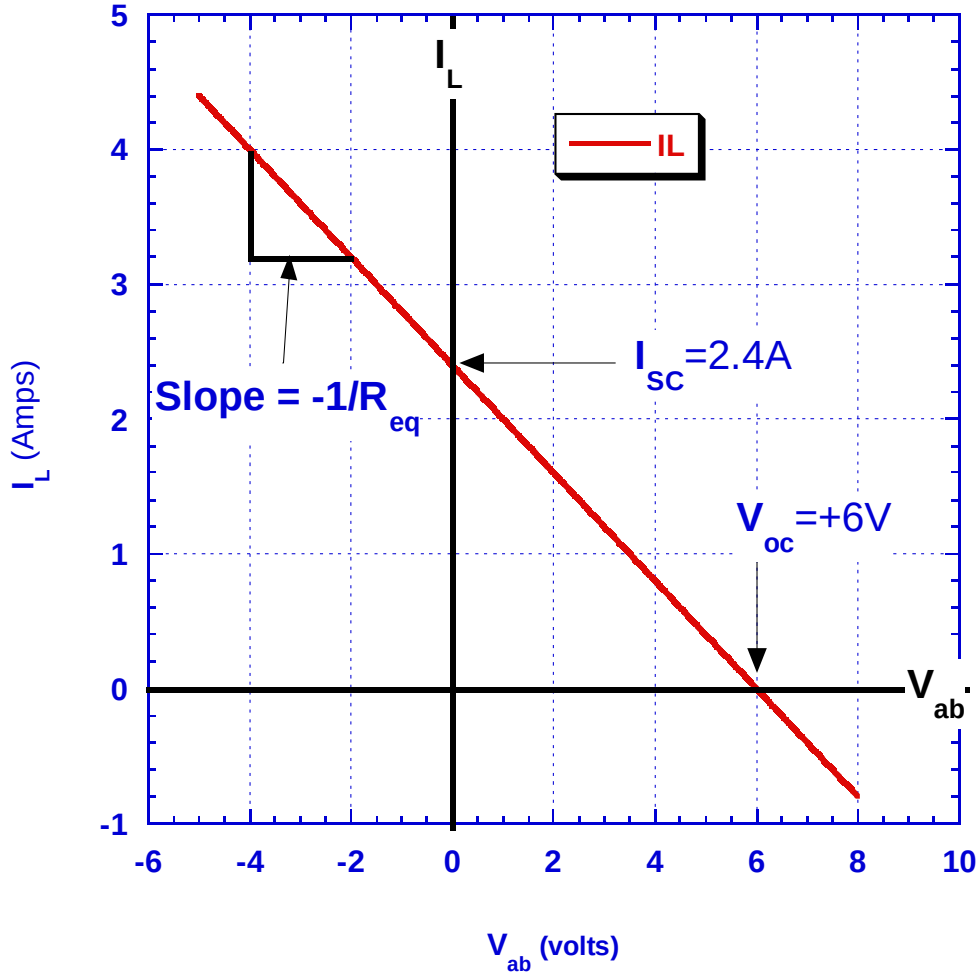
I_L
IL
Slope = -1/R_eq
I_sc=2.4A
V_oc=+6V
V_ab
I_L (Amps)
V_ab (volts)
5
4
3
2
1
0
-1
-6
-4
-2
0
2
4
6
8
10

Simpler Procedure to Get Thevenin/Norton Equivalents

- Note that it is LINEAR
  - So *ALL* we need is <u>2 points</u> or <u>1 point + Slope</u>
  - Special 1 Point+ Slope Cases:
    - $V_{OC}=V_{TH} + R_{eq}$
    - $I_{SC}=I_N + R_{eq}$
  - Special 2 point case: $V_{OC}=V_{TH}$ & $I_{SC}=I_N$
    - $Req= V_{OC}/ I_{SC}$
- Find easiest 2 of 3 (V_{OC}, I_{SC}, R_{eq})
  - V_{OC} and/or I_{SC} from Nodal, Mesh, Superposition, Source transformation
  - Another way to get R_{eq}?

Find R_{eq} Independently of I_{SC}, V_{OC}

- Turn off All *INDEPENDENT* Sources in Circuit (leave *DEPENDENT* ones)
- Apply test voltage (or test current) and find induced current (or induced voltage)

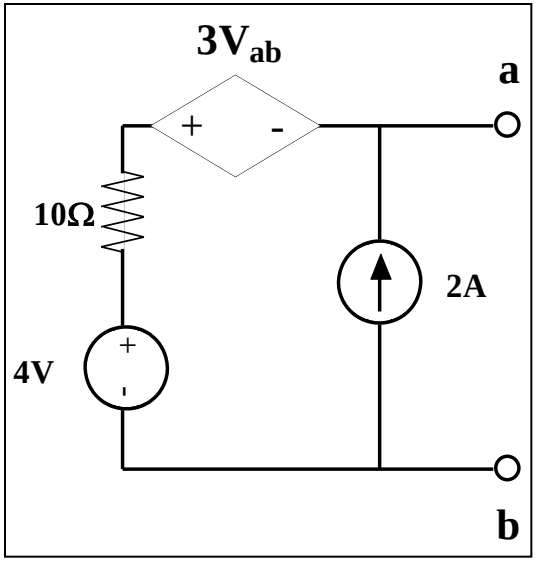

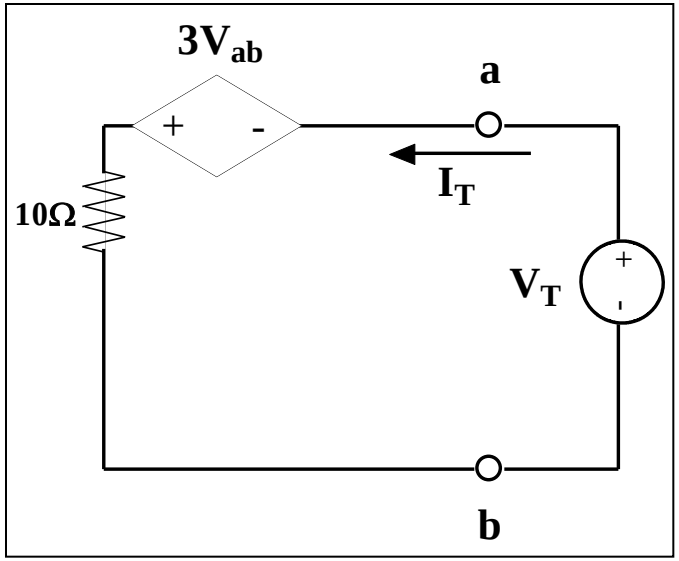

R_{eq} Example

$$I_T = \frac{4V_{ab}}{10\Omega}$$

$$V_T = V_{ab}$$

$$R_{eq} = \frac{V_T}{I_T} = \frac{10\Omega}{4} = 2.5\Omega$$

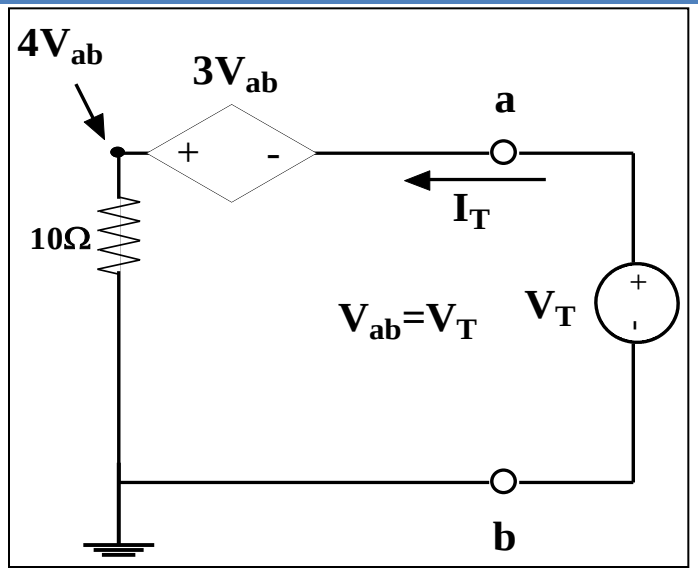

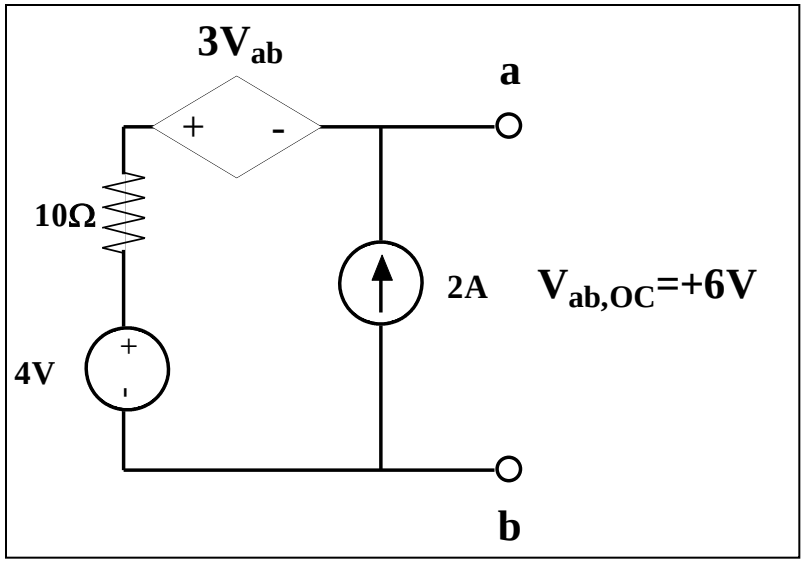

Simple Nodal Analysis of Original Circuit Under Open Circuit Conditions yields V_{OC}=+6V

Quick Nodal Analysis for V_{oc}

Supernode KCL

$$0 = -2A + \frac{(3V_{ab} + V_{ab}) - 4V}{10\Omega}$$

$$4V_{ab} = 4V + (10\Omega)(2A) = 24V$$

$$V_{ab} = +6V = V_{OC} = V_{TH}$$

So

$$I_{SC} = I_N$$

$$= \left(\frac{V_{OC}}{R_{eq}}\right) = \frac{6V}{2.5\Omega}$$

$$= +2.4A$$

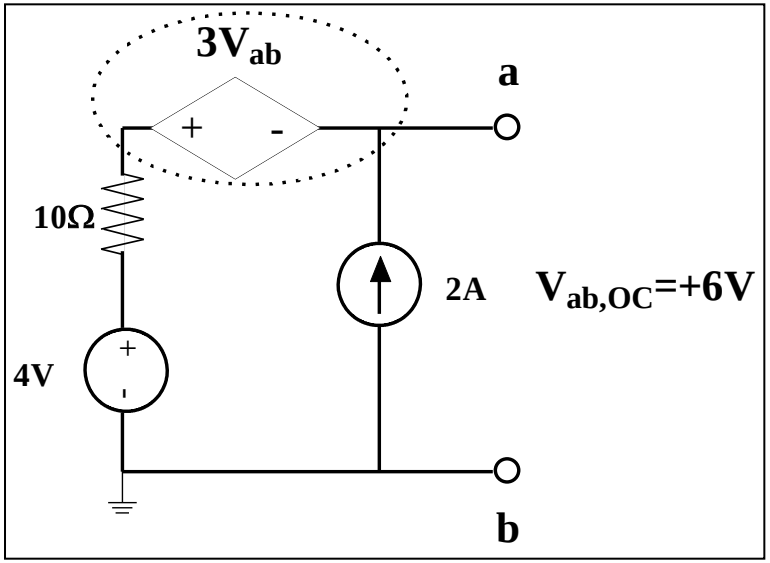

Verification: Nodal Analysis for $I_{sc}=I_N$

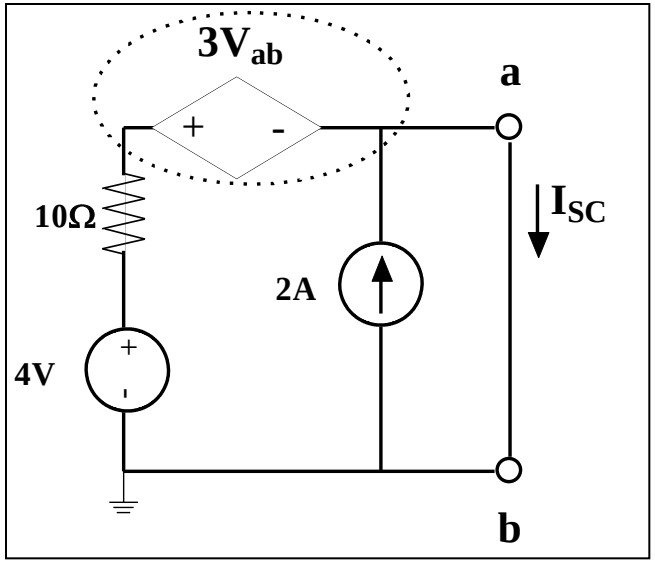

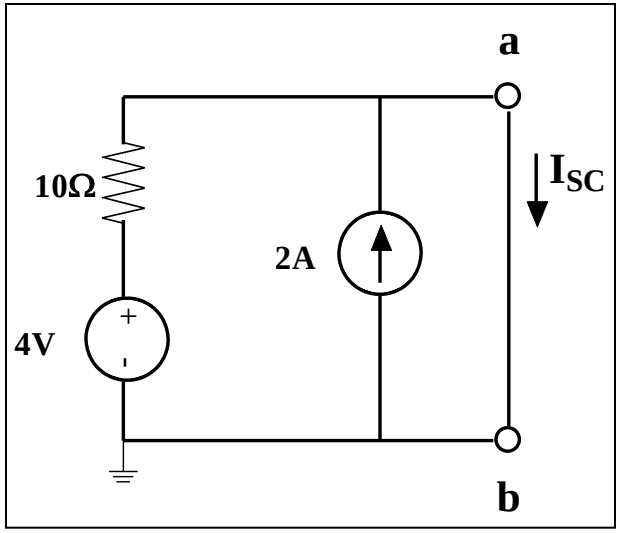

Note that V_{ab}=0V due to Short