EECS 215 REVIEW: NODAL ANALYSIS, THEVENIN/NORTON EQUIVALENTS

©Fred Terry
Winter, 2010

#1: Basic Problem

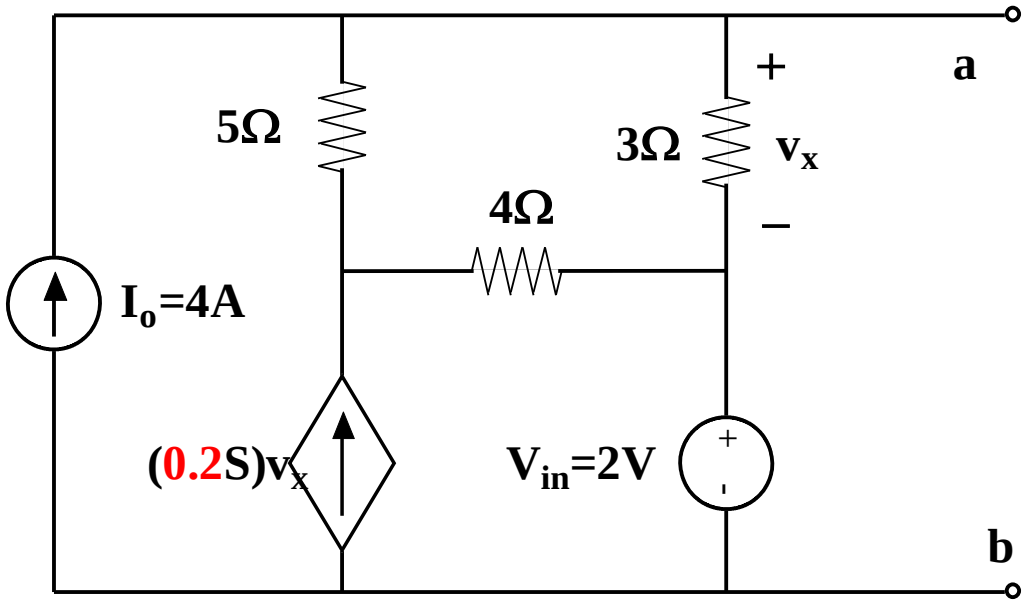

#1: Basic Problem

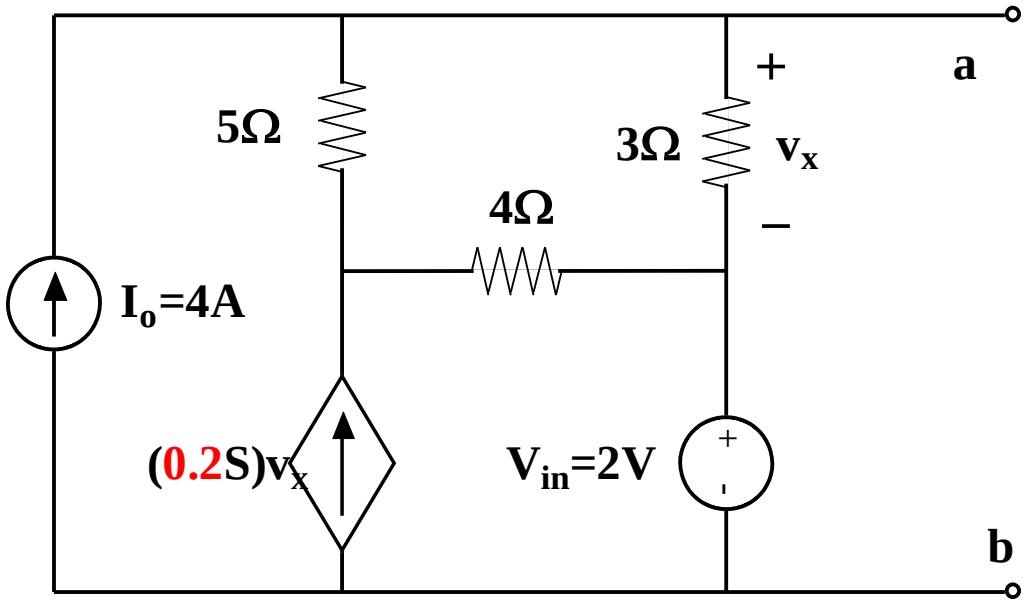

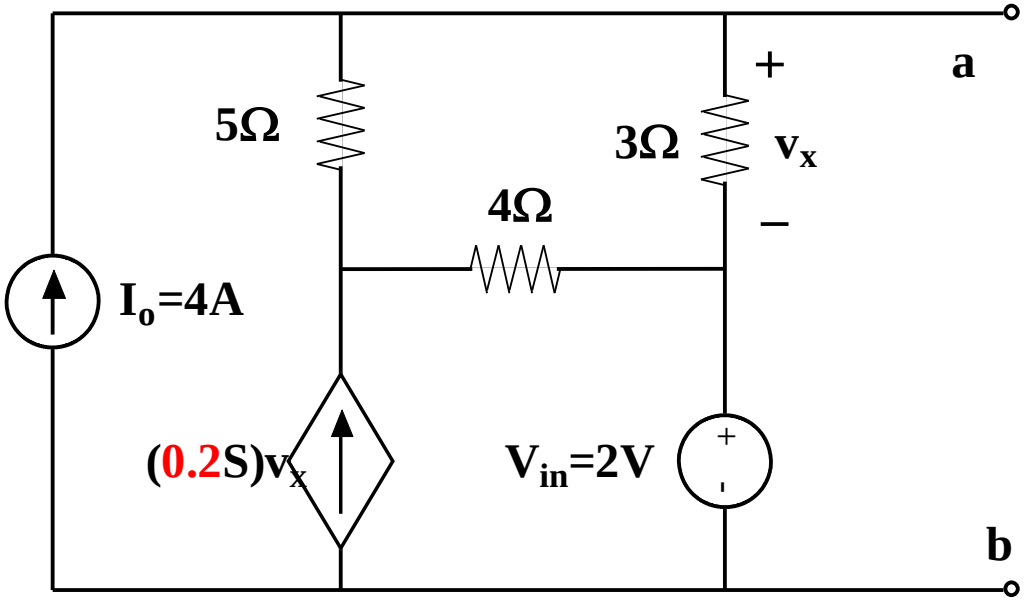
5Ω
3Ω
+
a
v_x
4Ω
–
I_o=4A
(0.2S)v_x
V_{in}=2V
+
-
b

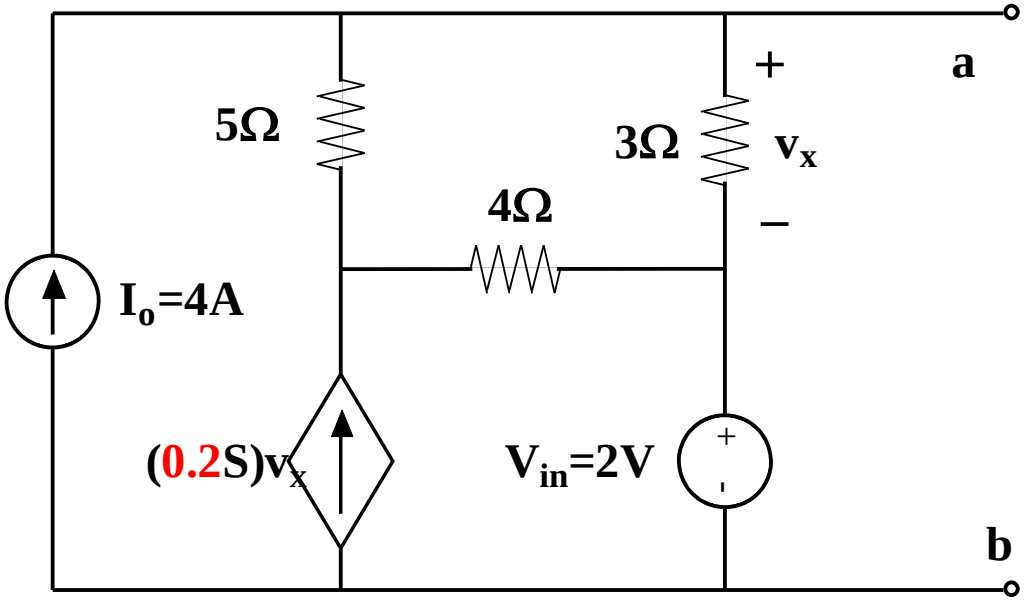
5Ω
3Ω
+
v_x
–
a
4Ω
I_o=4A
(0.2S)v_x
V_{in}=2V
+
-
b

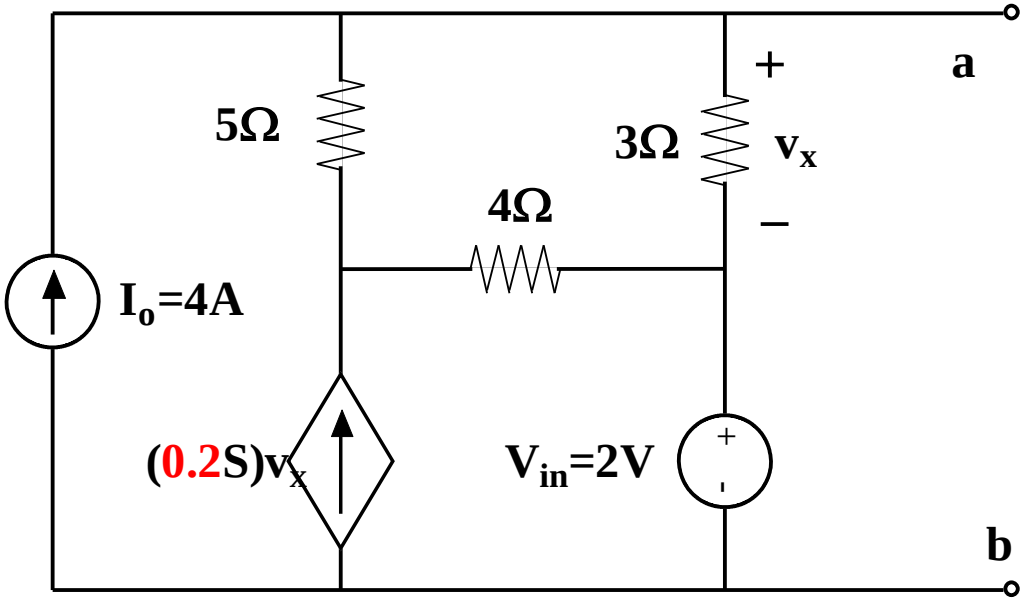
5Ω
3Ω
4Ω
+
a
v_x
–
I_o=4A
(0.2S)v_x
V_{in}=2V
+
-
b

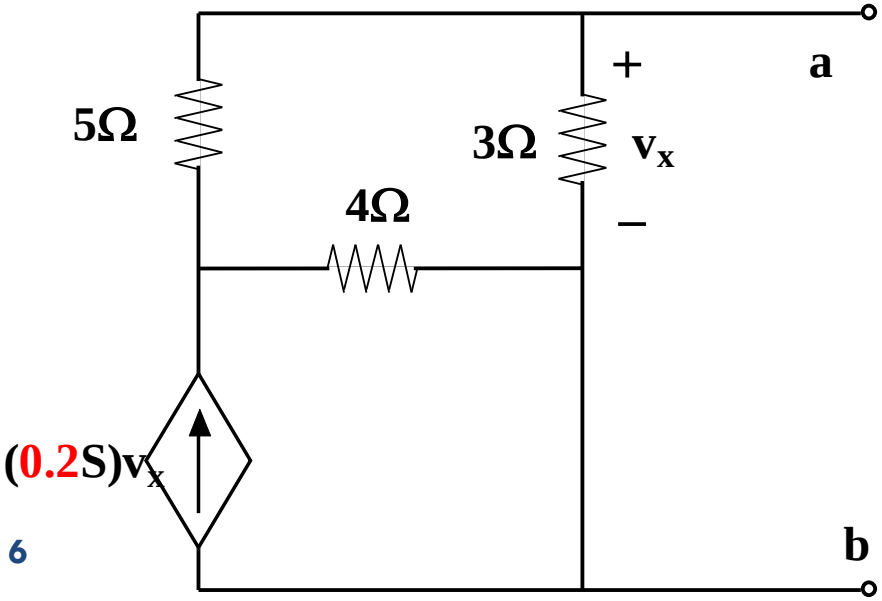
5Ω
3Ω
4Ω
+
a
v_x
–
(0.2S)v_x
b

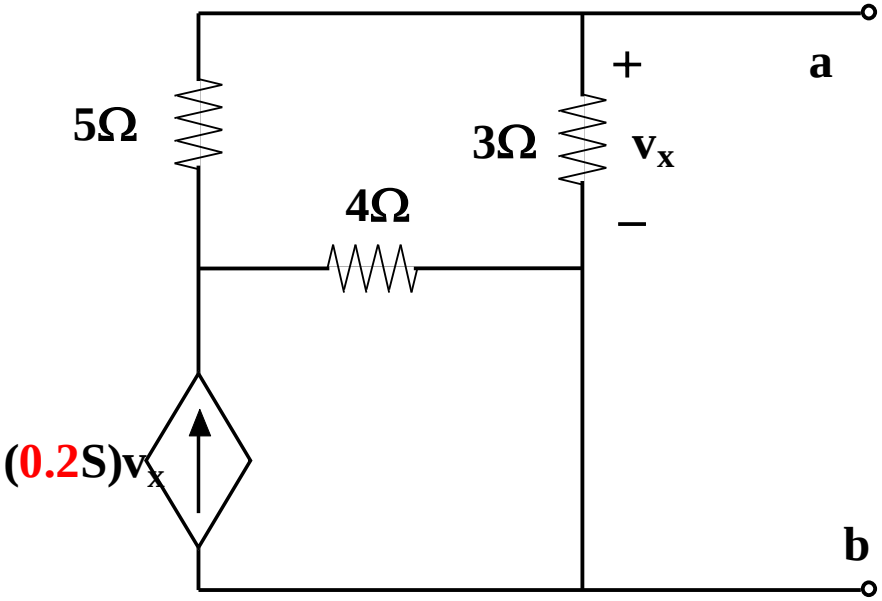
5Ω
3Ω
+
v_x
–
4Ω
(0.2S)v_x
a
b

#1

#2: Equivalent Circuit between c&d

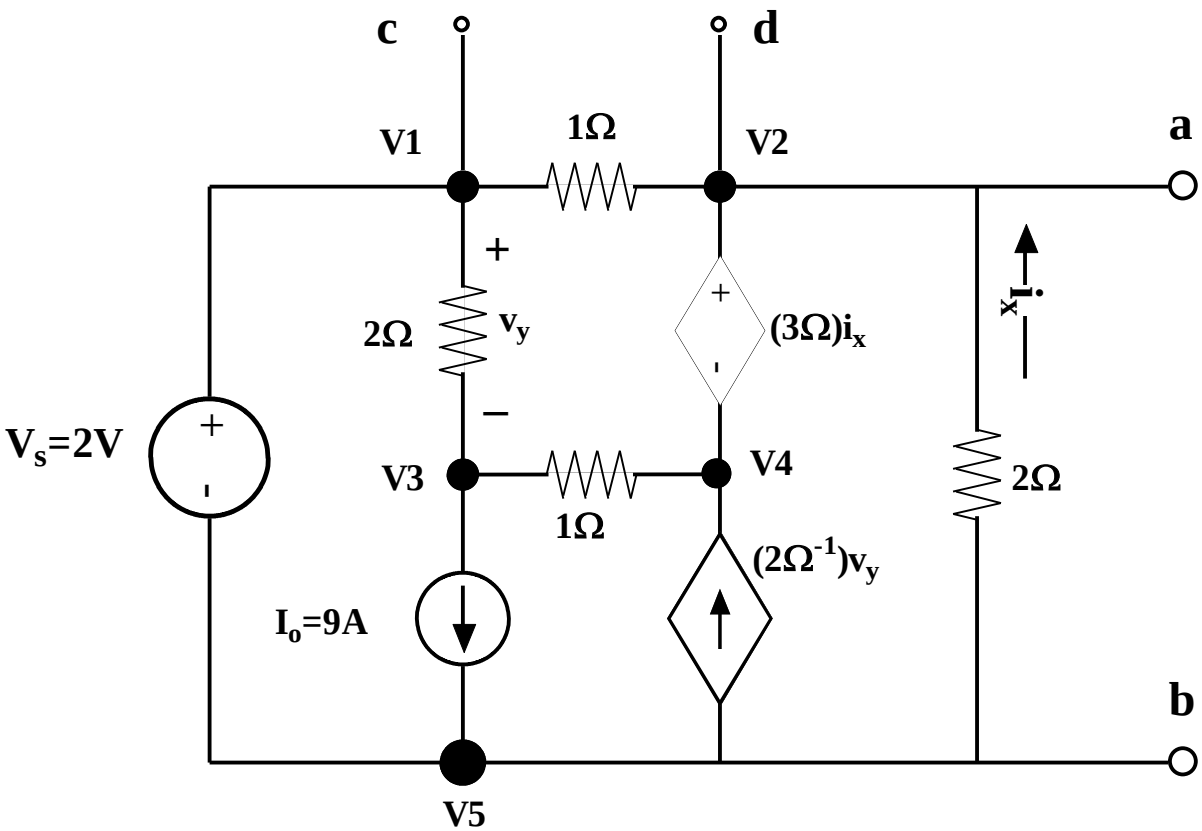

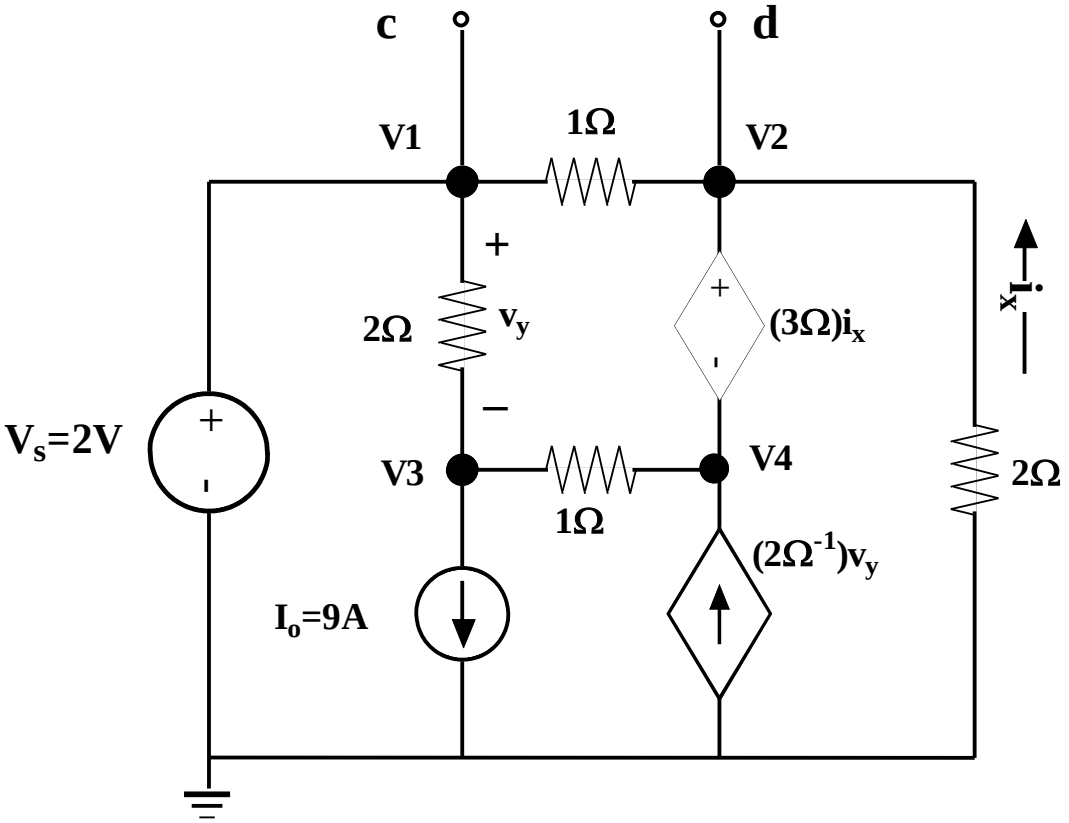
c
d
V1
1Ω
V2
+
2Ω
v_y
−
+
$(3\Omega)i_x$
i_x
V_s=2V
+
V3
1Ω
V4
2Ω
$(2\Omega^{-1})v_y$
I_o=9A

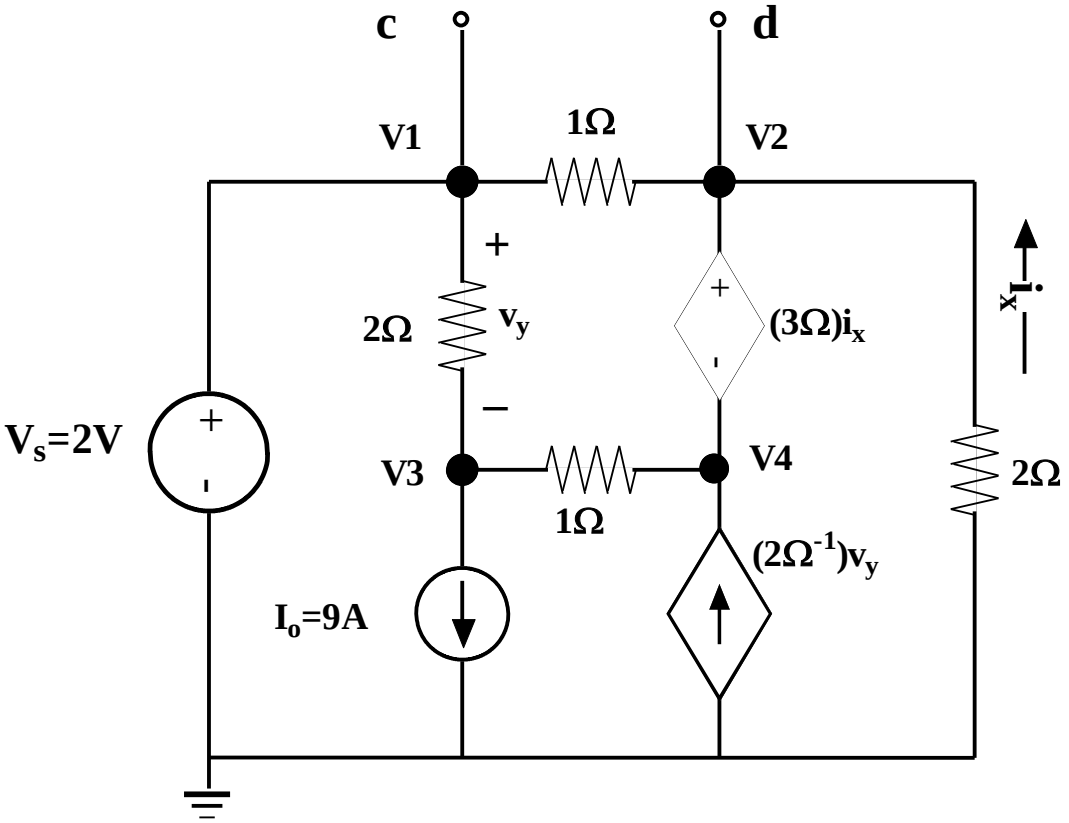
c
d
V1
1Ω
V2
+
2Ω
v_y
−
+
$(3\Omega)i_x$
i_x
V_s=2V
+
V3
1Ω
V4
2Ω
$(2\Omega^{-1})v_y$
I_o=9A

#2

#3:Get The Equivalent a&b

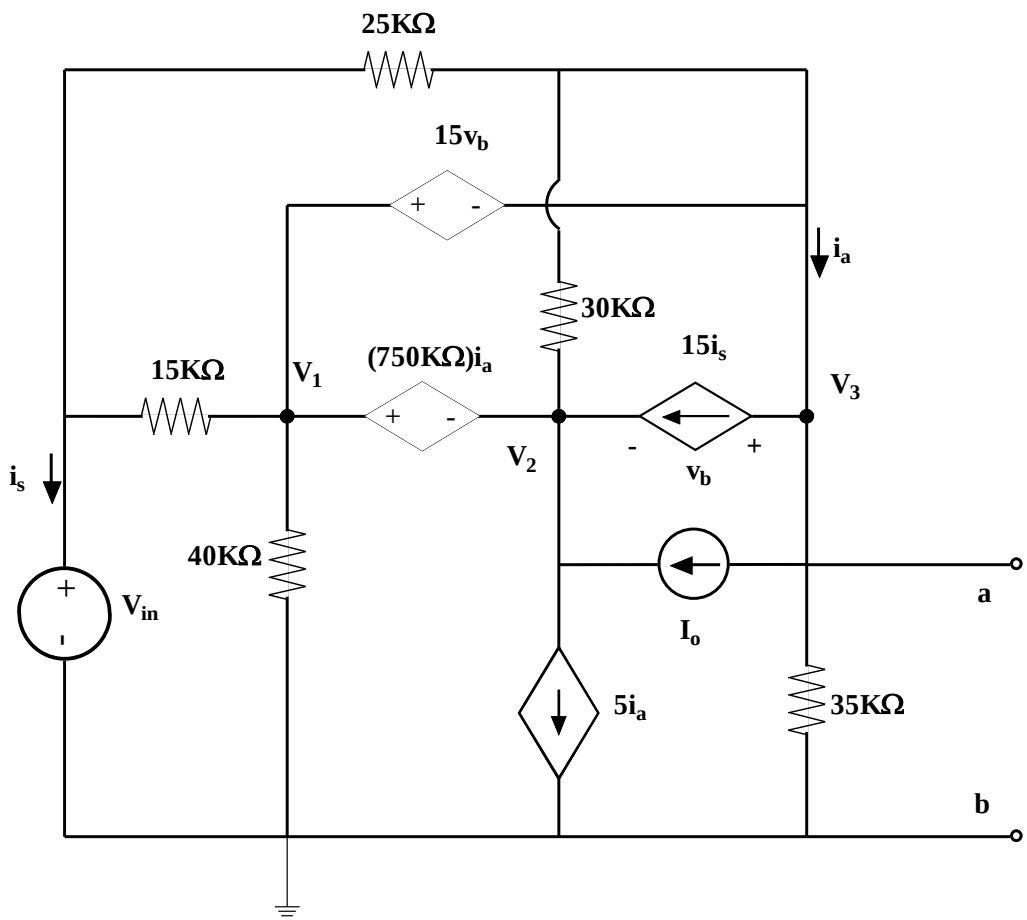

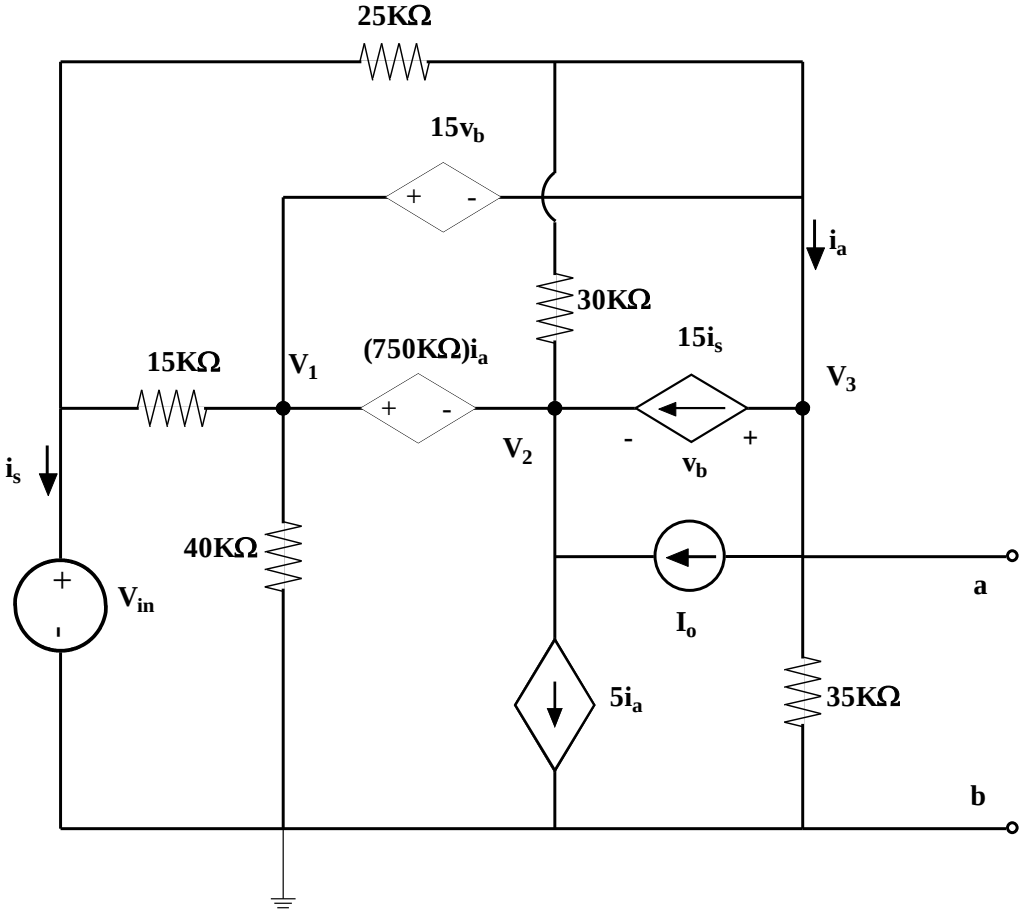
25KΩ
15v_b
+
-
i_a
30KΩ
15i_s
15KΩ
V_1
(750KΩ)i_a
V_3
+
-
V_2
-
+
v_b
i_s
40KΩ
+
V_in
-
a
I_o
5i_a
35KΩ
b

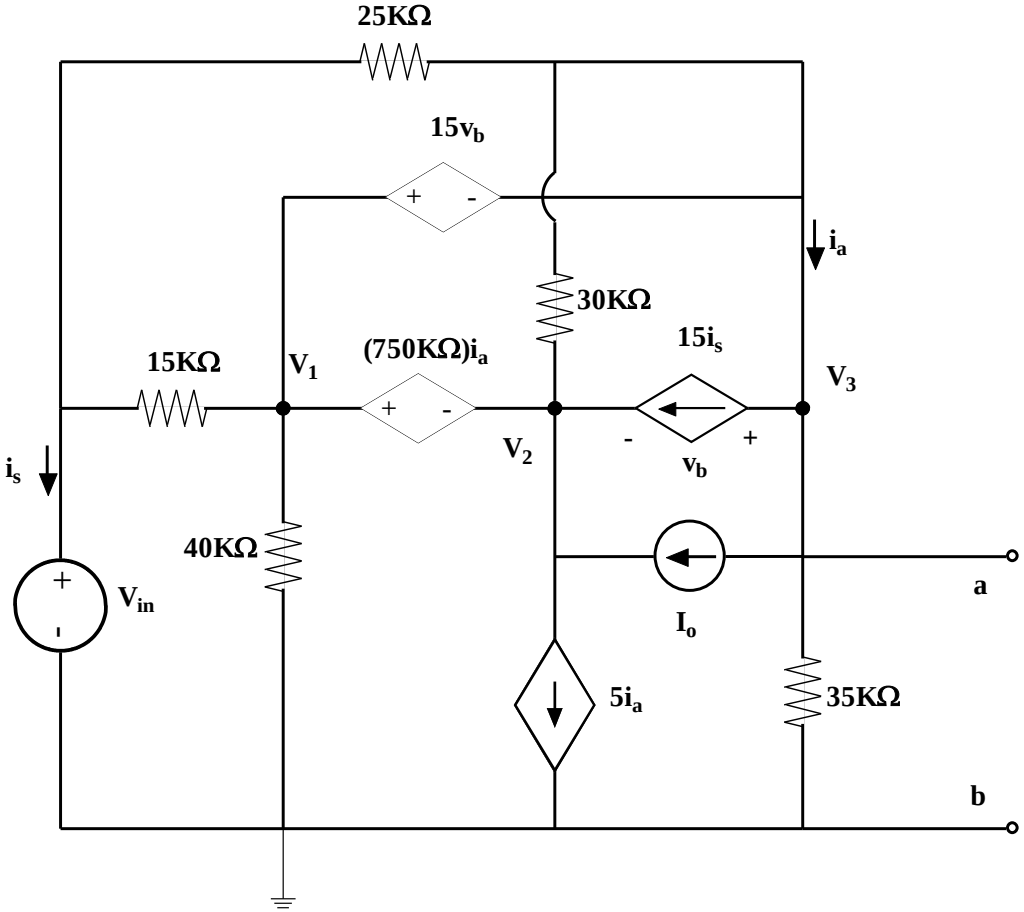
25KΩ
15v_b
+
-
i_a
30KΩ
15i_s
15KΩ
V_1
(750KΩ)i_a
V_3
+
-
V_2
-
+
v_b
i_s
40KΩ
+
V_in
-
I_o
a
5i_a
35KΩ
b

3

3

#4: Equivalent Seen by the V_{in} Source

$R_1 = 10K\Omega \quad R_2 = 20K\Omega \quad R_3 = 50K\Omega \quad R_4 = 100K\Omega$

$A = 10 \quad B = 20 \quad C = 10 \quad V_{DD} = 5V \quad I_0 = 1mA$

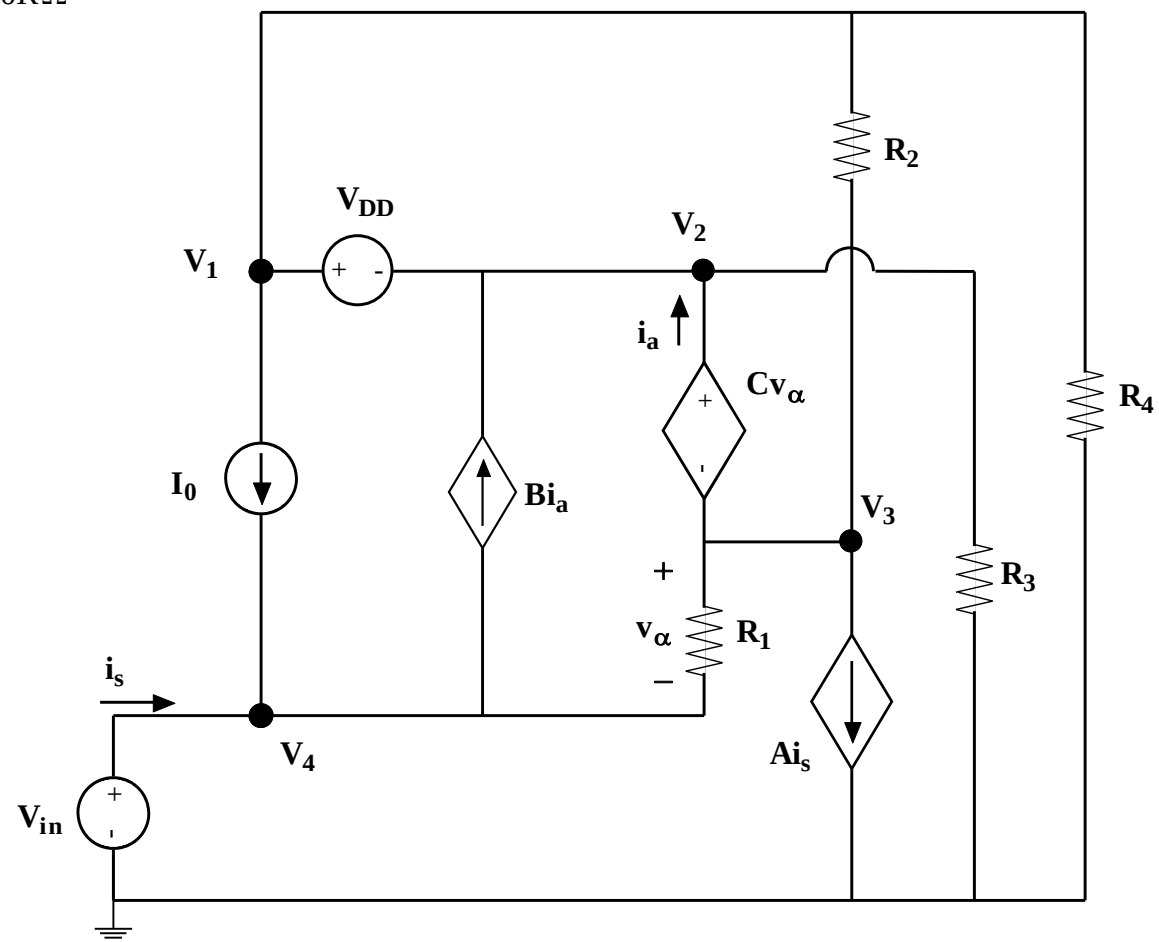

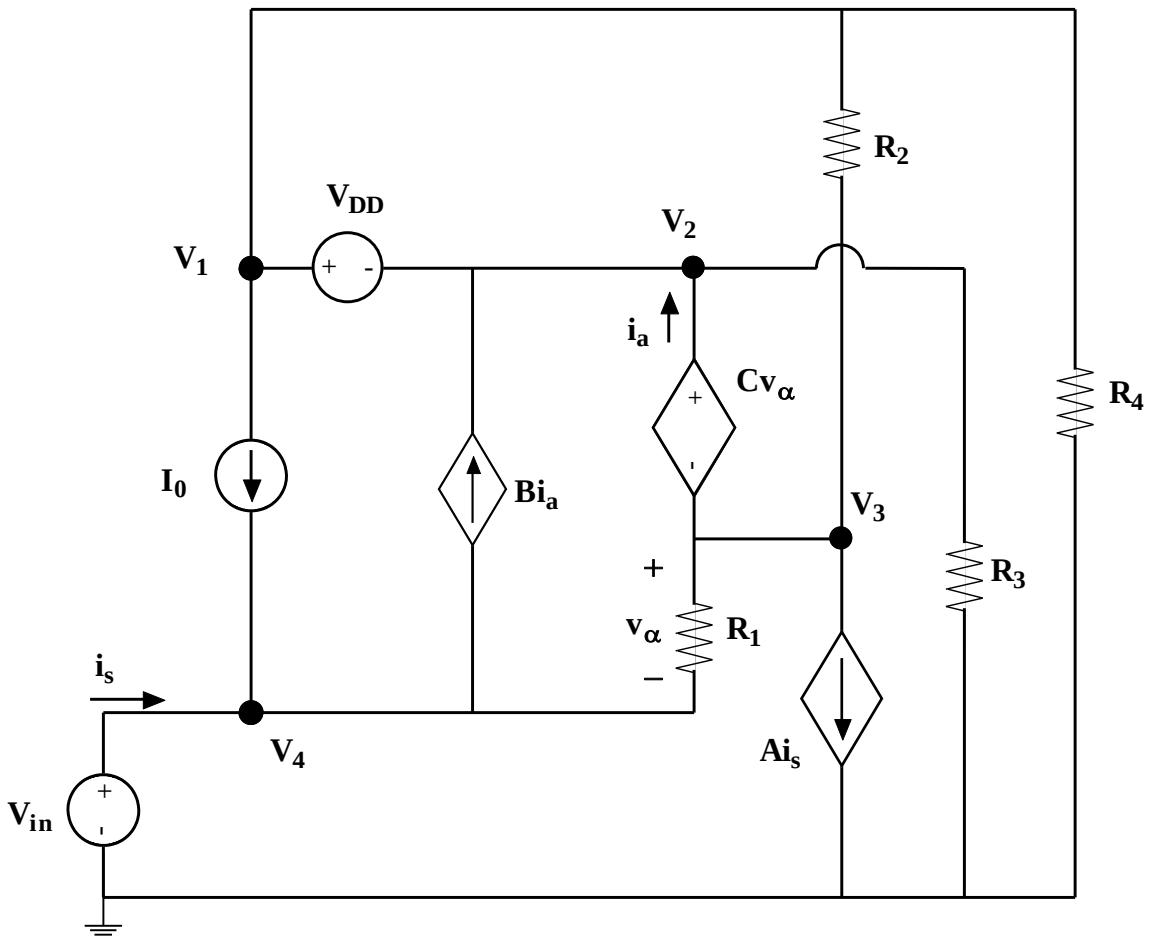
R2
VDD
V2
V1
+
-
ia
Cvα
R4
I0
Bia
V3
+
R3
vα
R1
–
is
V4
Ais
Vin

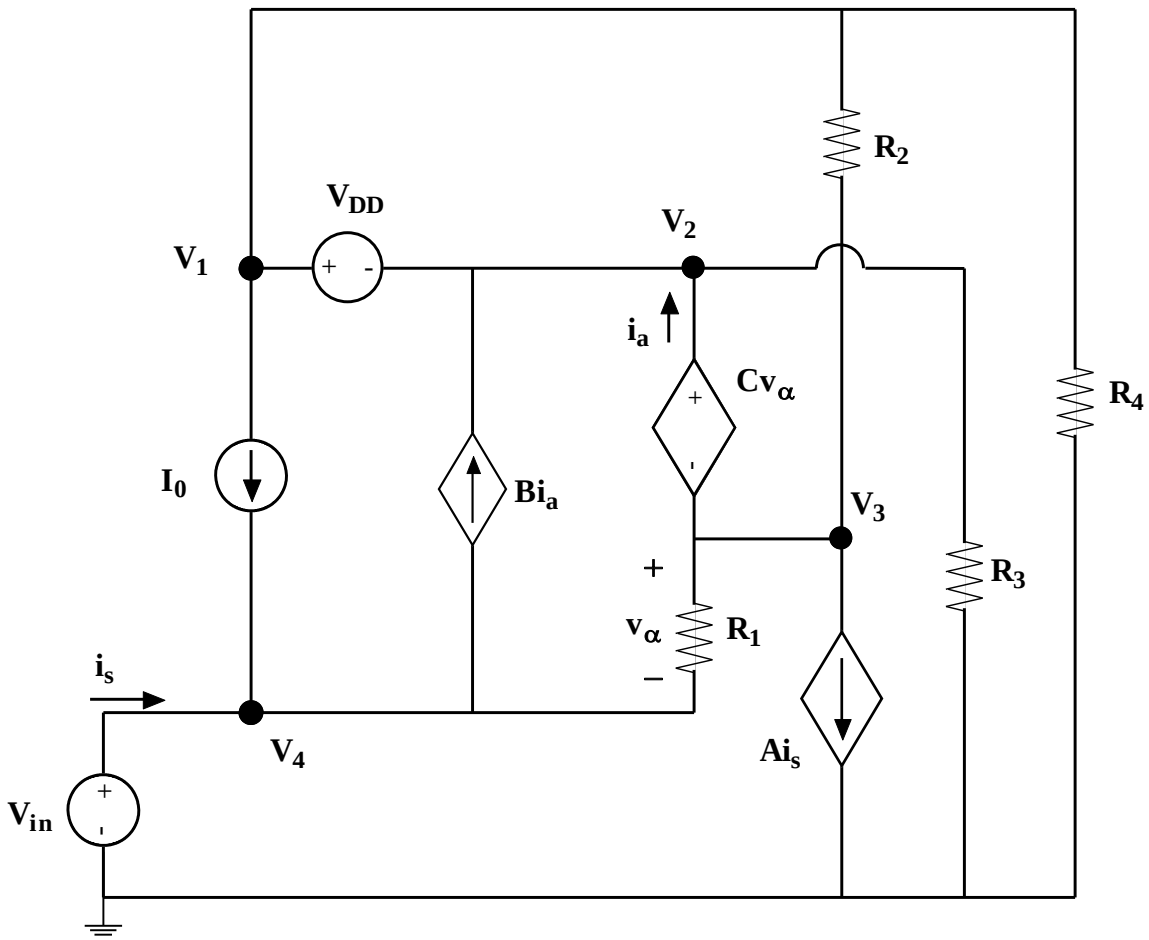
R2
VDD
V2
V1
ia
Cvα
R4
I0
Bia
V3
R3
+
vα
R1
–
is
V4
Ais
Vin

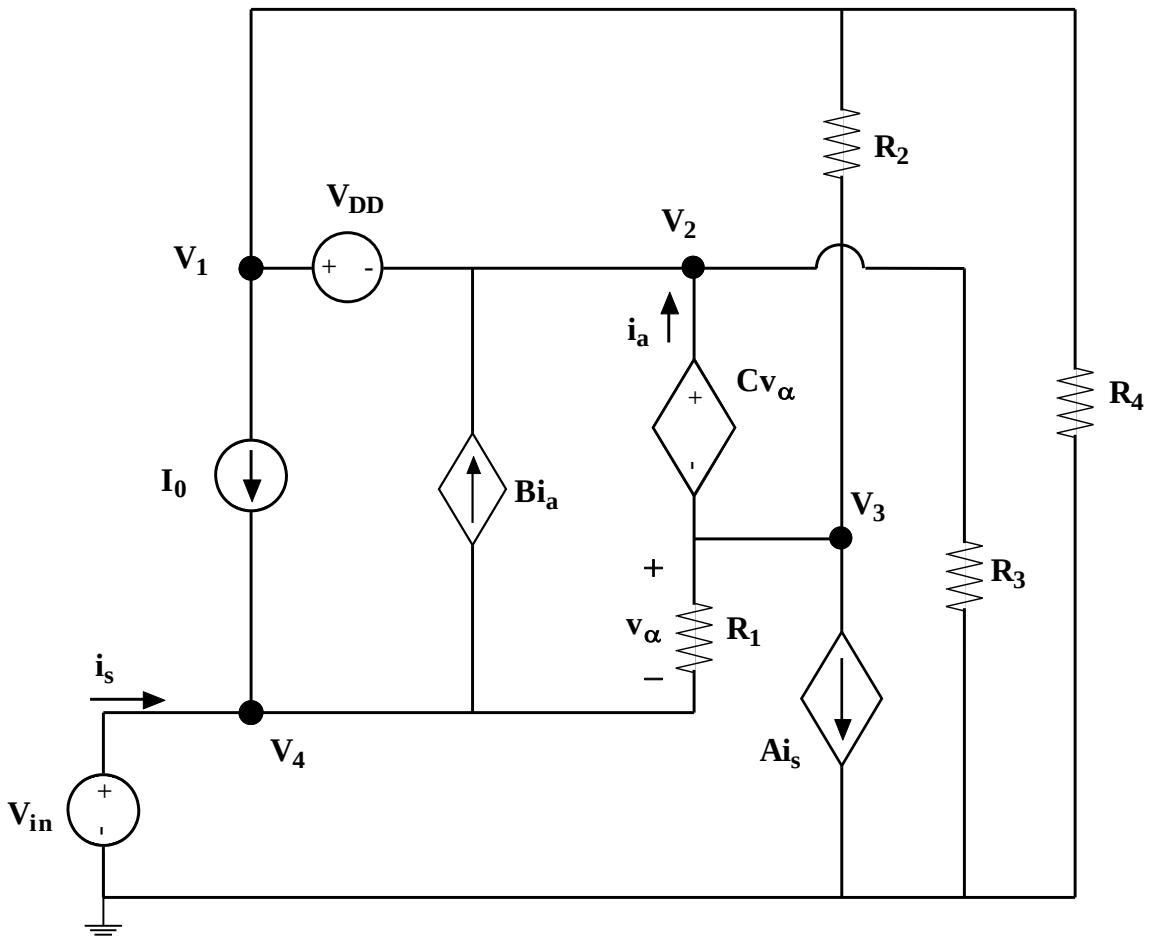
R2
VDD
V2
V1
ia
Cvα
R4
I0
Bia
V3
R3
+
vα
R1
–
is
V4
Ais
Vin

#4

#4