EECS 215 W10
Problem Set #5 Solns

1. U&M 3.77 (F, Terry Soln)

(1-1)

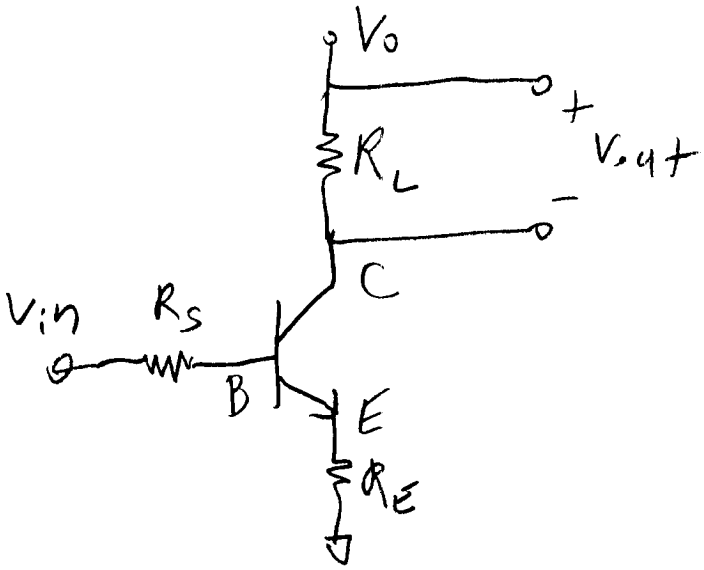

Replace

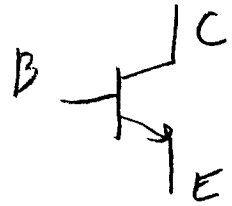

with simplified Model

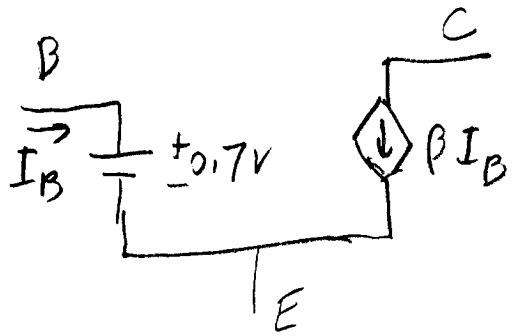

yielding simplified circuit

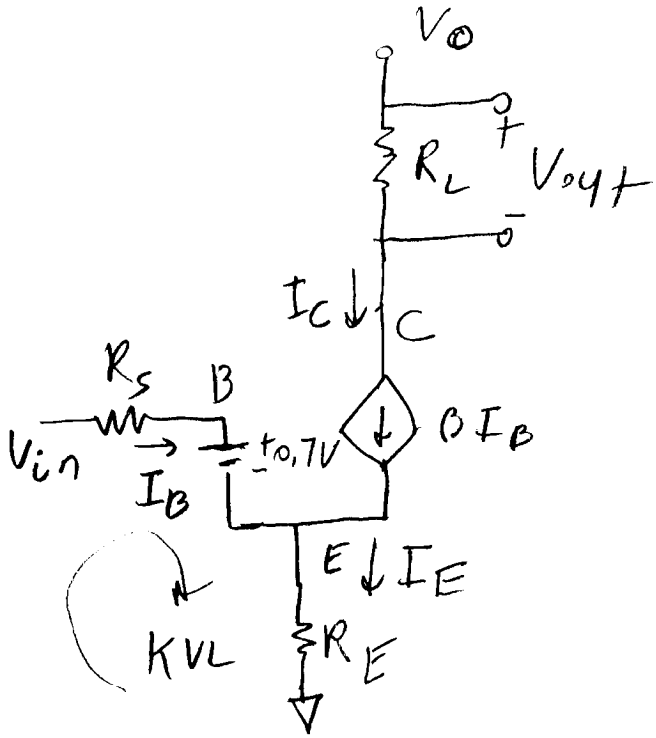

$$V_{out} = I_C R_L = \beta I_B R_L$$

By KCL $\quad I_E = I_B + I_C = I_B + \beta I_B$

$$= (\beta+1) I_B$$

By KVL

$$V_{in} = I_B R_S + I_E R_E + 0.7V$$

$$= I_B R_S + (\beta+1) I_B R_E$$

$$= I_B [R_S + (\beta+1) R_E]$$

Thus

$$I_B = \frac{(V_{in} - 0.7V)}{R_S + (\beta+1) R_E}$$

Plugging in to $V_{out} = \beta I_B R_L$
we get

$$V_{out} = \left[\frac{\beta R_L}{(\beta+1)R_E + R_S}\right](V_{in} - 0.7V)$$

this is the complete answer

If β is large, specifically if
$(\beta+1)R_E >> R_S$

then

$$V_{out} \approx \left(\frac{\beta}{\beta+1}\right)\left(\frac{R_L}{R_E}\right)(V_{in} - 0.7V)$$

$$\approx \frac{R_L}{R_E}(V_{in} - 0.7V)$$

If $V_{in} >> 0.7V$

$$V_{out} \approx \left(\frac{R_L}{R_E}\right)V_{in}$$

(the book's answer)

You can also see Sanghoon's approach on the next pages

1. USM 3.177

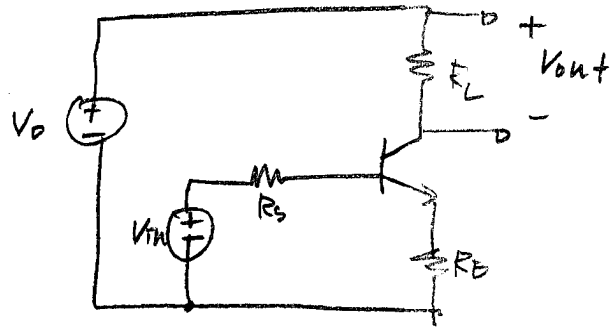

when $V_{in} \gg V_{BE}$ is given we assume $\beta = \infty$

Let's change BJT into equivalent circuit.

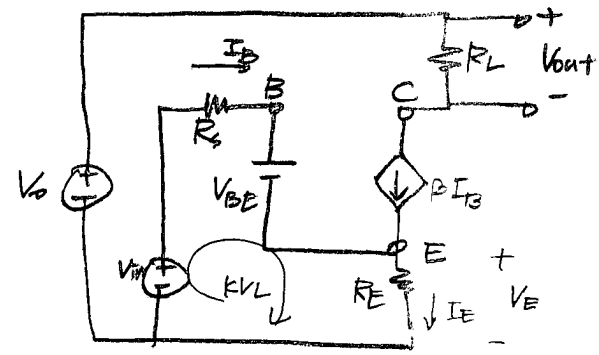

$V_{out} = \beta I_B \times R_L$.

KCL at node E $\Rightarrow$ $I_B + \beta I_B = I_E \Rightarrow I_E = (1+\beta) I_B$

$V_E = I_E R_E = (1+\beta) I_B R_E$

KVL at mesh.

$V_{in} = I_B R_s + V_{BE} + V_E = I_B R_s + V_{BE} + (1+\beta) I_B R_E$.

we have $V_{in} \gg V_{BE}$ $\rightarrow$ we can ignore V_{BE} in equation

$$\Rightarrow V_{in} \approx I_B R_s + (1+\beta) I_B R_E = I_B\left((1+\beta) R_E + R_s\right).$$

$$\Rightarrow I_B = \frac{V_{in}}{(1+\beta) R_E + R_s}$$

$$\Rightarrow V_{out} = \beta I_B \times R_L = \beta \cdot \frac{V_{in}}{(1+\beta) R_E + R_s} \cdot R_L = \frac{\beta R_L}{(1+\beta) R_E + R_s} V_{in}$$

we have very big β

$$\Rightarrow \frac{\beta R_L}{(1+\beta) R_E + R_s} V_{in} \approx \frac{\beta R_L}{(1+\beta) R_E} V_{in} \approx \frac{R_L}{R_E} V_{in}.$$

$$\Rightarrow \boxed{V_{out} \approx \frac{R_L}{R_E} V_{in}}$$

2. U&M 4.10

(a)

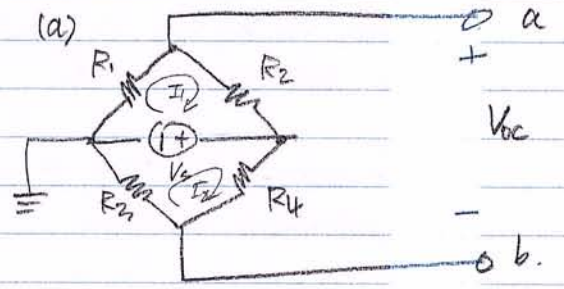

Let's set the ground ~~at~~ at the (−) node of source

Mesh 1: $I_1R_1 + I_1R_2 + V_s = 0 \rightarrow I_1 = -\frac{V_s}{R_1+R_2}$

$\rightarrow V_a = -I_1R_1 = \frac{R_1}{R_1+R_2}V_s$

Mesh 2: $V_s = (R_3+R_4)I_2 \rightarrow I_2 = \frac{V_s}{R_3+R_4} \rightarrow V_B = \frac{R_3}{R_3+R_4}V_s$

$\Rightarrow V_{ab} = V_{oc} = V_a - V_B = \frac{R_1}{R_1+R_2}V_s - \frac{R_3}{R_3+R_4}V_s = \boxed{\left(\frac{R_1}{R_1+R_2} + \frac{R_3}{R_3+R_4}\right)V_s}$

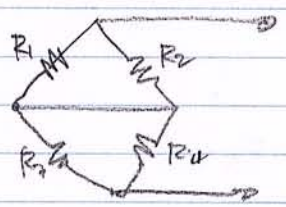

$\Rightarrow$

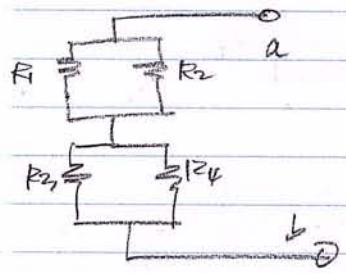

$\Rightarrow \boxed{R_{TH} = \frac{R_1R_2}{R_1+R_2} + \frac{R_3R_4}{R_3+R_4}}$

$\Rightarrow$ Thevenan Equivalent Circuit

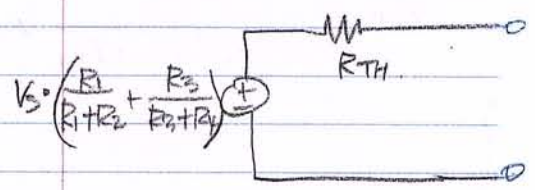

(b)

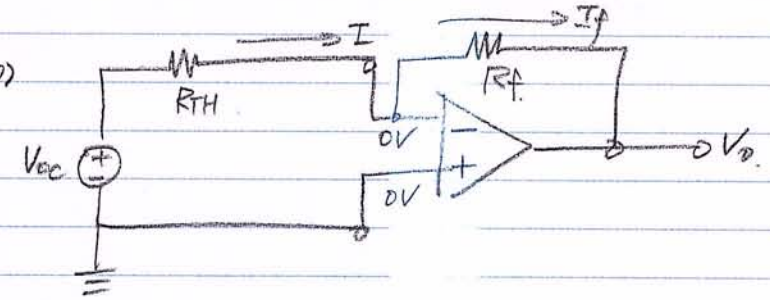

No current goes in (+) and (−) node of op-amp, $V_+ = V_- = 0V$.

$I = V_{oc}/R_{TH}$ and $I_f = I$.

$V_o = 0 - I_fR_f = -IR_f = -\frac{V_{oc}}{R_{TH}} \cdot R_f$

$$G = \frac{V_o}{V_s} = -\frac{V_{oc}}{R_{TH}} \cdot R_f \cdot \frac{1}{V_s}$$

$$= \frac{-\left(\frac{R_1}{R_1+R_2} + \frac{R_3}{R_3+R_4}\right)\cancel{V_s}}{\frac{R_1R_2}{R_1+R_2} + \frac{R_3R_4}{R_3+R_4}} \times R_f \times \frac{1}{\cancel{V_s}}$$

$$= \frac{\frac{R_1(R_3+R_4) + R_3(R_1+R_2)}{(R_1+R_2)(R_3+R_4)}}{\frac{R_1R_2(R_3+R_4) + R_3R_4(R_1+R_2)}{(R_1+R_2)(R_3+R_4)}} \times R_f$$

$$= \boxed{\frac{R_1(R_3+R_4) + R_3(R_1+R_2)}{R_1R_2(R_3+R_4) + R_3R_4(R_1+R_2)} \times R_f}$$

(c) $R_1 = R_4 = 100\Omega$, $R_2 = R_3 = 101\Omega$ $R_f = 100\Omega$

$$G = \frac{100\cdot(201) + 101\cdot(201)}{100\times101\cdot(201) + 100\times101\cdot(201)} \times 100 = 0.9950$$

3 U&M 4.11.

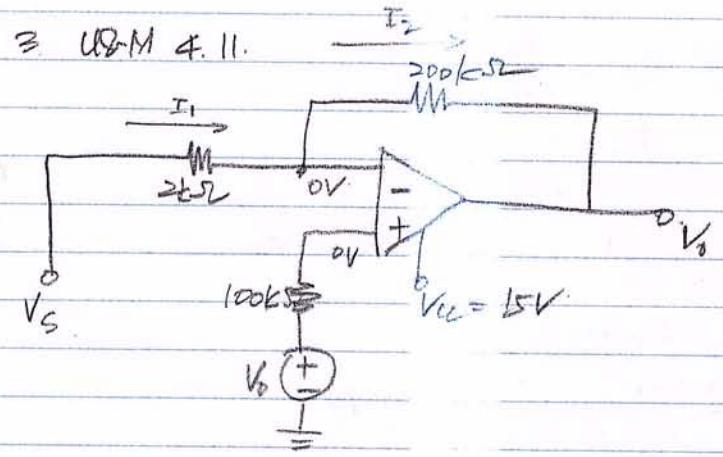

$V_o = 0V$.

No current flows in to (+) or (−) node

⇒ No current at 100kΩ resistor

⇒ $V_+ = 0V$ ⇒ $V_- = 0V$

$$I_1 = \frac{V_s - 0}{2k\Omega} = \frac{V_s}{2\times10^3}$$

$I_1 = I_2$ because no current goes in to (−) node

$$\Rightarrow V_o = 0 - 200k\Omega \times I_2 = -200\times10^3 \times \frac{V_s}{2\times10^3} = \underline{-100V_s}$$

$$\boxed{V_{out} = -100V_s}$$

$$\boxed{G = \frac{V_{out}}{V_s} = -100}$$

Linear Range $|V_o| \le |V_{cc}|$ ⇒ $|V_o| \le 15$

$$\Rightarrow \boxed{-15V \le V_o \le 15V}$$

$$\Rightarrow -15V \le -100V_s \le 15V$$

$$\Rightarrow -0.15V \le V_s \le 0.15V$$

4. UDM 4.32

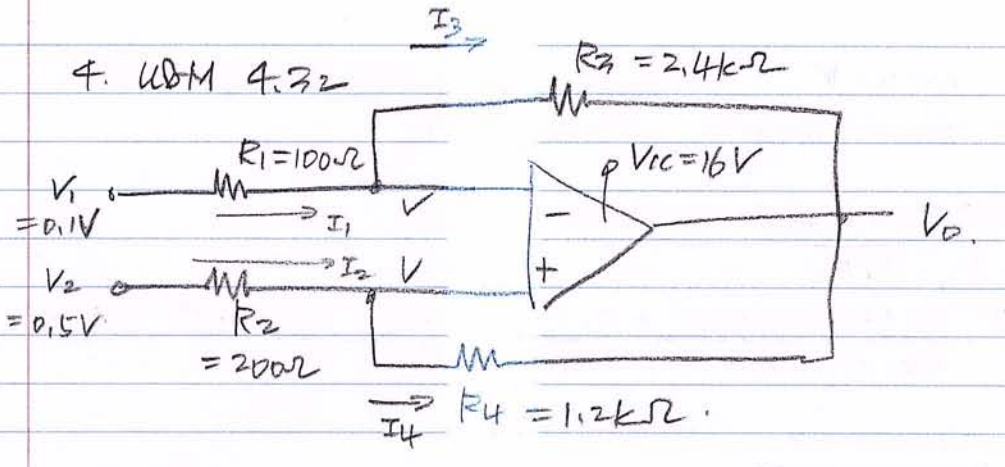

Let's set voltage at (+), and (-) node as V.

$$\Rightarrow \quad I_1 = \frac{V_1 - V}{R_1}, \qquad I_2 = \frac{V_2 - V}{R_2}$$

$$I_3 = I_1, \qquad I_4 = I_2$$

$$V_o = V - I_3 R_3 = V - I_4 R_4$$

$$\Rightarrow \quad V_o = V - \frac{V_1 - V}{R_1} R_3 = V - \frac{V_2 - V}{R_2} R_4$$

$$\Rightarrow \quad \cancel{V} - \frac{R_3}{R_1}(V_1 - V) = \cancel{V} - \frac{R_4}{R_2}(V_2 - V)$$

$$\Rightarrow \quad -\frac{R_3}{R_1} V_1 + \frac{R_3}{R_1} V = -\frac{R_4}{R_2} V_2 + \frac{R_4}{R_2} V$$

$$\Rightarrow \quad V\left(\frac{R_3}{R_1} - \frac{R_4}{R_2}\right) = \frac{R_3}{R_1} V_1 - \frac{R_4}{R_2} V_2$$

$$\Rightarrow \quad V = \frac{R_1 R_2}{R_2 R_3 - R_1 R_4} \cdot \left(\frac{R_3}{R_1} V_1 - \frac{R_4}{R_2} V_2\right) = \boxed{\frac{R_2 R_3 V_1 - R_1 R_4 V_2}{R_2 R_3 - R_1 R_4}}$$

$$I_3 = I_1 = \frac{V_1}{R_1} - \frac{V}{R_1} = \frac{V_1}{R_1} - \frac{R_2}{R_2 R_3 - R_1 R_4}\left(\frac{R_3}{R_1} V_1 - \frac{R_4}{R_2} V_2\right)$$

$$\frac{R_2 R_3 - R_1 R_4}{R_2 R_3 - R_1 R_4}$$

$$= \frac{-R_4}{R_2 R_3 - R_1 R_4} V_1 + \frac{R_4}{R_2 R_3 - R_1 R_4} V_2$$

$$= \frac{R_4}{R_2 R_3 - R_1 R_4}(V_2 - V_1)$$

$$V_o = V - I_3 R_3$$

$$= \frac{R_2 R_3 V_1 - R_1 R_4 V_2}{R_2 R_3 - R_1 R_4} - \frac{R_3 R_4 (V_2 - V_1)}{R_2 R_3 - R_1 R_4} = \boxed{\frac{V_1(R_2 R_3 + R_3 R_4) - V_2(R_1 R_4 + R_3 R_4)}{R_2 R_3 - R_1 R_4}}$$

Then $V_1 = 0.1\,V$ $V_2 = 0.5\,V$ $R_1 = 100\,\Omega$ $R_2 = 200\,\Omega$

$R_3 = 2.4\,k\Omega$ $R_4 = 1.2\,k\Omega$

$$V_o = \frac{V_1(R_2R_3 + R_3R_4) - V_2(R_1R_4 + R_3R_4)}{R_2R_3 - R_1R_4}$$

$$= \frac{0.1(200 \times 2.4 \times 10^3 + 2.4 \times 10^3 \times 1.2 \times 10^3) - 0.5 \times (100 \times 1.2 \times 10^3 + 2.4 \times 10^3 \times 1.2 \times 10^3)}{200 \times (2.4 \times 10^3) - 100 \times (1.2 \times 10^3)}$$

$$= \underline{-3.3233\,V}$$

4. U8-M 4.42

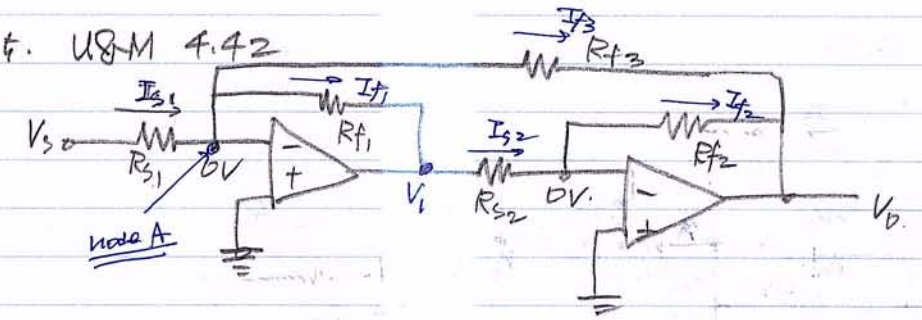

$$I_{s1} = \frac{V_s}{R_{s1}} \qquad I_{f3} = \frac{0 - V_o}{R_{f3}} = -\frac{V_o}{R_{f3}}$$

$$I_{f2} = \frac{0 - V_o}{R_{f2}} = -\frac{V_o}{R_{f2}}$$

$I_{s2} = I_{f2}$ because no current flows in (-) node

$$V_1 = 0 + I_{s2} R_{s2} = I_{s2} R_{s2} = -\frac{V_o}{R_{f2}} \cdot R_{s2}$$

$$I_{f1} = \frac{0 - V_1}{R_{f1}} = \frac{1}{R_{f1}}\left(\frac{V_o}{R_{f2}} \cdot R_{s2}\right) = \frac{R_{s2}}{R_{f1} R_{f2}} V_o.$$

KCL at node A

$$\Rightarrow I_{s1} = I_{f1} + I_{f3} \Rightarrow \frac{V_s}{R_{s1}} = \frac{R_{s2}}{R_{f1} R_{f2}} V_o + \left(-\frac{V_o}{R_{f3}}\right)$$

$$\Rightarrow \frac{V_s}{R_{s1}} = \left(\frac{R_{s2}}{R_{f1} R_{f2}} - \frac{1}{R_{f3}}\right) V_o = \left(\frac{R_{s2} R_{f3} - R_{f1} R_{f2}}{R_{f1} R_{f2} R_{f3}}\right) V_o$$

$$\Rightarrow V_o = \left(\frac{R_{f1} R_{f2} R_{f3}}{R_{s2} R_{f3} - R_{f1} R_{f2}}\right) \times \frac{1}{R_{s1}} \times V_s.$$

6. U8M 4.43

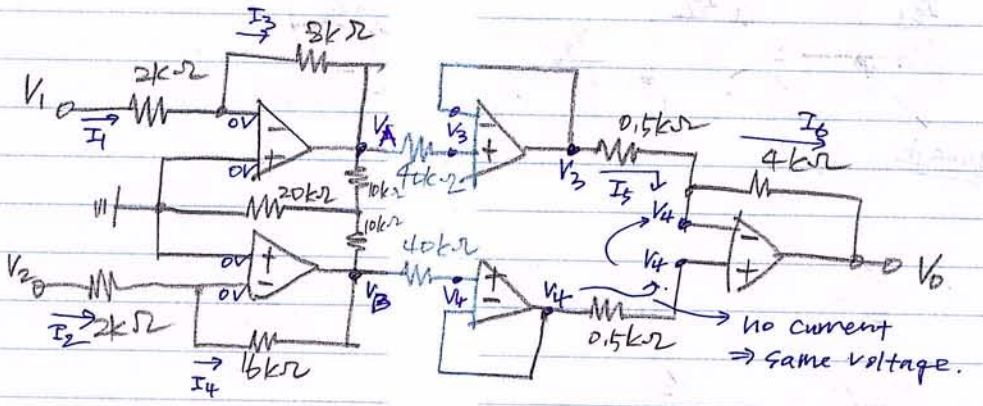

$$I_1 = \frac{V_1}{2k\Omega} = \frac{V_1}{2\times10^3} \qquad I_3 = I_1.$$

$$I_2 = \frac{V_2}{2k\Omega} = \frac{V_2}{2\times10^3} \qquad I_4 = I_2$$

$$V_A = -I_3 \times 8k\Omega = -I_1 \times 8k\Omega = -4V_1$$
$$V_B = -I_4 \times 16k\Omega = -I_2 \times 16k\Omega = -8V_2$$

$V_3 = V_A$ and $V_4 = V_B$ (no current!)

$$I_5 = \frac{V_3 - V_4}{0.5k\Omega} = \frac{V_A - V_B}{0.5k\Omega} = \frac{-4V_1 - (-8V_2)}{0.5k\Omega} = \frac{8V_2 - 4V_1}{0.5k\Omega}$$

$I_6 = I_5$

$$V_0 = V_4 - I_6 \times 4k\Omega = V_B - I_5 \times 4k\Omega = -8V_2 - \frac{8V_2 - 4V_1}{0.5k\Omega} \times 4k\Omega$$

$$= -8V_2 - (8V_2 - 4V_1) \times 8 = -8V_2 - 64V_2 + 32V_1$$

$$= \boxed{32V_1 - 72V_2}$$

6. a) Find the Thevenin equivalent of this circuit:

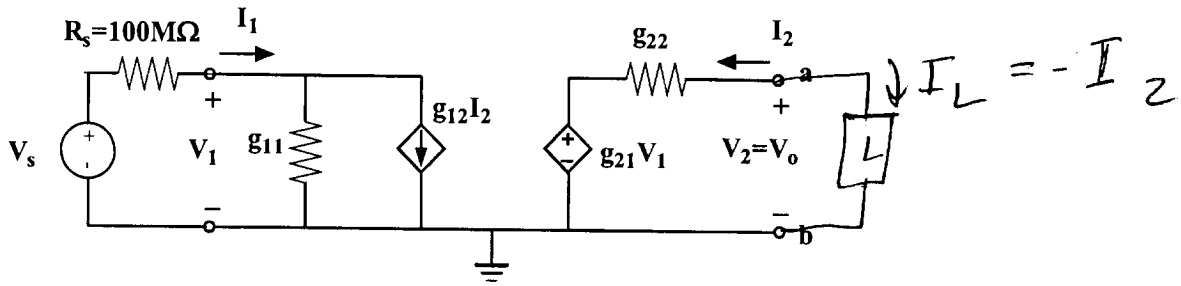

KCL at V_1 node (out of node)

$$\frac{V_1 - V_s}{R_s} + g_{11}V_1 + g_{12}I_2 = 0 \qquad (g_{11} \text{ is a conductance})$$

$$V_1\left(g_{11} + \frac{1}{R_s}\right) + g_{12}I_2 = \frac{V_s}{R_s} \qquad (E1)$$

KCL at output node ($V_2 = V_o$, a)

$$\frac{V_o - g_{21}V_1}{g_{22}} - I_2 = 0 \qquad (E2)$$

$$\Rightarrow V_o - g_{21}V_1 - g_{22}I_2 = 0$$

$$\Rightarrow V_1 = \frac{1}{g_{21}}V_o - \frac{g_{22}}{g_{21}}I_2$$

Plug back into (E1)

$$\left(\frac{1}{g_{21}}V_o - \frac{g_{22}}{g_{21}}I_2\right)\left(g_{11} + \frac{1}{R_s}\right) + g_{12}I_2 = \frac{V_s}{R_s}$$

$$\left(\frac{g_{11}}{g_{21}} + \frac{1}{R_s g_{21}}\right)V_o = \frac{V_s}{R_s} + \left[\left(\frac{g_{22}}{g_{21}}\right)\left(g_{11} + \frac{1}{R_s}\right) - g_{12}\right]I_2$$

$$\left(\frac{g_{11}R_S+1}{g_{21}R_S}\right)V_o = \frac{1}{R_S}V_S + \left[g_{22}\left(\frac{g_{11}R_S+1}{g_{21}R_S}\right) - g_{12}\right]I_2$$

$$\Rightarrow V_o = \left(\frac{g_{21}}{1+g_{11}R_S}\right)V_S + \left[g_{22} - \left(\frac{g_{12}g_{21}R_S}{g_{11}R_S+1}\right)\right]I_2$$

So our general Thevenin Equivalent is

$$\left[g_{22} - \frac{g_{12}g_{21}R_S}{g_{11}R_S+1}\right] = R_{eff}$$

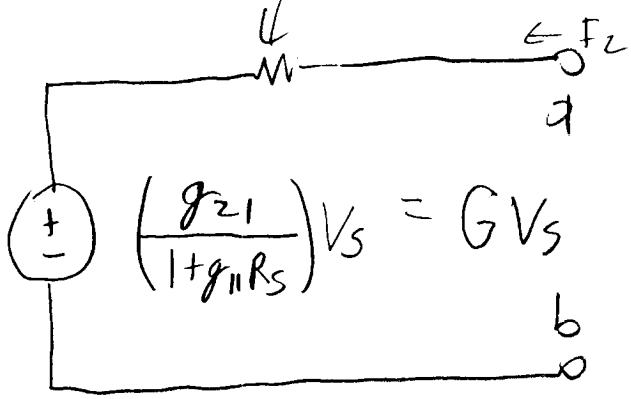

Note this matches our equation above

I derived this generally & without computer help. You could also use the approach of 1st finding $V_{oc} = V_{TH}$. This would be equivalent to the previous analysis but taking $I_2 = 0$ (open circuit).

We could then go for either $I_N = I_{sc}$ or R_{eq}. I will do R_{eq}

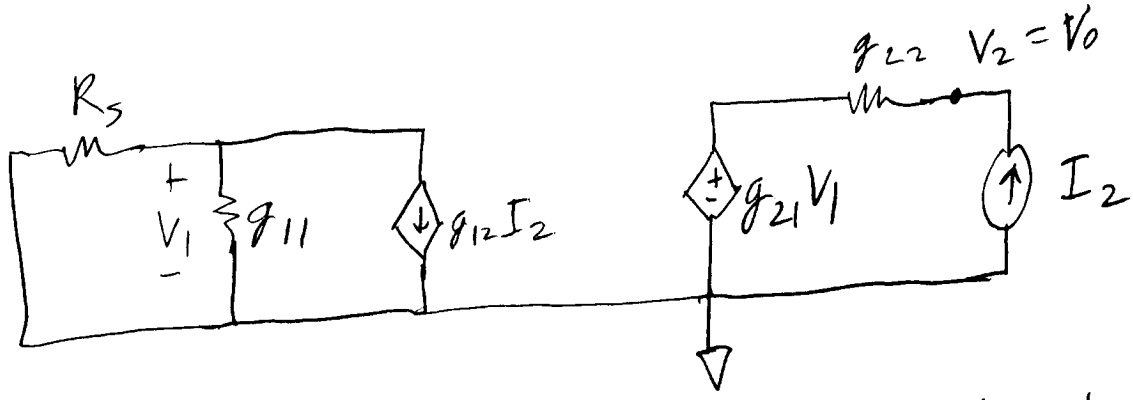

$$V_1 = -g_{12} I_2 / (g_{11} + 1/R_s)$$ (current/conductance)

$$V_2 = g_{21} V_1 + g_{22} I_2$$ KVL + ohm's Law

$$= \left(\frac{-g_{12} g_{21}}{g_{11} + 1/R_s} + g_{22} \right) I_2$$

$$\frac{V_2}{I_2} = R_{eq} = g_{22} - \frac{g_{12} g_{21}}{g_{11} + 1/R_s}$$

$$= \left[g_{22} - \frac{g_{12} g_{21} R_s}{g_{11} R_s + 1} \right]$$ (same as prior result)

<u>Comment:</u>

g_{12} is negative for this configuration, so the effect of this output-to-input coupling is to (slightly) raise the output resistance. It does not effect the open circuit voltage gain.

Now let's get some numbers
with $R_i = 2M\Omega$ $R_o = 75\Omega$

$A = 2 \times 10^5$

$R_1 = 990 K\Omega$ $R_2 = 10 K\Omega$

I get

$g_{11} = 2.4989 \times 10^{-10}\ \Omega^{-1}$ $(r_{11} = 4.0017\ G\Omega)$

$g_{12} = -1.8741 \times 10^{-10}$ (A/A)

$g_{21} = 99.9498$

$g_{22} = 37.67\ m\Omega$

Yielding

$G \cong 97.513$ (open circuit gain)

$R_{eff} = 1.8651\ \Omega$

$$\% G_{error} = \left(\frac{G - 100}{100}\right) * 100$$

$$= -2.487\%$$

b) If we ignore ($g_{12} \to 0$)

We get

$G = 97.513$ (unchanged)

$R_{eff} = g_{22} = 37.67\ m\Omega$
(big change)

$\% G = -2.487\%$ (unchanged)

Big Effect of neglecting g_{12} is on the output resistance R_{eff}

c) Using the work of (a), I get for a unity gain buffer amp ($R_1 = 0$, $R_2 \to \infty$)

$g_{11} = 2.4999987 \times 10^{-12}\ \Omega^{-1}$
($r_{11} = 4.00 \times 10^{11}\ \Omega = 400\ G\Omega$)

$g_{12} = -1.87499 \times 10^{-10}$

$g_{21} = 0.999995$

$g_{22} = 3.74998 \times 10^{-4}\ \Omega$

$\Rightarrow$ $\boxed{G_1 = 0.999745 \quad R_{eff1} = 19.12\ m\Omega}$

d) Now we have

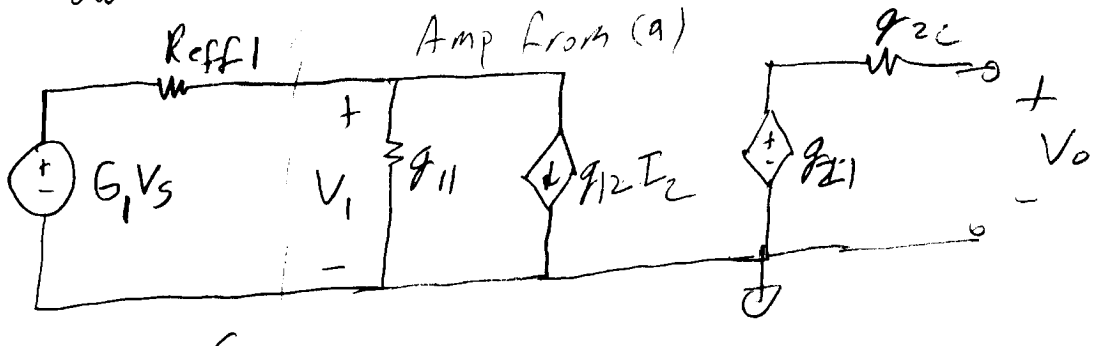

unity gain Thevenin Equiv

g_{11}, etc for 2nd amp from (a)

so $G_{total} = G_1 G_2$

$$G_2 = \frac{g_{21}}{1+g_{11}R_{eff1}} = 99.94977$$

$$G = G_1 G_2 = 99.9243$$

$$\%G_{err} = -0.0757\%$$

$R_{eff2} = 37.67\,m\Omega$

(g_{12} effect is small since R_{eff1} has replaced R_S

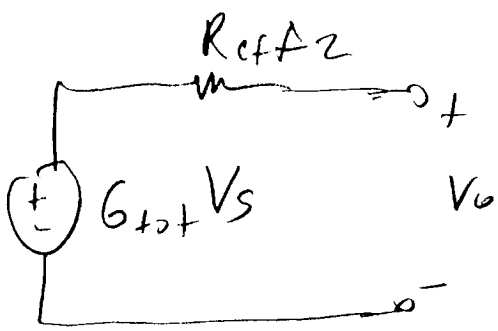

e) Now we load with a 1KΩ Resistor

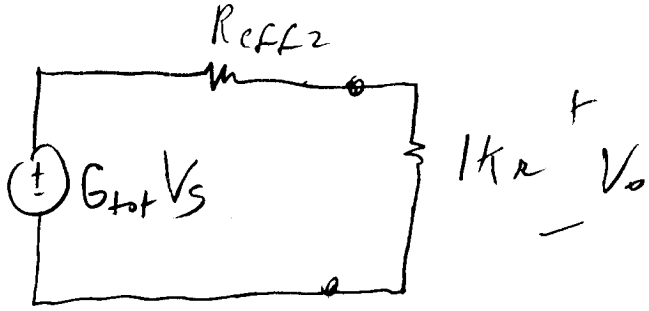

$$\frac{V_o}{V_s} = G_{tot}\left(\frac{1K\Omega}{1K\Omega + R_{eff2}}\right)$$

$$\simeq 99.205$$

$$\%G_{err} = -0.07947\%$$

Very slight effect due to <u>very low</u> <u>Reff2</u>