EECS 215: Introduction to Electronic Circuits WN 2010
Problem Set 7

Issued: 2/26/10

Due: 3/12/10, **9:30 AM** **Note: Problem sets are DUE at the start of lecture on Friday mornings. Do not skip class to work on homework further. Your paper may not be accepted.**

U&M refers to a problem from Ulaby and Maharbiz.

This assignment is not that bad; however, making a good start before Thursday, 2/25/10 is highly advised.

Problems:

1. Rise time, t_r, is usually defined from the 10% to 90% points of a transient response to a step. Assume we have a source $V_{in}(t)=1Vu(t)$, a source resistance $R_s=1K\Omega$, and load capacitance of $C_L=1nF$ (circuit below). Find $V_c(t)$ for $t\geq 0$ and find the rise time.

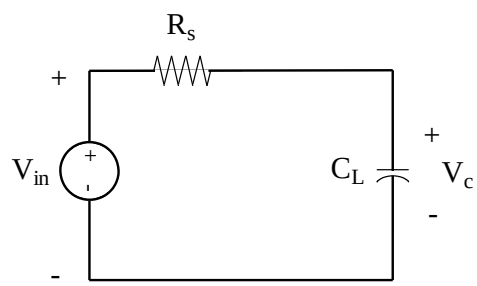

2. Now the source is buffered by a BJT common collector amp as shown below. Find $V_c(t)$ for $t\geq 0$ and find the rise time. Assume our standard linear model for the BJT in forward active mode operation.

$$R_S = R_E = 1K\Omega \quad \beta_F = 100 \quad V_{cc} = +12V$$

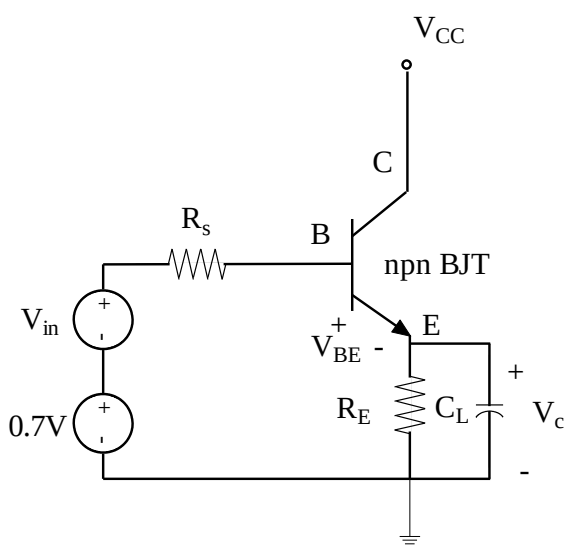

3. For the circuit below:

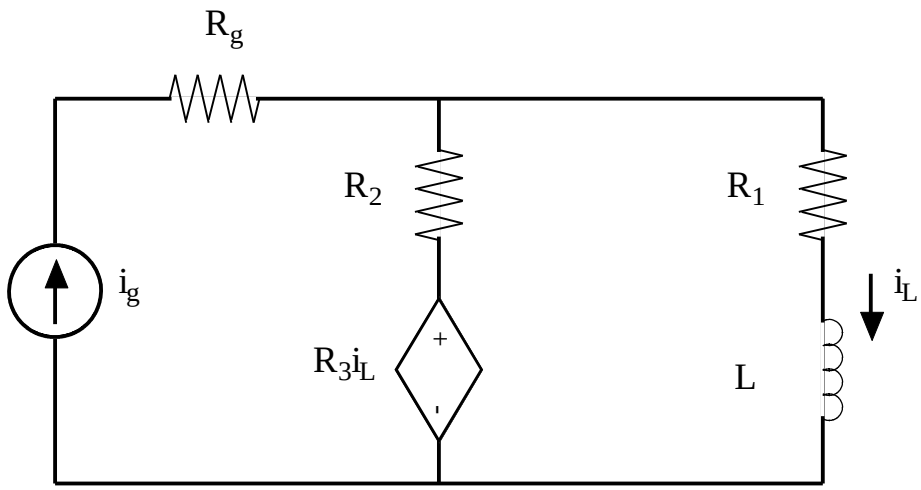

a) Find the differential equation that relates $i_L(t)$ to $i_g(t)$

b) Now assume L=1 H, $R_1=R_2=R_g=10\Omega$, and $R_3=5\ \Omega$. Find $i_L(t)$ for $t\geq 0$ if

$$i_g(t) = (1A)u(t) + (-2A)u(t-0.2s)$$

Plot your result using Matlab or another good scientific plotting program for $-0.2s \leq t \leq 0.8s$

4. U&M 5.50
5. U&M 5.51
6. U&M 5.59
7. U&M 5.63

EECS 215 WN10
Problem Set # 7 Solutions

1. $V_c(t) = (1V)(1-e^{-t/\tau}) \quad t \geq 0$

where $\tau = RC = (1k\Omega)(1nF) = 1\mu s$

This is the basic RC circuit. If you did not get this part easily, please see your professor's help immediately,

t_r = 10% to 90% time, so here 0.1 V to 0.9V

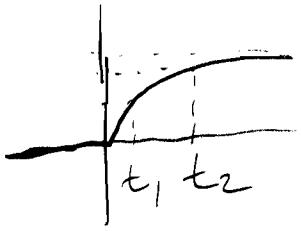

$$0.1V = (1V)(1-e^{-t_1/\tau})$$

$$-0.9 = -e^{-t_1/\tau}$$

$$\Rightarrow t_1 = -\tau \ln(0.9)$$

Similarly $t_2 = -\tau \ln(0.1)$

$$t_r = t_2 - t_1 = \tau[-\ln(0.1) + \ln(0.9)]$$

$$= \tau \ln\left(\frac{0.9}{0.1}\right) = \tau \ln 9 \approx (2.197)\tau$$

$\boxed{\text{Here } t_r \approx 2.197\mu s}$

2. From Midterm 2 (see detail solutions) we had the follow the Thevenin Equivalent for the BJT circuit connected to the Capacitor

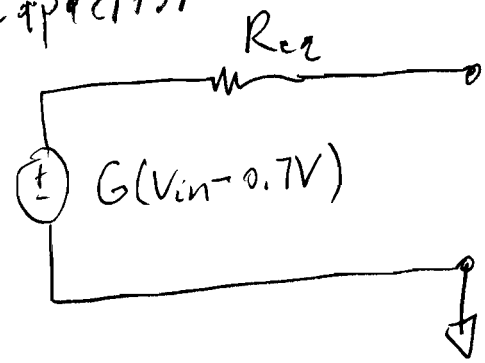

$$G = \frac{(\beta+1)R_E}{R_S + (\beta+1)R_E} = \frac{101}{102} \simeq 0.9902$$

$$R_{eq} = \frac{R_S R_E}{R_S + (\beta+1)R_E} = \frac{1k\Omega}{102} \simeq 9.804\,\Omega$$

Now we replace V_{in} above by $(V_{in} + 0.7V)$ in this problem statement. So we now have

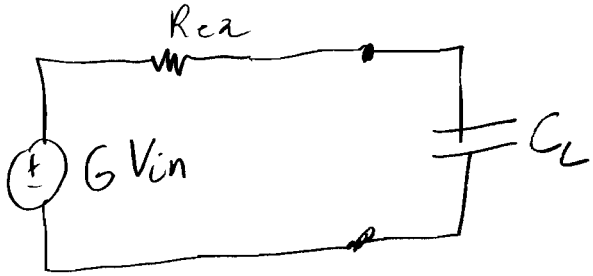

$$\tau_2 \equiv R_{eq} C_L \simeq 9.8\,ns$$

so now

$$V_c(t) = G(1V)\left(1 - e^{-t/\tau_2}\right) \qquad t \geq 0$$

$$V_C \approx (0.9902V)(1 - e^{-t/\tau_2}) \qquad \tau_2 = 9.804\ ns$$
$$t \geq 0$$

$$\boxed{t_{r,2} = \tau_2 \ln 9 \approx 21.54\ ns}$$

Note that this is ~ 102 X faster than problem 1

This illustrates directly why a unity gain buffer amplifier is useful, even in a digital circuit

3. (a) Find the Norton Equivalent Seen by the inductor

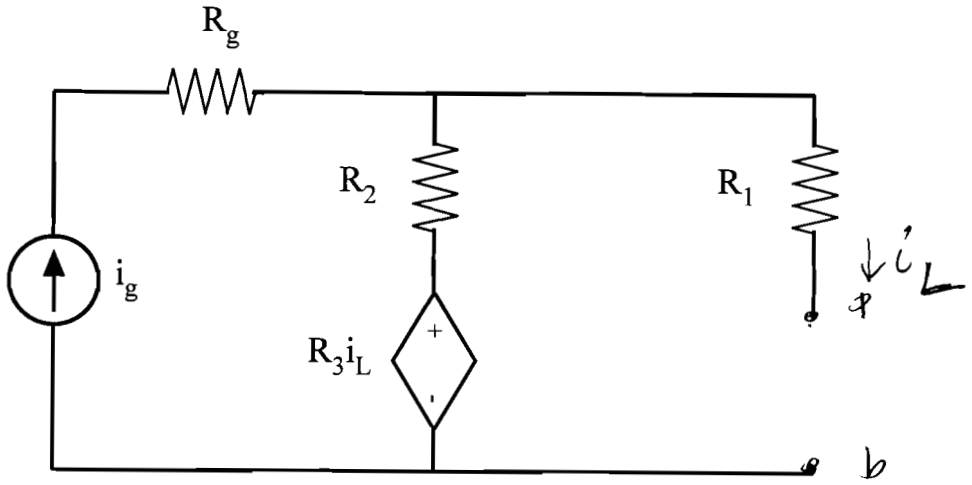

V_{oc}? $i_L = 0$ so

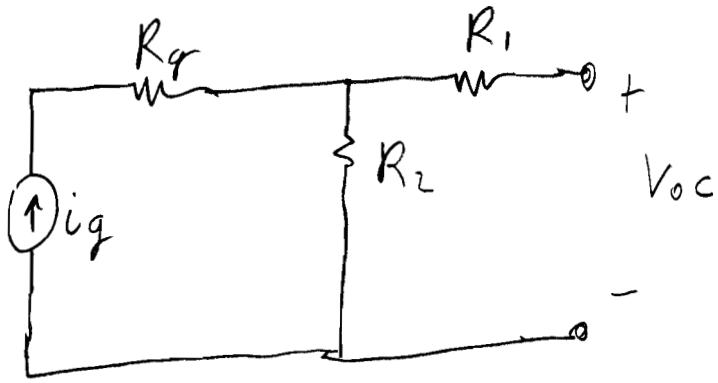

$$V_{oc} = i_g R_2 = V_{TH}$$

$I_{sc} = I_N$? One case where mesh analysis is easy

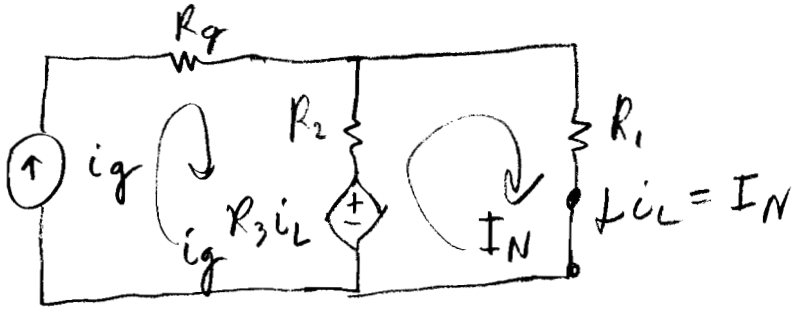

1 loop for KVL

$$-R_3 i_L + (I_N - i_g) R_2 + I_N R_1 = 0$$

$$-R_3 I_N + (I_N - i_g) R_2 + I_N R_1 = 0$$

$$I_N (R_1 + R_2 - R_3) = R_2 i_g$$

$$I_N = \left[\frac{R_2}{R_1 + R_2 - R_3}\right] i_g$$

$$R_{eq} = V_{TH} / I_N = (R_1 + R_2 - R_3)$$

(also easy to get by turning of i_g + applying a test source)

so

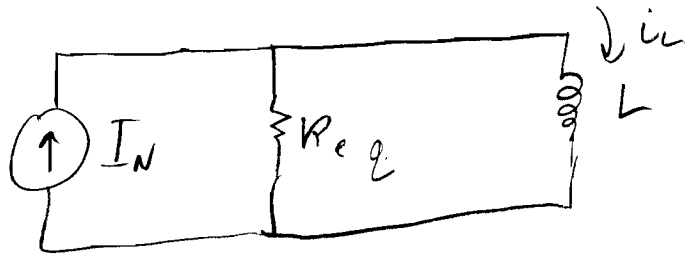

will let us solve for i_L

$$I_N = \frac{v_L}{R_{eq}} + i_L = \frac{L}{R_{eq}} \frac{di_L}{dt} + i_L$$

or

$$\frac{di_L}{dt} + \left(\frac{R_{eq}}{L}\right) i_L = \left(\frac{R_{eq}}{L}\right) I_N$$

$$\frac{di_L}{dt} + \frac{(R_1 + R_2 - R_3)}{L} i_L = \frac{(R_1 + R_2 - R_3)}{L} \left(\frac{R_2}{R_1 + R_2 - R_3}\right) i_g$$

$$\boxed{\frac{di_L}{dt} + \left(\frac{R_1+R_2-R_3}{L}\right) i_L = \frac{R_2}{L} i_g}$$

b) With $L = 1H$ $R_1 = R_2 = R_g = 10\Omega$ & $R_3 = 5\Omega$

we have

$$\frac{di_L}{dt} + (15 s^{-1}) i_L = (10 s^{-1}) i_g$$

$$i_g = [u(t) - 2u(t-0.2s)] (1A)$$

$t < 0$ $i_g = 0 \Rightarrow i_L = 0$

$0 \le t < 0.2s$

$i_L(0) = 0$ Boundary condition

$i_{Lf} = \frac{10}{15} A = (\frac{2}{3} A)$ both from the differential eqn & from $\underline{\underline{I_N}}$ (circuit)

So

$$i_L(t) = (\tfrac{2}{3} A)[1 - e^{-(15 s^{-1})t}]$$

$t \ge 0.2s$

$$i_L(0.2s) = (\tfrac{2}{3} A)[1 - e^{-(15 s^{-1})(0.2s)}]$$

$$= (\tfrac{2}{3} A)(1 - e^{-3}) \approx 0.633475A$$

$i_{Lf} = I_N = \left(-\frac{4}{3}A\right) + i_{Ln} = Be^{-(15s^{-1})(t-0.2s)}$

so B.C. matching

$i_L(0.2s) = -\frac{4}{3}A + B$

$\Rightarrow B = \frac{4}{3}A + i_L(0.2s) \approx 1.96681\ A$

& $i_L(t) = \left(-\frac{4}{3}A\right) + Be^{-(15s^{-1})(t-0.2s)}$

for $t \geq 0.2s$

matlab code + plot follows