1.(a) U&M 2.52

Refer to Figure 2-35 for diode characteristic.

P.64-65 is helpful to review.

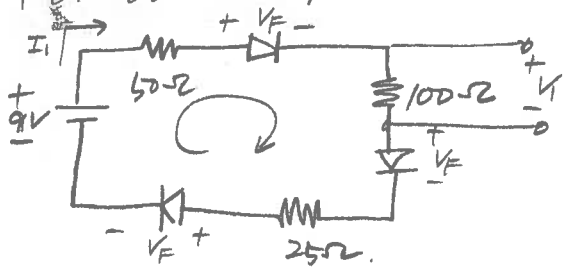

Use KVL around the loop.

$$9V = I_1 \times 50 + V_F + I_1 \times 100 + V_F + I_1 \times 25 + V_F$$

$$= I_1 \times 175 + 3 \times V_F.$$

We have $V_F = 0.7V$.

$$\Rightarrow 9V = I_1 \times 175 + 3 \times 0.7 \quad \Rightarrow 6.9 = I_1 \times 175$$

$$\Rightarrow I_1 = \frac{6.9}{175}$$

$$\Rightarrow V_1 = I_1 \times 100 = \frac{6.9}{175} \times 100 = \frac{6.9}{35} \times 20 \approx 3.9429\ V.$$

Problem 1.(b)

Using KVL, $9 = I_1 * 175 + 3 * V_D$

Then, we can change the parameters from Professor Terry's code.

```
format long;
vth=25.85e-3;
R=175;
VDD=9;
I0=1e-14;
verr=@(vd) (VDD-R*I0*(exp(vd/vth)-1)-3*vd);
vd0=0.6;
vd= fzero(verr,vd0)
id=I0*(exp(vd/vth)-1)
vr=R*id
verror=verr(vd)
```

Then, the result is

vd = 0.74916706915895

id = 0.03858570738585

v1 = 3.85857073858500

verror = 1.421085471520200e-014

Problem 2. U&M 2.57

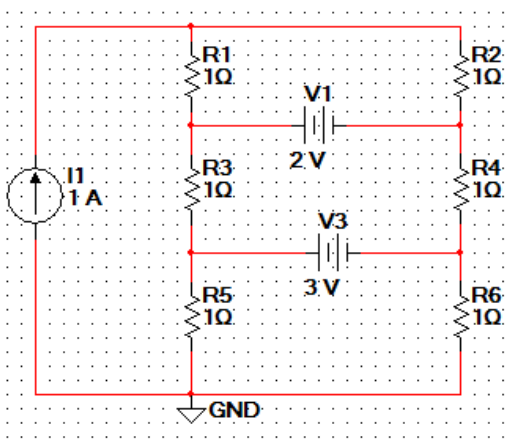

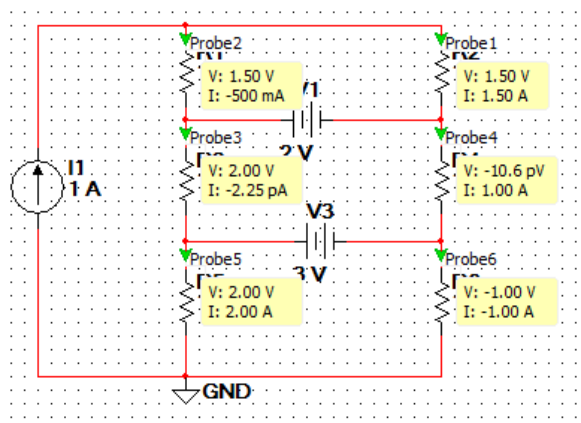

3. U&M 3.1.

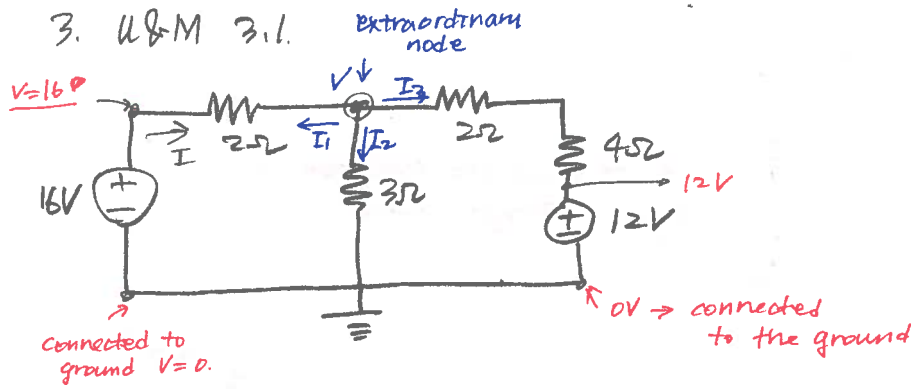

(1) at the extraordinary node

$$I_1 + I_2 + I_3 = 0$$

$$I_2 = \frac{V}{3}, \quad I_1 = \frac{V-16}{2},$$

$$I_3 = \frac{V-12}{2+4}$$ (we have 2Ω and 4Ω resisters in series) → (2+4)Ω

$$\Rightarrow \frac{V-16}{2} + \frac{V}{3} + \frac{V-12}{6} = 0.$$

$$\Rightarrow 6\times\left(\frac{V-16}{2} + \frac{V}{3} + \frac{V-12}{6}\right) = 0$$

$$\Rightarrow (3V-48) + 2V + (V-12) = 6V - 60 = 0.$$

$$\Rightarrow V = 10.$$

$I = -I_1$ (same one line and opposite direction)

$$= -\frac{V-16}{2} = -\frac{10-16}{2} = -\frac{-6}{2} = 3A.$$

$$\Rightarrow \boxed{I = 3A}$$

4. U&M 3.7

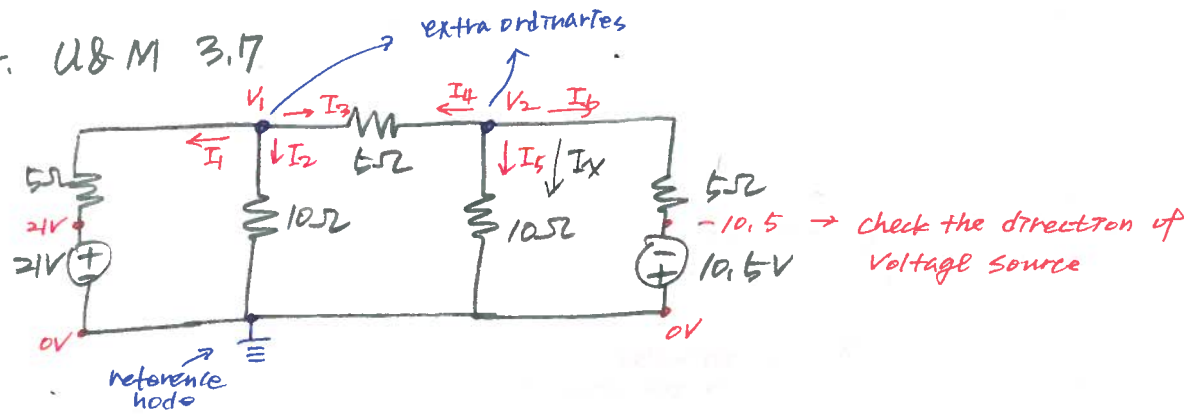

→ check the direction of voltage source

(i) $I_1 + I_2 + I_3 = 0.$

$I_4 + I_5 + I_6 = 0.$

(ii) $I_1 = \dfrac{V_1 - 21}{5}$ $\qquad I_4 = \dfrac{V_2 - V_1}{5} = -I_3$

$I_2 = \dfrac{V_1}{10}$ $\qquad I_5 = \dfrac{V_2}{10}$

$I_3 = \dfrac{V_1 - V_2}{5}$ $\qquad I_6 = \dfrac{V_2 - (-10.5)}{5}$

(iii) $\dfrac{V_1 - 21}{5} + \dfrac{V_1}{10} + \dfrac{V_1 - V_2}{5} = 0.$

$\times 10 \rightarrow (2V_1 - 42) + V_1 + (2V_1 - 2V_2) = 0.$

$\Rightarrow 5V_1 - 2V_2 - 42 = 0$ — ①

iv) $\dfrac{V_2 - V_1}{5} + \dfrac{V_2}{10} + \dfrac{V_2 + 10.5}{5} = 0$

$\times 10 \rightarrow (2V_2 - 2V_1) + V_2 + (2V_2 + 21) = 0$

$\Rightarrow -2V_1 + 5V_2 + 21 = 0$ — ②

$2 \times ① = 10V_1 - 4V_2 - 84 = 0$

$+ \; 5 \times ② = -10V_1 + 25V_2 + 105 = 0$

$21V_2 + 21 = 0.$

$\Rightarrow \boxed{V_2 = -1}$

$\Rightarrow 5V_1 - 2V_2 - 42 = 0 \Rightarrow 5V_1 - 2 \cdot (-1) - 42 = 0$

$\Rightarrow 5V_1 + 2 - 42 = 5V_1 - 40 = 0 \Rightarrow \boxed{V_1 = 8}$

v)

$I_x = I_5 = \dfrac{V_2}{10} = \dfrac{-1}{10} = \boxed{-0.1A}$

5. U&M 3.9

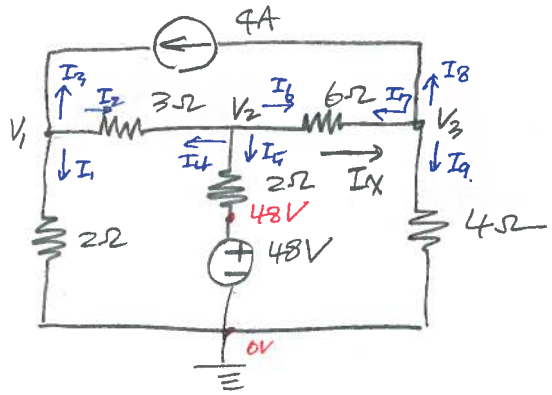

i) $I_1 + I_2 + I_3 = 0$

$I_4 + I_5 + I_6 = 0$

$I_7 + I_8 + I_9 = 0$

ii) $I_1 = \frac{V_1}{2}$, $I_2 = \frac{V_1 - V_2}{3}$, $I_3 = -4$

$I_4 = \frac{V_2 - V_1}{3}$, $I_5 = \frac{V_2 - 48}{2}$, $I_6 = \frac{V_2 - V_3}{6}$

$I_7 = \frac{V_3 - V_2}{6}$, $I_8 = 4$ $\quad I_9 = \frac{V_3}{4}$

iii)
$$\begin{cases} \frac{V_1}{2} + \frac{V_1 - V_2}{3} - 4 = 0 \\ \frac{V_2 - V_1}{3} + \frac{V_2 - 48}{2} + \frac{V_2 - V_3}{6} = 0 \\ \frac{V_3 - V_2}{6} + 4 + \frac{V_3}{4} = 0 \end{cases} \Rightarrow \begin{cases} 3V_1 + (2V_1 - 2V_2) - 24 = 0 & (\times 6) \\ (2V_2 - 2V_1) + (3V_2 - 144) + (V_2 - V_3) = 0 & (\times 6) \\ (2V_3 - 2V_2) + 48 + 3V_3 = 0 & (\times 6) \end{cases}$$

$$\Rightarrow \begin{cases} 5V_1 - 2V_2 = 24 \\ -2V_1 + 6V_2 - V_3 = 144 \\ -2V_2 + 5V_3 = -48 \end{cases} \Rightarrow \begin{bmatrix} 5 & -2 & 0 \\ -2 & 6 & -1 \\ 0 & -2 & 5 \end{bmatrix} \begin{bmatrix} V_1 \\ V_2 \\ V_3 \end{bmatrix} = \begin{bmatrix} 24 \\ 144 \\ -48 \end{bmatrix}$$

$$\Rightarrow \begin{bmatrix} V_1 \\ V_2 \\ V_3 \end{bmatrix} = \begin{bmatrix} 5 & -2 & 0 \\ -2 & 6 & -1 \\ 0 & -2 & 5 \end{bmatrix}^{-1} \begin{bmatrix} 24 \\ 144 \\ -48 \end{bmatrix} = \begin{bmatrix} 16.8 \\ 30 \\ 2.4 \end{bmatrix}$$

$$\Rightarrow I_x = \frac{V_2 - V_3}{6} = \frac{30 - 2.4}{6} = 4.6A.$$

6. U&M 3.16

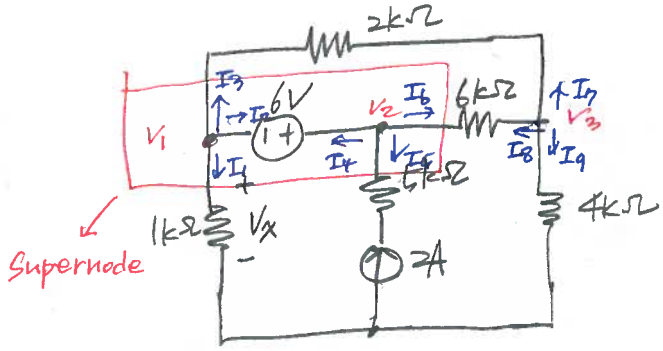

<supernode>

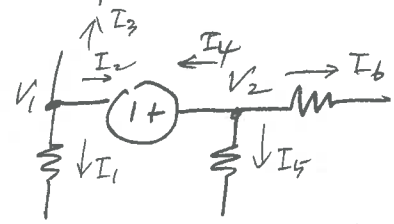

$\Rightarrow$

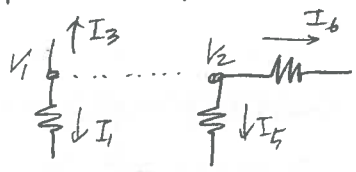

$$\Rightarrow \boxed{\begin{array}{l} I_1 + I_3 + I_5 + I_6 = 0 \\ V_2 - V_1 = 6 \end{array}}$$

i) $I_1 + I_2 + I_5 + I_6 = 0$

$I_7 + I_8 + I_9 = 0$

$V_2 - V_1 = 6$

ii) $I_1 = \dfrac{V_1}{10^3}$, $I_3 = \dfrac{V_1 - V_3}{2\times10^3}$, $I_5 = -2$, $I_6 = \dfrac{V_2 - V_3}{6\times10^3}$

$I_8 = \dfrac{V_3 - V_2}{6\times10^3}$, $I_9 = \dfrac{V_3}{4\times10^3}$, $I_7 = \dfrac{V_3 - V_1}{2\times10^3}$

iii)
$$\begin{cases} \dfrac{V_1}{10^3} + \dfrac{V_1 - V_3}{2\times10^3} - 2 + \dfrac{V_2 - V_3}{6\times10^3} = 0 \\ \dfrac{V_3 - V_2}{6\times10^3} + \dfrac{V_3}{4\times10^3} + \dfrac{V_3 - V_1}{2\times10^3} = 0 \\ V_2 - V_1 = 6 \end{cases} \Rightarrow \begin{cases} 6V_1 + (3V_1 - 3V_3) - 12\times10^3 + (V_2 - V_3) = 0 \\ (2V_3 - 2V_2) + 3V_3 + (6V_3 - 6V_1) = 0 \\ -V_1 + V_2 = 6 \end{cases}$$

$$\Rightarrow \begin{bmatrix} 9V_1 + V_2 - 4V_3 = 12\times10^3 \\ -6V_1 - 2V_2 + 11V_3 = 0 \\ -V_1 + V_2 = 6 \end{bmatrix} = \begin{bmatrix} 9 & 1 & -4 \\ -6 & -2 & 11 \\ -1 & 1 & 0 \end{bmatrix} \begin{bmatrix} V_1 \\ V_2 \\ V_3 \end{bmatrix} = \begin{bmatrix} 12\times10^3 \\ 0 \\ 6 \end{bmatrix}$$

$$\Rightarrow \begin{bmatrix} V_1 \\ V_2 \\ V_3 \end{bmatrix} = \begin{bmatrix} 9 & 1 & -4 \\ -6 & -2 & 11 \\ -1 & 1 & 0 \end{bmatrix}^{-1} \begin{bmatrix} 12\times10^3 \\ 0 \\ 6 \end{bmatrix} = \begin{bmatrix} 1692.1 \\ 1698.1 \\ 1231.7 \end{bmatrix}$$

$$\underline{V_x = V_1 = 1692.1}$$

6. 48M 3.16. 2A source $\longrightarrow$ 10V source

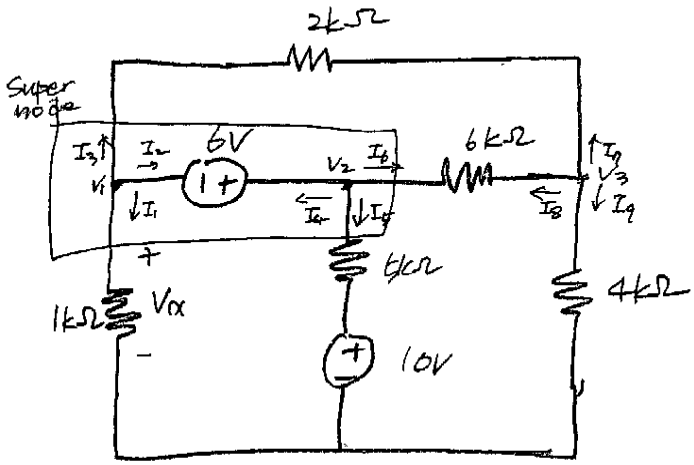

i) $I_1 + I_3 + I_5 + I_6 = 0$

$V_2 - V_1 = 6$

$I_8 + I_9 + I_7 = 0$

ii) $I_1 = \frac{V_1}{10^3}$, $I_3 = \frac{V_1 - V_3}{2\times10^3}$, $I_5 = \frac{V_2 - 10}{5\times10^3}$

$I_6 = \frac{V_2 - V_3}{6\times10^3}$, $I_7 = \frac{V_3 - V_1}{2\times10^3}$, $I_8 = \frac{V_3 - V_2}{6\times10^3}$

$I_9 = \frac{V_3}{4\times10^3}$

iii)
$$\begin{cases} \frac{V_1}{10^3} + \frac{V_1 - V_2}{2\times10^3} + \frac{V_2 - 10}{5\times10^3} + \frac{V_2 - V_3}{6\times10^3} = 0 \\ V_2 - V_1 = 6 \\ \frac{V_3 - V_1}{2\times10^3} + \frac{V_3 - V_2}{6\times10^3} + \frac{V_3}{4\times10^3} = 0 \end{cases}$$

$$\Rightarrow \begin{cases} 30V_1 + (15V_1 - 15V_3) + (6V_2 - 60) + (5V_2 - 5V_3) = 0 \\ V_2 - V_1 = 6 \\ (6V_3 - 6V_1) + (2V_3 - 2V_2) + 3V_3 = 0 \end{cases}$$

$$\Rightarrow \begin{cases} 45V_1 + 11V_2 - 20V_3 = 60 \\ -V_1 + V_2 = 6 \\ -6V_1 - 2V_2 + 11V_3 = 0 \end{cases} \Rightarrow \begin{bmatrix} 45 & 11 & -20 \\ -1 & 1 & 0 \\ -6 & -2 & 11 \end{bmatrix} \begin{bmatrix} V_1 \\ V_2 \\ V_3 \end{bmatrix} = \begin{bmatrix} 60 \\ 6 \\ 0 \end{bmatrix}$$

$$\Rightarrow \begin{bmatrix} V_1 \\ V_2 \\ V_3 \end{bmatrix} = \begin{bmatrix} 45 & 11 & -20 \\ -1 & 1 & 0 \\ -6 & -2 & 11 \end{bmatrix}^{-1} \begin{bmatrix} 60 \\ 6 \\ 0 \end{bmatrix} = \begin{bmatrix} 0.3816 \\ 6.3816 \\ 1.3684 \end{bmatrix}$$

$V_x = V_1 = 0.3816\ V$

7. U&M 3.20.

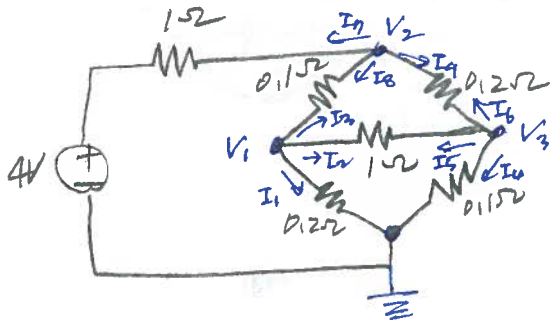

i) $I_1 + I_2 + I_3 = 0$

$I_4 + I_5 + I_6 = 0$

$I_7 + I_8 + I_9 = 0$

ii) $I_1 = \frac{V_1}{0.2}$, $I_2 = \frac{V_2 - V_3}{1}$, $I_3 = \frac{V_1 - V_2}{0.1}$

$I_4 = \frac{V_3}{0.1}$, $I_5 = \frac{V_3 - V_2}{1}$, $I_6 = \frac{V_3 - V_2}{0.2}$

$I_7 = \frac{V_2 - 4}{1}$, $I_8 = \frac{V_2 - V_1}{0.1}$, $I_9 = \frac{V_2 - V_3}{0.2}$

iii) $\frac{V_1}{0.2} + (V_2 - V_3) + \frac{(V_1 - V_2)}{0.1} = 0 \Rightarrow 5V_1 + (V_2 - V_3) + (10V_1 - 10V_2) = 0$

$\rightarrow \underline{15V_1 - 9V_2 - V_3 = 0}$

$\frac{V_3}{0.1} + (V_3 - V_2) + \frac{V_3 - V_2}{0.2} = 0 \longrightarrow 10V_3 + (V_3 - V_1) + (5V_3 - 5V_2) = 0$

$\rightarrow -V_1 - 5V_2 + 16V_3 = 0$

$(V_2 - 4) + \frac{(V_2 - V_1)}{0.1} + \frac{V_2 - V_3}{0.2} = 0 \rightarrow V_2 - 4 + (10V_2 - 10V_1) + (5V_2 - 5V_3) = 0$

$\rightarrow -10V_1 + 16V_2 - 5V_3 = 4$

$$\Rightarrow \boxed{\begin{aligned} 15V_1 - 9V_2 - V_3 &= 0 \\ -V_1 - 5V_2 + 16V_3 &= 0 \\ -10V_1 + 16V_2 - 5V_3 &= 4 \end{aligned}}$$

$$\begin{bmatrix} V_1 \\ V_2 \\ V_3 \end{bmatrix} = \begin{bmatrix} 15 & -9 & -1 \\ -1 & -5 & 16 \\ -10 & 16 & -5 \end{bmatrix}^{-1} \begin{bmatrix} 0 \\ 0 \\ 4 \end{bmatrix}$$

$$= \begin{bmatrix} 0.3114 \\ 0.4995 \\ 0.1755 \end{bmatrix}$$

$$\underline{I_x = \frac{V_1 - V_3}{1} = 0.1358\,A}$$