EECS 215: Introduction to Electronic Circuits WN 2010
Problem Set 4

Issued: 1/29/10

Due: 2/5/10, **9:30 AM**

Note: Problem sets are DUE at the start of lecture on Friday mornings. Do not skip class to work on homework further. Your paper may not be accepted.

U&M refers to a problem from Ulaby and Maharb**iz**.

Problems:

1. Suppose we have the resistor networks shown below. Find the equivalent resistance between terminals (a) & (b). (15pts)
    a. A resistor bridge

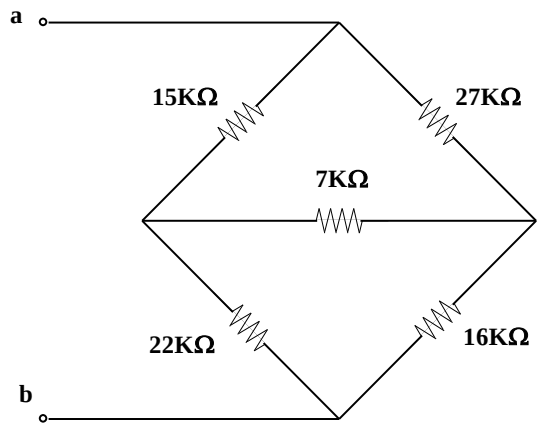

    b. A resistor cube

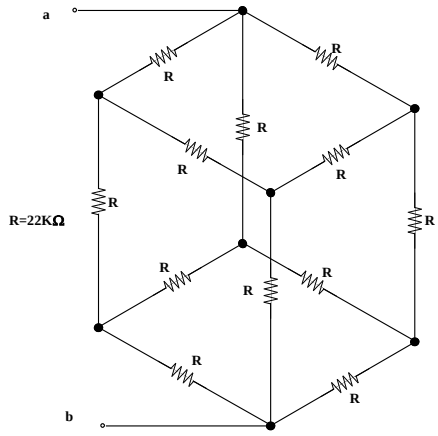
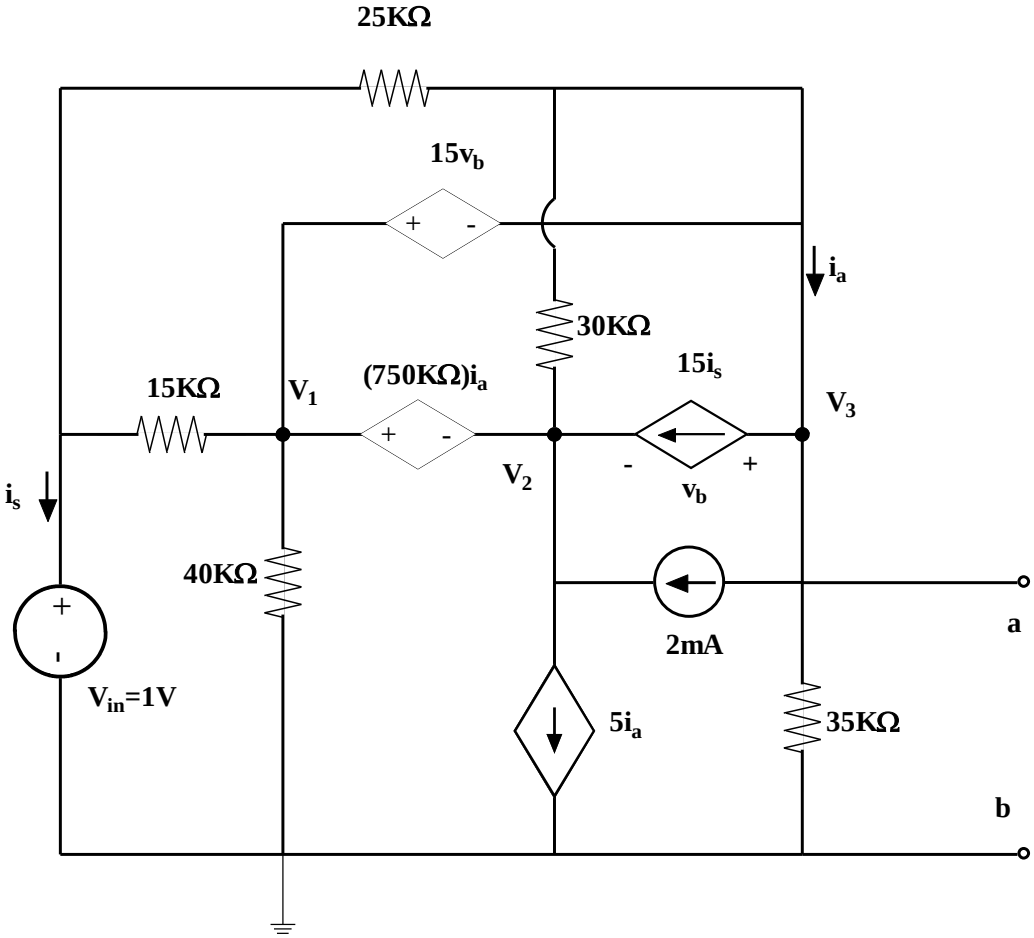
2. U&M 3.53 (15 pts)
3. U&M 3.54 (15 pts)
4. U&M 3.58 (15 pts)
5. U&M 3.68 (15 pts)
6. For the annoying circuit from problem set 3, number 6, we attach a pair of output terminals a, b as shown in the following picture:
    a. Use Node Analysis, to find $V_{TH}=V_{OC}=V_{ab}$ under open circuit conditions. Using Multisim or Pspice, verify your results. (5 pts)
    b. Use Node Analysis, to find $I_N=I_{SC}$ under short circuit conditions. Using Multisim or Pspice, verify your results. (10 pts)
    c. Use Node Analysis and a test current source to find R_{eq}. Remember to do the right thing with sources. Using Multisim or Pspice, verify your results. For both your analytic work and Multisim work, do you get $R_{eq}=V_{TH}/I_N$? (10 pts)