EECS 215: Introduction to Electronic Circuits WN 2010
Problem Set 3

Issued: 1/22/10

Due: 1/29/10, **9:30 AM**

Note: Problem sets are DUE at the start of lecture on Friday mornings. Do not skip class to work on homework further. Your paper may not be accepted.

U&M refers to a problem from Ulaby and Maharbiz.

Problems:

1. U&M 3.25 (10 pts)
2. U&M 3.31 (15 pts)
3. U&M 3.36 (15 pts)
4. U&M 3.48
    a. Do problem as stated in the text (10 pts)
    b. What is the equivalent resistance "seen" by the 8V source? (5 pts)
5. U&M 3.49 (15 pts)
6. For the circuit on the following page
    a. Use Node Analysis, find the unknown node voltages V1, V2, V3 (20 points).
    b. Using Multisim or Pspice, verify your results from (a). Include print out of your schematic and the DC analysis results. (10 pts)

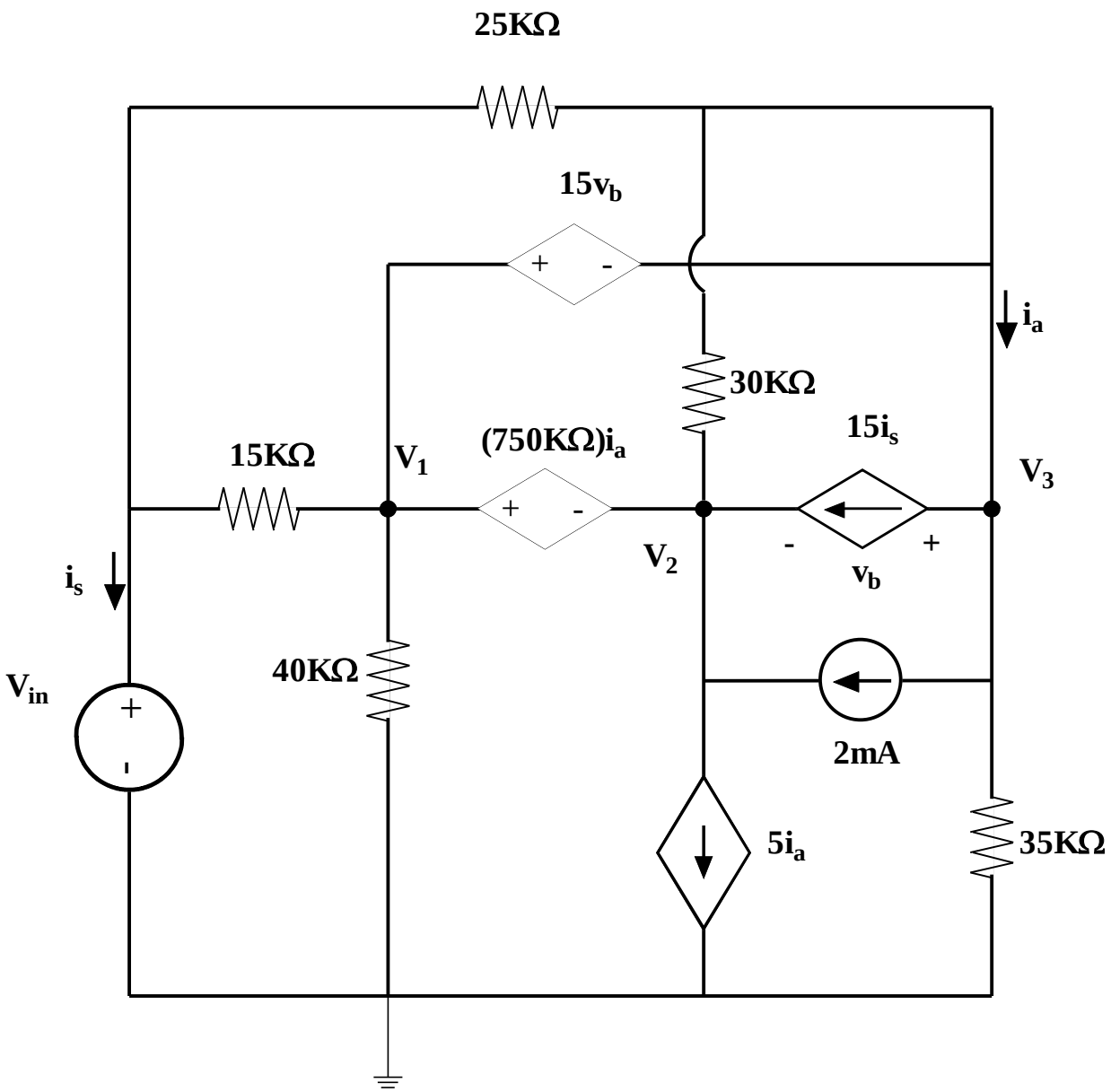
25KΩ
15v_b
+
-
i_a
30KΩ
15i_s
15KΩ
V_1
(750KΩ)i_a
V_3
+
-
V_2
-
+
v_b
i_s
40KΩ
V_in
+
-
2mA
5i_a
35KΩ