P.1. U&M 3.25

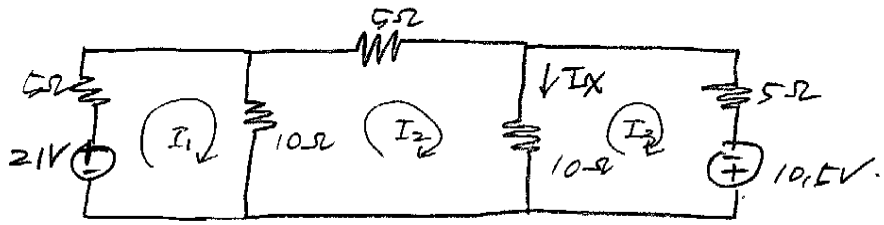

Mesh analysis and KVL.

$$\begin{cases} 21\,V = 5\times I_1 + 10\times(I_1 - I_2) \\ 10\times(I_2 - I_1) + 5\times I_2 + 10\times(I_2 - I_3) \\ 10(I_3 - I_2) + 5\times I_3 - 10.5 = 0 \end{cases} \Rightarrow \begin{cases} 15I_1 - 10I_2 = 21 \\ -10I_1 + 25I_2 - 10I_3 = 0 \\ -10I_2 + 15I_3 = 10.5 \end{cases}$$

$$\Rightarrow \begin{bmatrix} 15 & -10 & 0 \\ -10 & 25 & -10 \\ 0 & -10 & 15 \end{bmatrix} \begin{bmatrix} I_1 \\ I_2 \\ I_3 \end{bmatrix} = \begin{bmatrix} 21 \\ 0 \\ 10.5 \end{bmatrix}$$

$$\Rightarrow \begin{bmatrix} I_1 \\ I_2 \\ I_3 \end{bmatrix} = \begin{bmatrix} 15 & -10 & 0 \\ -10 & 25 & -10 \\ 0 & -10 & 15 \end{bmatrix}^{-1} \begin{bmatrix} 21 \\ 0 \\ 10.5 \end{bmatrix} = \begin{bmatrix} 2.6 \\ 1.8 \\ 1.9 \end{bmatrix}$$

$$\Rightarrow I_x = I_2 - I_3 = 1.8 - 1.9 = \underline{-0.1\,A}$$

P.2 U&M 3.31

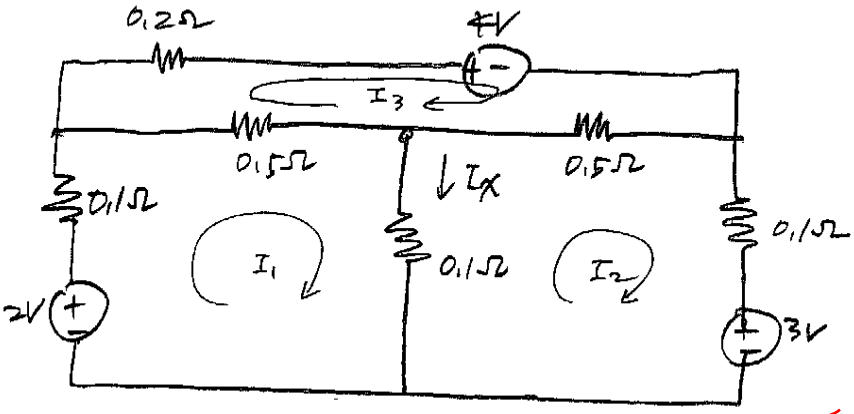

2V

Mesh Analysis and KVL.

Mesh 1: $24 = 0.1 I_1 + 0.5\times(I_1 - I_3) + 0.1\times(I_1 - I_2)$

Mesh 2: $0.1\times(I_2 - I_1) + 0.5\times(I_2 - I_3) + 0.1\times I_2 + 3 = 0$

Be careful about direction of mesh current!

Mesh 3: $0.2\times I_3 + 4 + 0.5\times(I_3 - I_2) + 0.5\times(I_3 - I_1) = 0$

$$\Rightarrow \begin{cases} 0.7I_1 - 0.1I_2 - 0.5I_3 = 24 \\ -0.1I_1 + 0.7I_2 - 0.5I_3 = -3 \\ -0.5I_1 - 0.5I_2 + 1.2I_3 = -4 \end{cases} \Rightarrow \begin{bmatrix} 0.7 & -0.1 & -0.5 \\ -0.1 & 0.7 & -0.5 \\ -0.5 & -0.5 & 1.2 \end{bmatrix} \begin{bmatrix} I_1 \\ I_2 \\ I_3 \end{bmatrix} = \begin{bmatrix} \cancel{24}\ 2V \\ -3 \\ -4 \end{bmatrix}$$

$$\Rightarrow \begin{bmatrix} I_1 \\ I_2 \\ I_3 \end{bmatrix} = \begin{bmatrix} 0.7 & -0.1 & -0.5 \\ -0.1 & 0.7 & -0.5 \\ -0.5 & -0.5 & 1.2 \end{bmatrix}^{-1} \begin{bmatrix} \cancel{24}\ +2 \\ -3 \\ -4 \end{bmatrix} = \begin{bmatrix} \cancel{65.0568} \\ \cancel{31.3068} \\ \cancel{30.8181} \end{bmatrix} = \begin{bmatrix} -8.6932 \\ -14.9432 \\ -13.1818 \end{bmatrix}$$

$$\Rightarrow I_x = I_1 - I_2 = \cancel{33.75\,A}\ +6.25\,A$$

P.3. U&M 3.36.

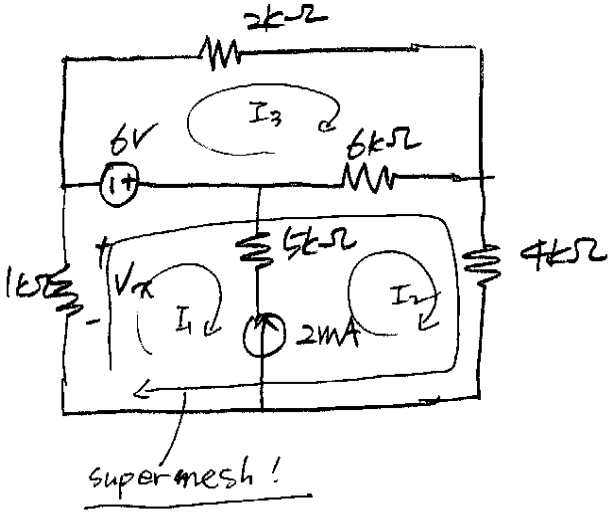

mesh 3: $6 + 2\times10^3 \times I_3 + 6\times10^3 \times (I_3 - I_2) = 0$

supermesh $\begin{cases} 10^3 \times I_1 - 6 + 6\times10^3 \times (I_2 - I_3) + 4\times10^3 \times I_2 = 0 \\ I_2 - I_1 = 2\times10^{-3} \end{cases}$

$$\Rightarrow \begin{cases} -6\times10^3 \times I_2 + 8\times10^3 \times I_3 = -6 \\ 10^3 \times I_1 + 10\times10^3 \times I_2 - 6\times10^3 \times I_3 = 6 \\ -I_1 + I_2 = 2\times10^{-3} \end{cases}$$

$$\Rightarrow \begin{cases} 6\times I_2 - 8\times I_3 = 6\times10^{-3} \\ I_1 + 10 I_2 - 6 I_3 = 6\times10^{-3} \\ -I_1 + I_2 = 2\times10^{-3} \end{cases}$$

$$\Rightarrow \begin{bmatrix} 0 & 6 & -8 \\ 1 & 10 & -6 \\ -1 & 1 & 0 \end{bmatrix} \begin{bmatrix} I_1 \\ I_2 \\ I_3 \end{bmatrix} = \begin{bmatrix} 6\times10^{-3} \\ 6\times10^{-3} \\ 2\times10^{-3} \end{bmatrix}$$

$$\Rightarrow \begin{bmatrix} I_1 \\ I_2 \\ I_3 \end{bmatrix} = \begin{bmatrix} 0 & 6 & -8 \\ 1 & 10 & -6 \\ -1 & 1 & 0 \end{bmatrix}^{-1} \begin{bmatrix} 6\times10^{-3} \\ 6\times10^{-3} \\ 2\times10^{-3} \end{bmatrix} = \begin{bmatrix} -0.0014615 \\ 0.0005385 \\ -0.0003462 \end{bmatrix}$$

$V_x = \underline{1\times10^3 \times (-I_1) = 1.4615}$

P. 4 ~~[illegible]~~ W&M 3.48

(1)

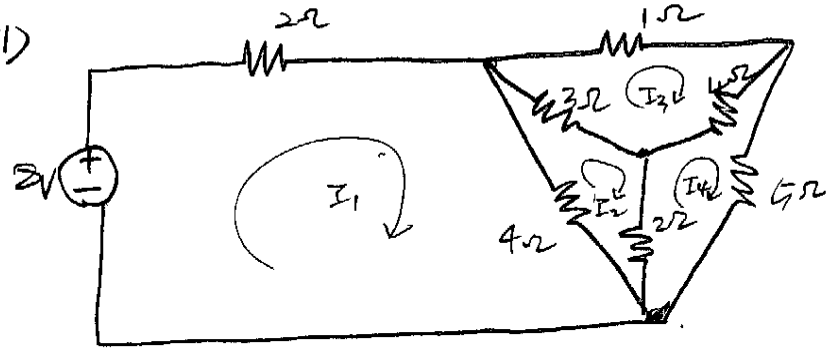

Mesh analysis and KVL.

Mesh 1: $-8V + 2\times I_1 + 4\times(I_1 - I_2) = 0$

Mesh 2: $4\times(I_2 - I_1) + 3\times(I_2 - \cancel{I_3}) + 2\times(I_2 - I_4) = 0$

Mesh 3: $3\times(I_3 - \cancel{I_2}) + 1\times I_3 + 4\times(I_3 - I_4) = 0$

Mesh 4: $2\times(I_4 - I_2) + 4\times(I_4 - \cancel{I_3}) + 5\times I_4 = 0$

$$\Rightarrow \begin{cases} 6I_1 - 4I_2 = 8 \\ -4I_1 + 9I_2 - 3I_3 - 2I_4 = 0 \\ -3I_2 + 8I_3 - 4I_4 = 0 \\ -2I_2 - 4I_3 + 11I_4 = 0 \end{cases}$$

$$\Rightarrow \begin{bmatrix} 6 & -4 & 0 & 0 \\ -4 & 9 & -3 & -2 \\ 0 & -3 & 8 & -4 \\ 0 & -2 & -4 & 11 \end{bmatrix} \begin{bmatrix} I_1 \\ I_2 \\ I_3 \\ I_4 \end{bmatrix} = \begin{bmatrix} 8 \\ 0 \\ 0 \\ 0 \end{bmatrix}$$

$$\Rightarrow \begin{bmatrix} I_1 \\ I_2 \\ I_3 \\ I_4 \end{bmatrix} = \begin{bmatrix} 6 & -4 & 0 & 0 \\ -4 & 9 & -3 & -2 \\ 0 & -3 & 8 & -4 \\ 0 & -2 & -4 & 11 \end{bmatrix}^{-1} \begin{bmatrix} 8 \\ 0 \\ 0 \\ 0 \end{bmatrix} = \begin{bmatrix} 2.2572 \\ 1.3863 \\ 0.7894 \\ 0.5391 \end{bmatrix}$$

$P_{source} = V_{source} \cdot I_{source} = 8 \times I_1 = \underline{18.0602\ W}$

(2) $R_{eq.\,source} = \dfrac{V_{source}}{I_{source}} = \dfrac{8}{2.2572} = \underline{3.5442\ \Omega}$

5. UBM 3.49

Source superposition method

①

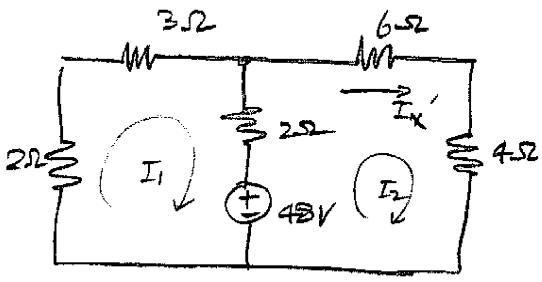

$$\begin{cases} 48 + 2\times I_1 + 3\times I_1 + 2\times(I_1 - I_2) = 0 \\ -48 + 2\times(I_2 - I_1) + 6\times I_2 + 4\times I_2 = 0 \end{cases}$$

$$\Rightarrow \begin{cases} 7I_1 - 2I_2 = -48 \\ -2I_1 + 12I_2 = 48 \end{cases}$$

$$\Rightarrow \begin{bmatrix} 7 & -2 \\ -2 & 12 \end{bmatrix} \begin{bmatrix} I_1 \\ I_2 \end{bmatrix} = \begin{bmatrix} -48 \\ 48 \end{bmatrix}$$

$$\Rightarrow \begin{bmatrix} I_1 \\ I_2 \end{bmatrix} = \begin{bmatrix} 7 & -2 \\ -2 & 12 \end{bmatrix}^{-1} \begin{bmatrix} -48 \\ 48 \end{bmatrix}$$

$$\Rightarrow I_1 = -6, \quad I_2 = 3$$

$$\Rightarrow \boxed{I_x' = I_2 = 3A}$$

②

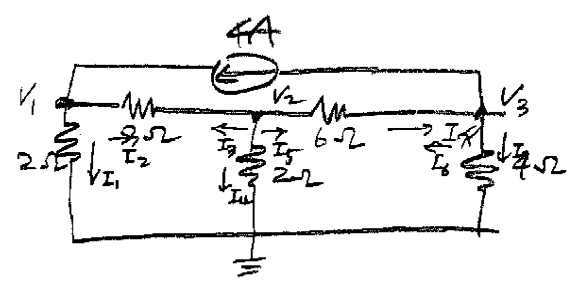

Node Analysis

$$\begin{cases} I_1 + I_2 - 4 = 0 \\ I_3 + I_4 + I_5 = 0 \\ I_6 + I_7 + 4 = 0 \end{cases} \Rightarrow$$

$$\Rightarrow \begin{cases} \frac{V_1}{2} + \frac{V_1 - V_2}{3} - 4 = 0 \\ \frac{V_2 - V_1}{3} + \frac{V_2}{2} + \frac{V_2 - V_3}{6} = 0 \\ \frac{V_3 - V_2}{6} + \frac{V_3}{4} + 4 = 0 \end{cases}$$

$$\Rightarrow \begin{cases} 3V_1 + 2V_1 - 2V_2 - 24 = 0 \\ 2V_2 - 2V_1 + 3V_2 + V_2 - V_3 = 0 \\ 2V_3 - 2V_2 + 3V_3 + 48 = 0 \end{cases}$$

$$\Rightarrow \begin{cases} 5V_1 - 2V_2 = 24 \\ -2V_1 + 6V_2 - V_3 = 0 \\ -2V_2 + 5V_3 = -48 \end{cases}$$

$$\Rightarrow \begin{bmatrix} 5 & -2 & 0 \\ -2 & 6 & -1 \\ 0 & -2 & 5 \end{bmatrix} \begin{bmatrix} V_1 \\ V_2 \\ V_3 \end{bmatrix} = \begin{bmatrix} 24 \\ 0 \\ -48 \end{bmatrix}$$

$$\Rightarrow \begin{bmatrix} V_1 \\ V_2 \\ V_3 \end{bmatrix} = \begin{bmatrix} 5 & -2 & 0 \\ -2 & 6 & -1 \\ 0 & -2 & 5 \end{bmatrix}^{-1} \begin{bmatrix} 24 \\ 0 \\ -48 \end{bmatrix}$$

$$= \begin{bmatrix} 4.8 \\ 0 \\ -9.6 \end{bmatrix}$$

$$\boxed{I_x'' = \frac{V_2 - V_3}{6} = \frac{9.6}{6} = 1.6}$$

$$\boxed{\begin{aligned} I_x &= I_x' + I_x'' \\ &= 3 + 1.6 = 4.6A \end{aligned}}$$

Problem Set 3 # 6 (a) Elegant Solution

$V_4 = V_{in}$

Identify Supernode(s)

① - ② - ③ Supernode

SNKCL

$$\left(\frac{V_3 - V_{in}}{25K\Omega}\right) + \left(\frac{V_1 - V_{in}}{15K\Omega}\right) + \left(\frac{V_1}{40K\Omega}\right) + 5i_a + \left(\frac{V_3}{35K\Omega}\right) = 0$$

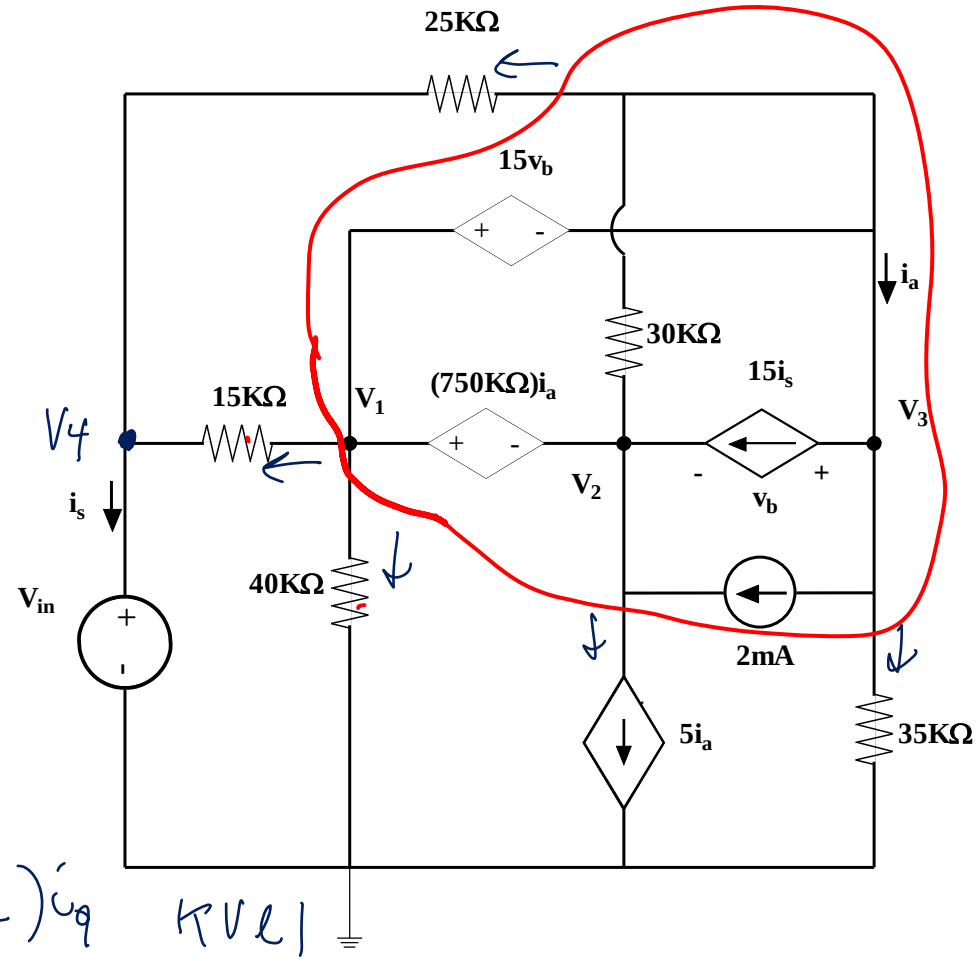

KVL $V_1 - V_2 = (750k\Omega)i_a$ KVL1

$V_1 - V_3 = 15v_b$ KVL2

Dep Source Variables

$v_b = V_3 - V_2$

↳ KVL 2':

$V_1 - V_3 = 15(V_3 - V_2)$

i_a?

$i_a = 15 i_s + 2mA + \frac{V_3}{35K\Omega}$

④ KCL

$\frac{V_3 - V_{in}}{25K\Omega} + \frac{V_1 - V_{in}}{15K\Omega} = i_s$

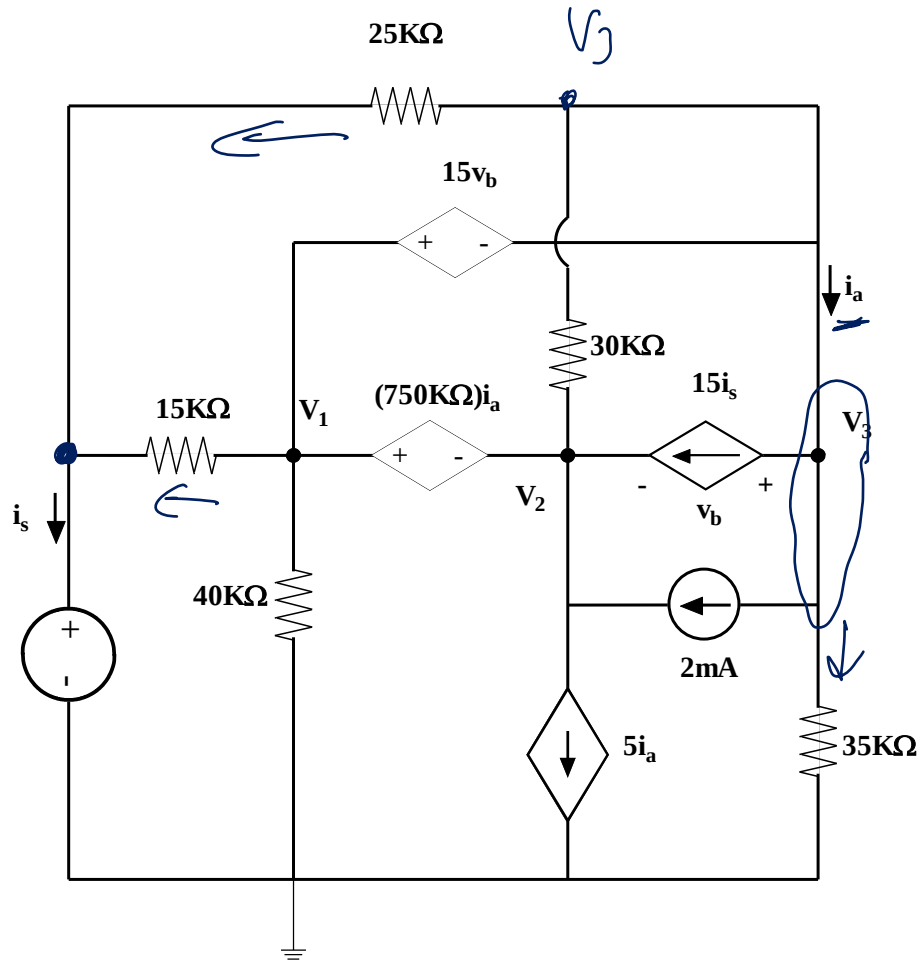

In[1]:= `snkcl = (v3 - vin) / (25 * 10^3) + (v1 - vin) / (15 * 10^3) + v1 / (40 * 10^3) + 5 * ia + v3 / (35 * 10^3)`

Out[1]= $5\,ia + \frac{v1}{40\,000} + \frac{v3}{35\,000} + \frac{v1 - vin}{15\,000} + \frac{v3 - vin}{25\,000}$

In[2]:= `kvl1 = v1 - v2 - 750 * 10^3 * ia`

Out[2]= $-750\,000\,ia + v1 - v2$

In[3]:= `kvl2 = v1 - v3 - 15 * vb`

Out[3]= $v1 - v3 - 15\,vb$

In[4]:= `vb = v3 - v2`

Out[4]= $-v2 + v3$

In[5]:= `kvl2`

Out[5]= $v1 - v3 - 15\,(-v2 + v3)$

In[6]:= `ia = 15 * is + 2 * 10^-3 + v3 / (35 * 10^3)`

Out[6]= $\frac{1}{500} + 15\,is + \frac{v3}{35\,000}$

In[7]:= `is = (v3 - vin) / (25 * 10^3) + (v1 - vin) / (15 * 10^3)`

Out[7]= $\frac{v1 - vin}{15\,000} + \frac{v3 - vin}{25\,000}$

In[8]:= `ia`

Out[8]= $\frac{1}{500} + \frac{v3}{35\,000} + 15\left(\frac{v1 - vin}{15\,000} + \frac{v3 - vin}{25\,000}\right)$

In[9]:= `Solve[{snkcl == 0, kvl1 == 0, kvl2 == 0}, {v1, v2, v3}]`

Out[9]= $\left\{\left\{v1 \to -\frac{32\,(-45\,375 + 11\,494\,vin)}{10\,117},\ v2 \to \frac{16\,(-161\,625 + 42\,112\,vin)}{10\,117},\ v3 \to \frac{7\,(-333\,375 + 86\,956\,vin)}{10\,117}\right\}\right\}$

In[10]:= $\mathbf{N}\left[-\frac{32\,(-45\,375 + 11\,494)}{10\,117},\ 9\right]$

In[11]:= $\mathbf{N}\left[\frac{16\,(-161\,625 + 42\,112)}{10\,117},\ 9\right]$

Out[11]= -189.009390

In[12]:= $\mathbf{N}\left[\frac{7\,(-333\,375 + 86\,956)}{10\,117},\ 9\right]$

Out[12]= -170.498468

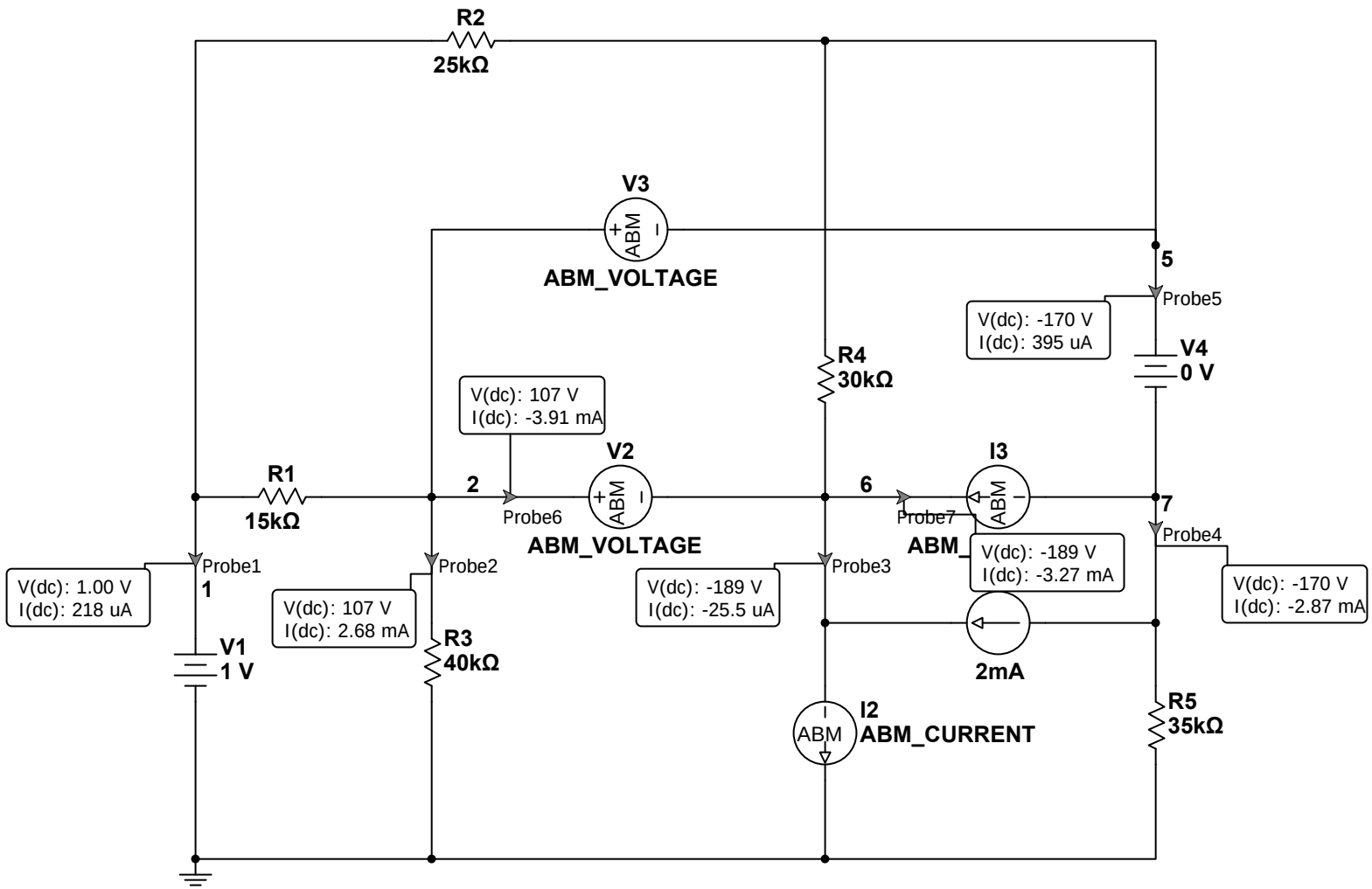
R2
25kΩ
V3
ABM
ABM_VOLTAGE
5
Probe5
V(dc): -170 V
I(dc): 395 uA
V4
0 V
R4
30kΩ
V(dc): 107 V
I(dc): -3.91 mA
V2
ABM
ABM_VOLTAGE
I3
ABM
ABM_
R1
15kΩ
2
Probe6
6
Probe7
7
Probe4
V(dc): -189 V
I(dc): -3.27 mA
V(dc): 1.00 V
I(dc): 218 uA
Probe1
1
Probe2
V(dc): 107 V
I(dc): 2.68 mA
V(dc): -189 V
I(dc): -25.5 uA
Probe3
V(dc): -170 V
I(dc): -2.87 mA
V1
1 V
R3
40kΩ
2mA
I2
ABM
ABM_CURRENT
R5
35kΩ

Problem set 3 num 6

Printing Time:January 26, 2010 12:15:37

DC Operating Point

	DC Operating Point	
1	V(Probe6)	107.16602
2	V(Probe5)	-170.49951
3	V(Probe4)	-170.49951
4	V(Probe3)	-189.01054
5	V(Probe2)	107.16602
6	V(Probe1)	1.00000
7	I(Probe1)	217.75446 u
8	I(Probe2)	2.67915 m
9	I(Probe3)	-25.48977 u
10	I(Probe4)	-2.87141 m
11	I(Probe5)	394.90191 u
12	I(Probe6)	-3.90884 m
13	V(Probe7)	-189.01054
14	I(Probe7)	-3.26632 m