# EECS 215 Winter Semester 2010 Midterm Exam II

Name (last, first): _____

Lecture Section Terry Guo

Rules:

1. Friday, March 26, 2010, 9:00 to 10:30 AM nominal exam time.
   **DO NOT DISCUSS THIS EXAM WITH ANYONE PRIOR UNTIL RECEIVING CTOOLS Announcement!!**
2. Closed Book, etc.
3. 2 Pages (8.5"x11", double sided) of notes allowed
4. Calculators Needed and Allowed. No devices with full alphanumeric keyboards are permitted.
5. **Exam is given under the College of Engineering Honor Code principles and practices.**
6. **No communications of any kind are allowed. Use of cell phones, cameras, personal data assistants, computers, or any other electronic devices, besides approved calculators, will be treated as an Honor Code violation.**
7. Work to be done in Exam booklet. Turn in all pages of the exam.
   Do not unstaple the pages. You may remove the last 2 pages (19-20, FOC&SOC note pages)
8. DO NOT WRITE ON THE BACK OF PAGES.
   Work on backs of pages will NOT be graded.
9. Show your work and *briefly* explain major steps to maximize partial credit.
   (for example: i3=i1+i2, node A, KCL).
   **NO CREDIT WILL BE GIVEN IF NO WORK IS SHOWN.**

*10. WRITE YOUR FINAL ANSWERS IN THE AREAS PROVIDED*

This Exam Contains

**3 problems over 18 pages** (including ample workspace).

**Sign the College of Engineering Honor Code Below.**
**(NO credit will be given for the exam without a signed pledge):**

***I have neither given nor received aid on this examination.***

**Signed:_____**

Do not write below this line

**********

Problem 1 [a b ] Problem 2 [ ]

Problem 3 [a b ]

# Problem 1: First Order Circuits (30 points)

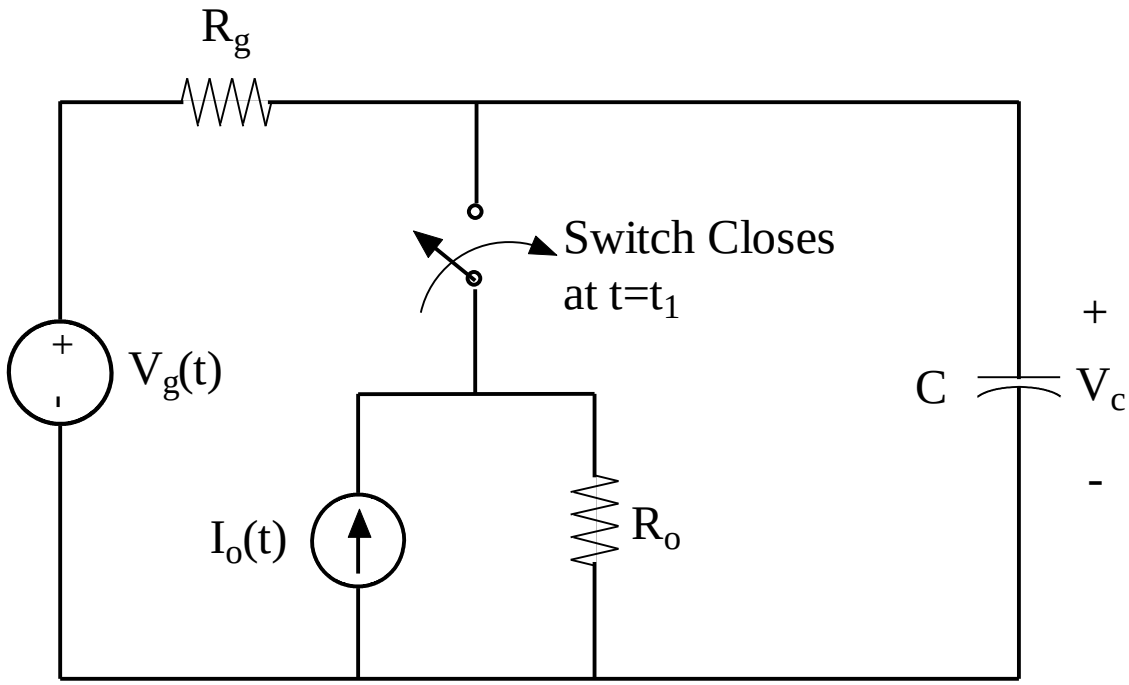


For the circuit above, the switch has been open for a long time (infinitely long) prior to t=0:

a) If we have the following values:
$V_g(t) = 10u(t)V \quad R_g = 500K\Omega \quad I_o(t) = 10\mu A \quad R_o = 2M\Omega \quad C = 1nF$
The switch closes when the capacitor is charged to +5V and this time is defined to be $t_1$ {$V_c(t_1)$=+5V}. Find $V_c(t)$ for $0 \le t < t_1$ and find the value of $t_1$. (15 points)

| | |
|---|---|
| $V_c(t)$ = | _____ $(0 \le t < t_1)$ |
| $t_1$ = | _____ |

Workspace for 1(a)

$$V_g(t) = 10u(t)V \quad R_g = 500K\Omega \quad I_o(t) = 10\mu A \quad R_o = 2M\Omega \quad C = 1nF$$

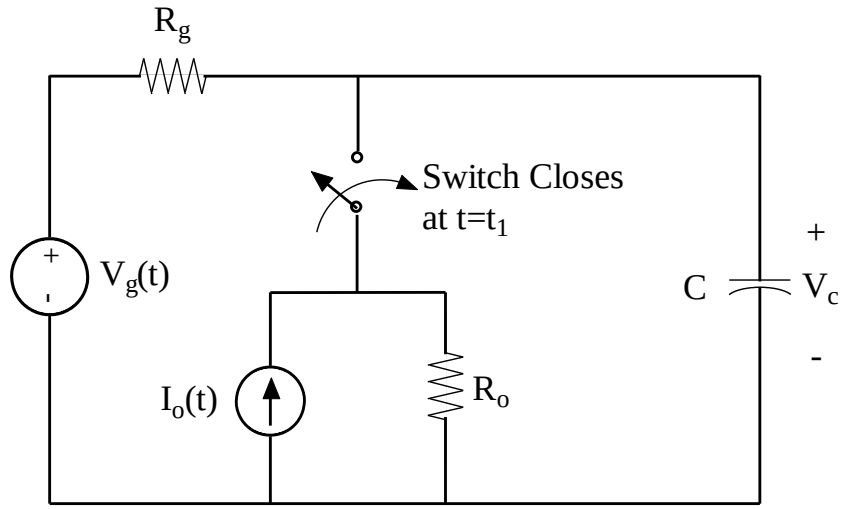

Additional Workspace for 1(a)

a) *<u>This problem can be done even if you did not complete part (a) {just leave $t_1$ as a symbolic constant}.</u>*

Using the same component values as in part (b), find $V_c(t)$ for $t \geq t_1$ . (15 points)

$V_g(t) = 10u(t)V \quad R_g = 500K\Omega \quad I_o(t) = 10\mu A \quad R_o = 2M\Omega \quad C = 1nF$

| |
|---|
| $V_c(t)$ = _____ $(t \geq t_1)$ |

Workspace for 1(b)

$$V_g(t) = 10u(t)V \quad R_g = 500K\Omega \quad I_o(t) = 10\mu A \quad R_o = 2M\Omega \quad C = 1nF$$

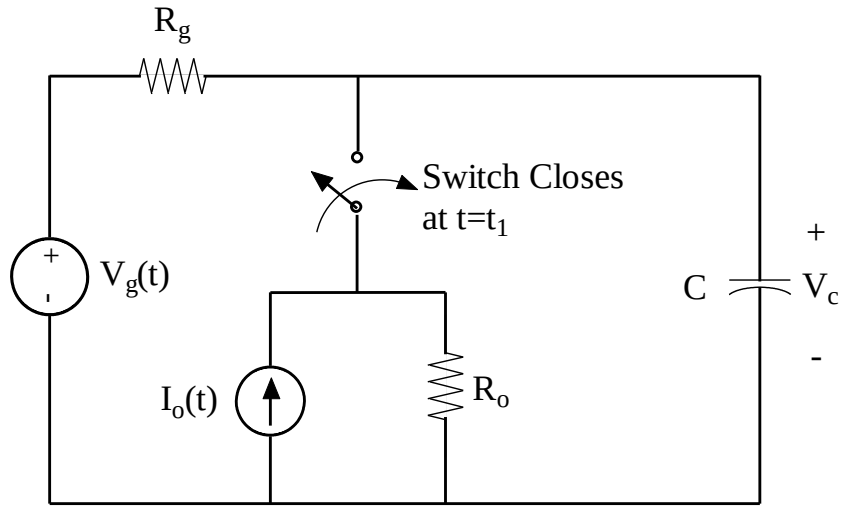

Additional Workspace for 1(b)

$$V_g(t) = 10u(t)V \quad R_g = 500K\Omega \quad I_o(t) = 10\mu A \quad R_o = 2M\Omega \quad C = 1nF$$

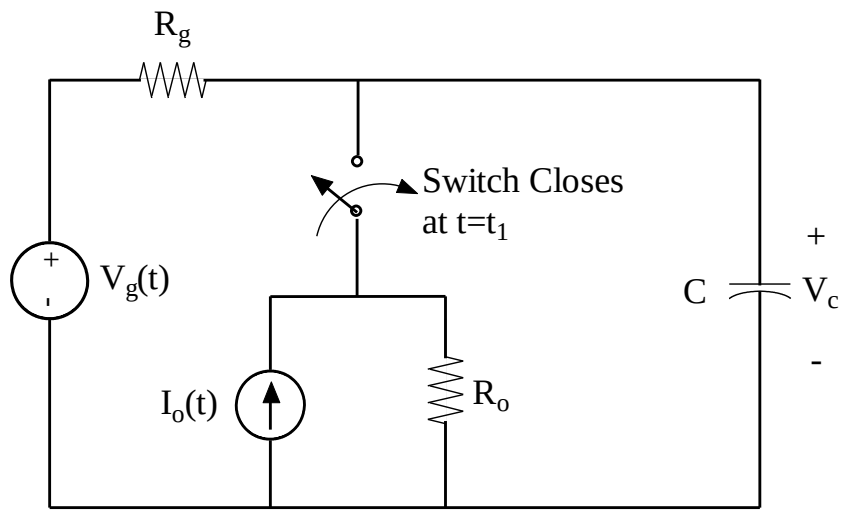

## Problem 2: Series RLC (35 points)

For the circuit below, find $v_c(t)$ and $i_L(t)$ for $t \geq 0$. Note that the sign conventions for $V_c$ and $i_L$ are defined on the circuit diagram. In the body of your work, be sure to clearly indicate major intermediate steps (initial conditions, forced solution, natural solution, matching to initial conditions).

Use the values:

$$I_o(t) = 2mA \qquad V_g(t) = 12V$$
$$R_o = 1K\Omega \qquad R_1 = 4K\Omega \qquad R_g = 6K\Omega$$
$$L = 1mH \quad C = 16nF$$

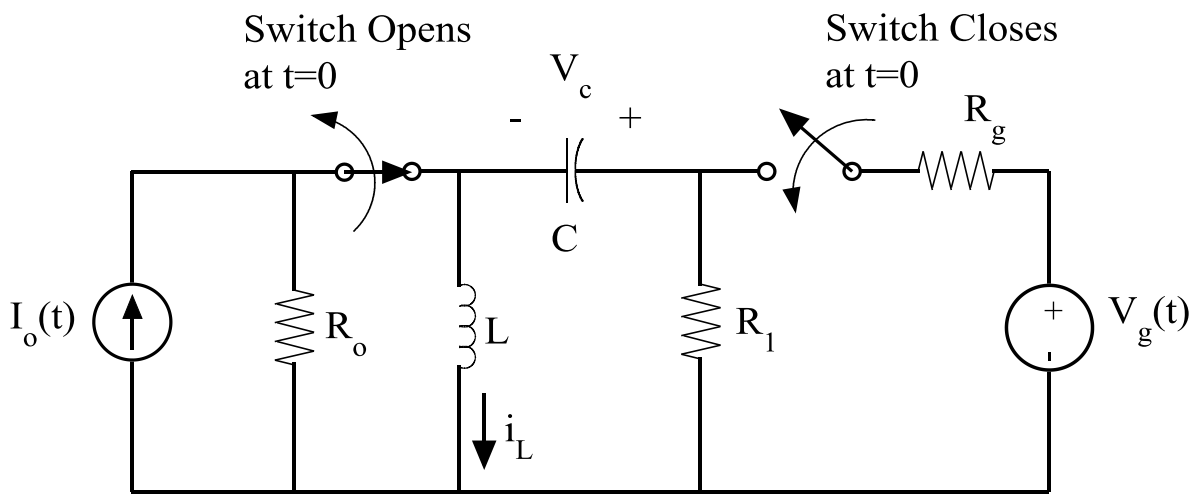


$V_c(t)$ = _____

_____

$i_L(t)$ = _____

_____

Workspace for problem 2

$I_o(t) = 2mA \qquad V_g(t) = 12V$

$R_o = 1K\Omega \quad R_1 = 4K\Omega \quad R_g = 6K\Omega$

$L = 1mH \quad C = 16nF$

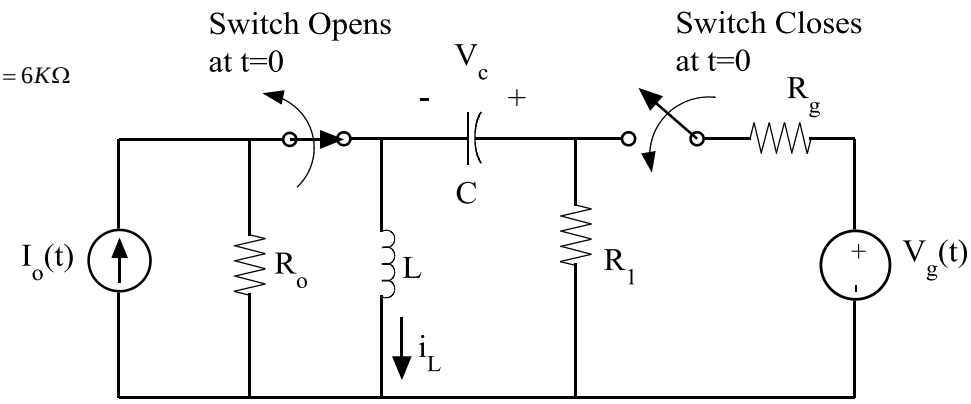

Additional Workspace for problem 2

$I_o(t) = 2mA \qquad V_g(t) = 12V$

$R_o = 1K\Omega \quad R_1 = 4K\Omega \quad R_g = 6K\Omega$

$L = 1mH \quad C = 16nF$

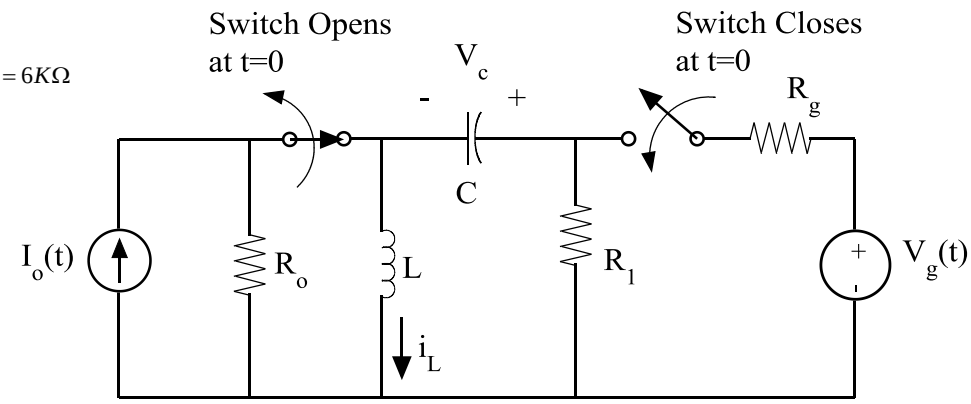

Additional Workspace for problem 2

$I_o(t) = 2mA \qquad V_g(t) = 12V$

$R_o = 1K\Omega \quad R_1 = 4K\Omega \quad R_g = 6K\Omega$

$L = 1mH \quad C = 16nF$

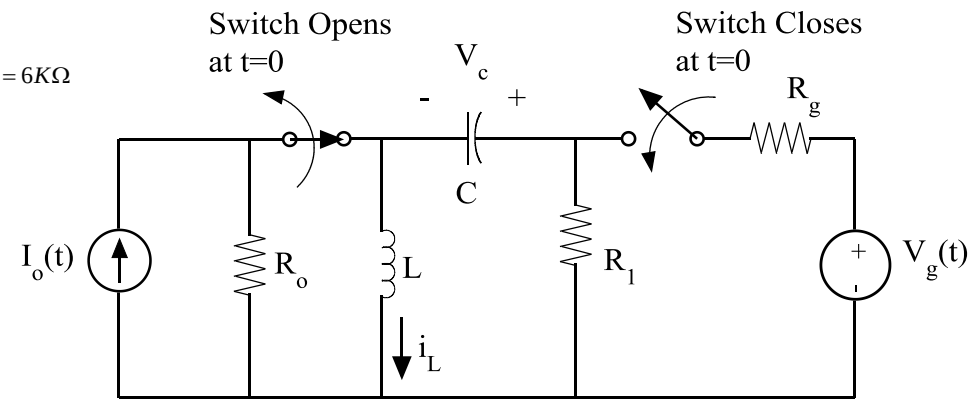

**Problem 3: General RLC (35 points)**

For the circuit below

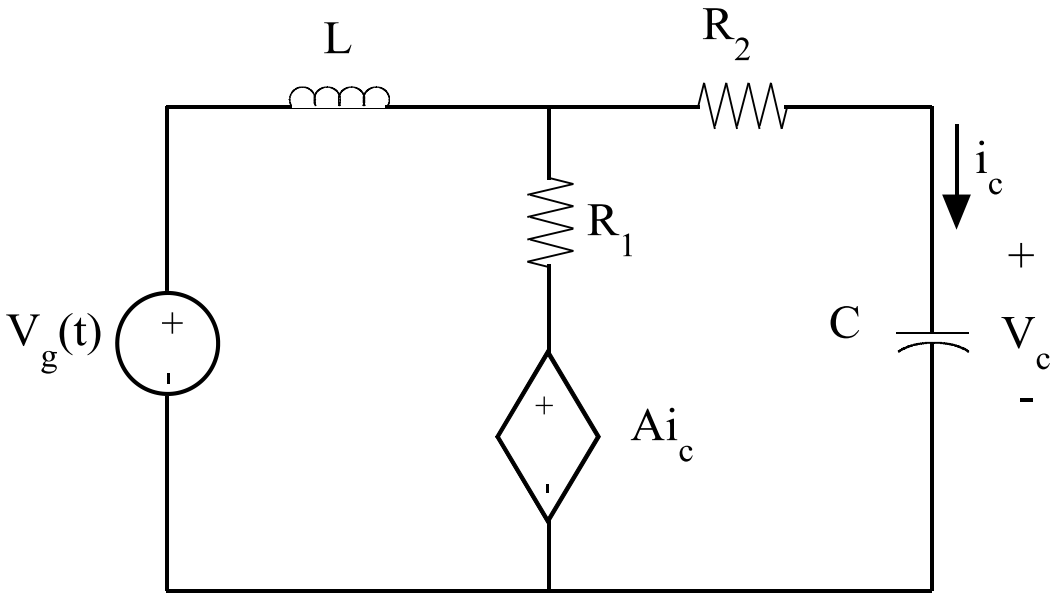


a) Find the general differential equation for $V_c(t)$. The equation should be expressed in terms of the symbolic parameters ($V_c, V_g, R_1, R_2, A, C, L$)and should not be based on the specific numbers given in part (b). $V_c(t)$ (and its derivatives) should be the <u>only</u> unknown in your final equation. (20 points)

Workspace for 3(a)

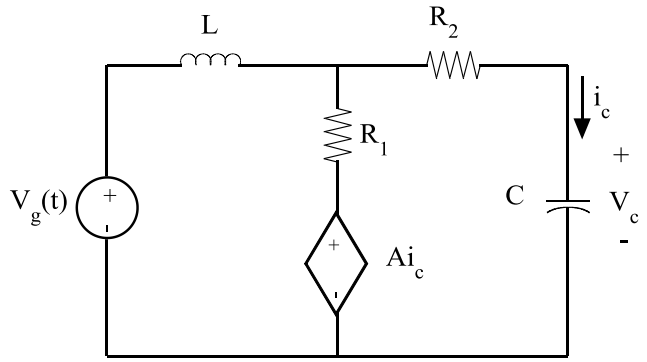

Additional Workspace for 3(a)

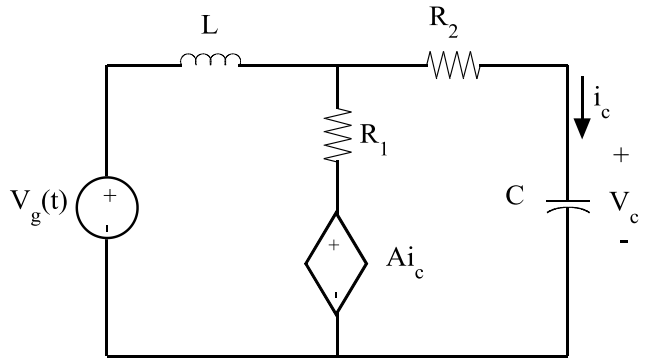

b) *<u>This problem can be done even if you did not complete part (a).</u>*
For previous circuit with the component values:
$R_1 = 2K\Omega \quad R_2 = 500\Omega \quad A = 2K\Omega \quad C = 0.1\mu F \quad L = 0.1H \quad V_g(t) = 1u(t)V$,
find $V_c(t)$ for $t \geq 0$ given that the differential equation is:

$$\frac{d^2V_c}{dt^2} + \left(4x10^4 s^{-1}\right)\frac{dV_c}{dt} + \left(4x10^8 s^{-1}\right)V_c = \text{constant} \ \left(\ for\ t \geq 0\right)$$

Note that the value of the constant forcing function has not been provided. Circuit analysis is required to find the forced solution. In the body of your work, be sure to clearly indicated major intermediate steps (initial conditions, forced solution, natural solution, matching to initial conditions). (15 points)

$V_c(t) =$ _____

_____

Workspace for 3(b)

$R_1 = 2K\Omega \quad R_2 = 500\Omega$

$A = 2K\Omega$

$C = 0.1\mu F \quad L = 0.1H$

$V_g(t) = 1u(t)V$

$$\frac{d^2V_c}{dt^2} + \left(4x10^4 s^{-1}\right)\frac{dV_c}{dt} + \left(4x10^8 s^{-1}\right)V_c = \text{constant } (\ for\ t \geq 0)$$

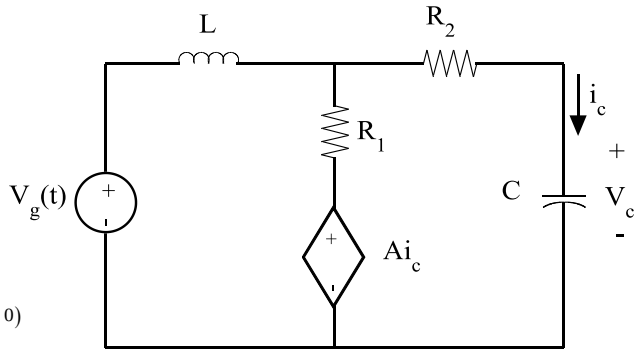

Additional Workspace for 3(b)

$R_1 = 2K\Omega \quad R_2 = 500\Omega$

$A = 2K\Omega$

$C = 0.1\mu F \quad L = 0.1H$

$V_g(t) = 1u(t)V$

$$\frac{d^2V_c}{dt^2} + \left(4x10^4 s^{-1}\right)\frac{dV_c}{dt} + \left(4x10^8 s^{-1}\right)V_c = \text{constant } (\ for\ t \geq 0)$$

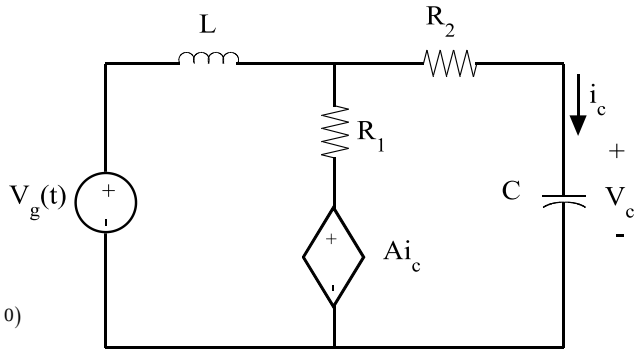

Additional Workspace for 3(b)

$R_1 = 2K\Omega \quad R_2 = 500\Omega$

$A = 2K\Omega$

$C = 0.1\mu F \quad L = 0.1H$

$V_g(t) = 1u(t)V$

$$\frac{d^2V_c}{dt^2} + \left(4x10^4 s^{-1}\right)\frac{dV_c}{dt} + \left(4x10^8 s^{-1}\right)V_c = \text{constant } (\ for\ t \geq 0)$$

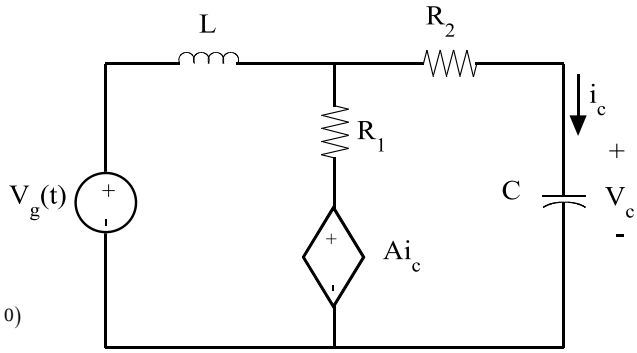

# EECS 215 Exam 2 Equation Sheets

## First Order Circuits

| Source-free RC ($v_s$=0) | Source-free RL ($v_s$=0) |
|---|---|
| 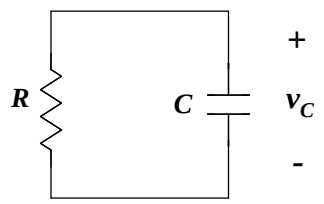 | 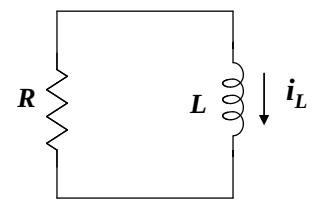 |
| $v_C(t) = v_C(0)e^{-t/RC} = v_C(0)e^{-t/\tau}$ | $i_L(t) = i_L(0)e^{-tR/L} = i_L(0)e^{-t/\tau}$ |

| Step response RC ($v_s$=$V_S$ $u(t)$) | Step response RL ($v_s$=$V_S$ $u(t)$) |
|---|---|
| 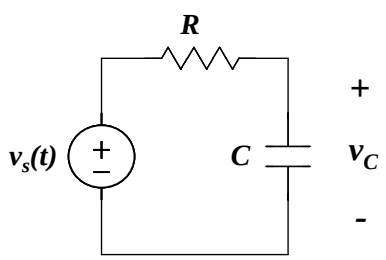 | 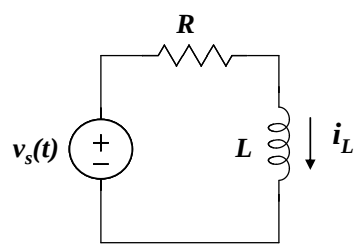 |
| $v_C(t) = V_S + (v_C(0) - V_S)e^{-t/RC}$<br>$v_C(t) = v_C(\infty) + (v_C(0) - v_C(\infty))e^{-t/RC}$ | $i_L(t) = \frac{V_S}{R} + \left(i_L(0) - \frac{V_S}{R}\right)e^{-tR/L}$<br>$i_L(t) = i_L(\infty) + (i_L(0) - i_L(\infty))e^{-tR/L}$ |

**General procedure for first order circuits:**

1) Find Thevenin/Norton equivalent
2) Determine time constant ($R_{eq}C$ or $L/R_{eq}$)
3) Determine initial value for capacitor or inductor.
4) Determine forced solution. For step response, this is the final value. For time dependent input, use trial function in differential equation and determine unknown constants.
5) Apply initial/boundary condition to determine unknown constant.

# Second Order Circuits

| **Source-free Series RLC ($v_s$=0)<br>(or natural solution for series RLC)** | **Source-free Parallel RLC ($v_s$=0)<br>(or natural solution for parallel RLC)** |
|---|---|
| 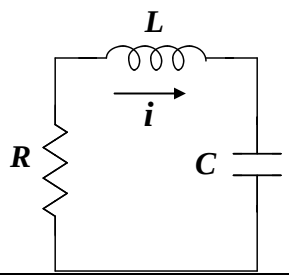 | 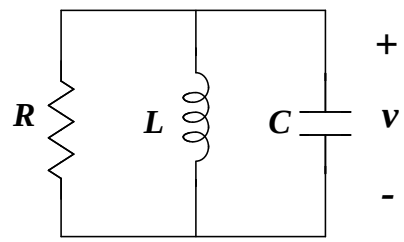 |
| Differential Equation:<br>$\frac{d^2 i}{dt^2} + \frac{R}{L}\frac{di}{dt} + \frac{i}{LC} = 0$ | Differential Equation:<br>$\frac{d^2 v}{dt^2} + \frac{1}{RC}\frac{dv}{dt} + \frac{v}{LC} = 0$ |
| Characteristic Equation:<br>$s^2 + s\frac{R}{L} + \frac{1}{LC} = 0$ | Characteristic Equation:<br>$s^2 + s\frac{1}{RC} + \frac{1}{LC} = 0$ |
| **Source-free Series RLC (continued)** | **Source-free Parallel RLC (continued)** |
| Roots:<br>$s_{1,2} = -\frac{R}{2L} \pm \sqrt{\left(\frac{R}{2L}\right)^2 - \frac{1}{LC}}$<br>$s_{1,2} = -\alpha \pm \sqrt{\alpha^2 - \omega_0^2}$<br>$\alpha = \frac{R}{2L} \qquad \omega_0 = \frac{1}{\sqrt{LC}}$ | Roots:<br>$s_{1,2} = -\frac{1}{2RC} \pm \sqrt{\left(\frac{1}{2RC}\right)^2 - \frac{1}{LC}}$<br>$s_{1,2} = -\alpha \pm \sqrt{\alpha^2 - \omega_0^2}$<br>$\alpha = \frac{1}{2RC} \qquad \omega_0 = \frac{1}{\sqrt{LC}}$ |
| Solutions:<br>Overdamped, $\alpha > \omega_0$<br>$i(t) = A_1 e^{s_1 t} + A_2 e^{s_2 t}$<br>Critically damped, $\alpha = \omega_0$<br>$i(t) = (A_1 t + A_2)e^{-\alpha t}$<br>Underdamped, $\alpha < \omega_0$<br>$i(t) = (B_1 \cos\omega_d t + B_2 \sin\omega_d t)e^{-\alpha t}$<br>$\omega_d = \sqrt{\omega_0^2 - \alpha^2}$ | Solutions:<br>Overdamped, $\alpha > \omega_0$<br>$v(t) = A_1 e^{s_1 t} + A_2 e^{s_2 t}$<br>Critically damped, $\alpha = \omega_0$<br>$v(t) = (A_1 t + A_2)e^{-\alpha t}$<br>Underdamped, $\alpha < \omega_0$<br>$v(t) = (B_1 \cos\omega_d t + B_2 \sin\omega_d t)e^{-\alpha t}$<br>$\omega_d = \sqrt{\omega_0^2 - \alpha^2}$ |

**General procedure for second order circuits:**

1) Get differential equation in form $\frac{d^2 v}{dt^2} + 2\alpha\frac{dv}{dt} + \omega_0^2 v = f(t)$ (or in terms of $i$)
2) Determine $\alpha$ and $\omega_0$ and determine natural solution
3) Determine forced solution (for step response, this is the final/steady state value)
4) Determine initial conditions (e.g. $v(0^+)$ and $dv(0^+)/dt$)
5) Apply initial conditions to complete solution to determine unknown constants