# EECS 215 Winter Semester 2010 Midterm Exam II

Name (last, first): Terry, Fred Solutions

Lecture Section Terry Guo

Rules:

1. Friday, March 26, 2010, 9:00 to 10:30 AM nominal exam time.
   **DO NOT DISCUSS THIS EXAM WITH ANYONE PRIOR UNTIL RECEIVING CTOOLS Announcement!!**
2. Closed Book, etc.
3. 2 Pages (8.5"x11", double sided) of notes allowed
4. Calculators Needed and Allowed. No devices with full alphanumeric keyboards are permitted.
5. **Exam is given under the College of Engineering Honor Code principles and practices.**
6. **No communications of any kind are allowed. Use of cell phones, cameras, personal data assistants, computers, or any other electronic devices, besides approved calculators, will be treated as an Honor Code violation.**
7. Work to be done in Exam booklet. Turn in all pages of the exam.
   Do not unstaple the pages. You may remove the last 2 pages (19-20, FOC&SOC note pages)
8. DO NOT WRITE ON THE BACK OF PAGES.
   Work on backs of pages will NOT be graded.
9. Show your work and *briefly* explain major steps to maximize partial credit.
   (for example: i3=i1+i2, node A, KCL).
   **NO CREDIT WILL BE GIVEN IF NO WORK IS SHOWN.**
10. *WRITE YOUR FINAL ANSWERS IN THE AREAS PROVIDED*

This Exam Contains

**3 problems over 18 pages** (including ample workspace).

**Sign the College of Engineering Honor Code Below.**
**(NO credit will be given for the exam without a signed pledge):**

***I have neither given nor received aid on this examination.***

**Signed:** _____

Do not write below this line

**********

Problem 1 [a b ] Problem 2 [ ]

Problem 3 [a b ]

## Problem 1: First Order Circuits (30 points)

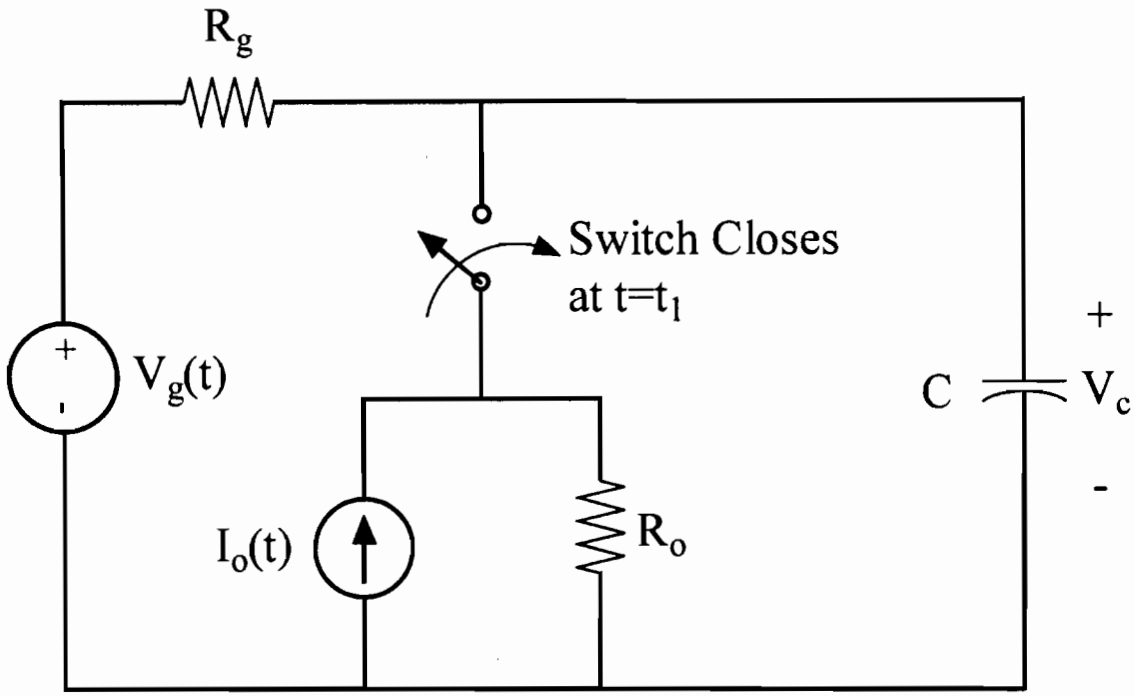


For the circuit above, the switch has been open for a long time (infinitely long) prior to t=0:

a) If we have the following values:
$V_g(t) = 10u(t)V \quad R_g = 500K\Omega \quad I_o(t) = 10\mu A \quad R_o = 2M\Omega \quad C = 1nF$
The switch closes when the capacitor is charged to +5V and this time is defined to be $t_1$ {$V_c(t_1)$=+5V}. Find $V_c(t)$ for $0 \le t < t_1$ and find the value of $t_1$. (15 points)

$V_c(t) = (10V)(1 - e^{-t/\tau_1}) \quad \tau_1 = 0.5ms \quad (0 \le t < t_1)$

$t_1 = -\tau_1 \ln(\frac{1}{2}) \approx +0.3466\ ms$

Before Switch Closes, we have a straight forward RC circuit

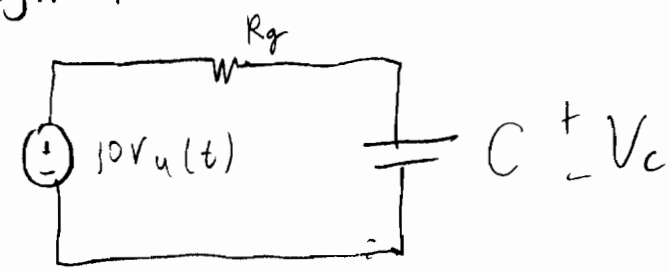

Workspace for 1(a)

$$V_g(t) = 10u(t)V \quad R_g = 500K\Omega \quad I_o(t) = 10\mu A \quad R_o = 2M\Omega \quad C = 1nF$$

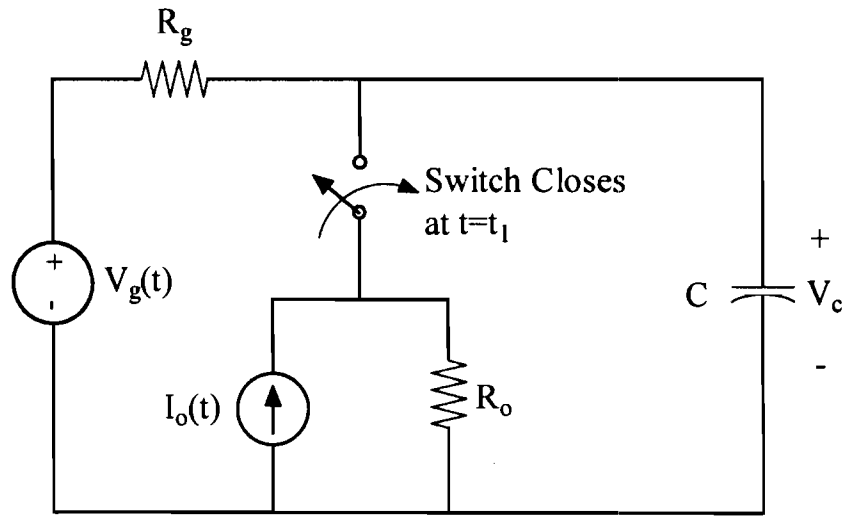


This solution is straight forward

$$V_c(t) = (10V)(1 - e^{-t/\tau_1}) \qquad \tau_1 = R_g C$$

$$= (500K\Omega)(1nF)$$

$$= 5 \times 10^{-4} s$$

$$= 0.5ms$$

or 500ms

$t_1$?

$$V_c(t_1) = 5V = 10(1 - e^{-t_1/\tau_1})V$$

$$\Rightarrow \frac{1}{2} = 1 - e^{-t_1/\tau}$$

$$\Rightarrow e^{-t_1/\tau_1} = \frac{1}{2}$$

$$\Rightarrow t_1 = -\tau_1 \ln \tfrac{1}{2}$$

$$\approx +0.3466 ms$$

b) *This problem can be done even if you did not complete part (a) {just leave $t_1$ as a symbolic constant}.*

Using the same component values as in part (b), find $V_c(t)$ for $t \geq t_1$ . (15 points)

$V_g(t) = 10u(t)V \quad R_g = 500K\Omega \quad I_o(t) = 10\mu A \quad R_o = 2M\Omega \quad C = 1nF$

$$V_c(t) = \frac{\left[12 - 7e^{-(t-t_1)/\tau_2}\right] V}{\tau_2 = 0.4\,ms,\ t_1 \text{ from (a)}} \quad (t \geq t_1)$$

For $t \geq t_1$ our circuit is

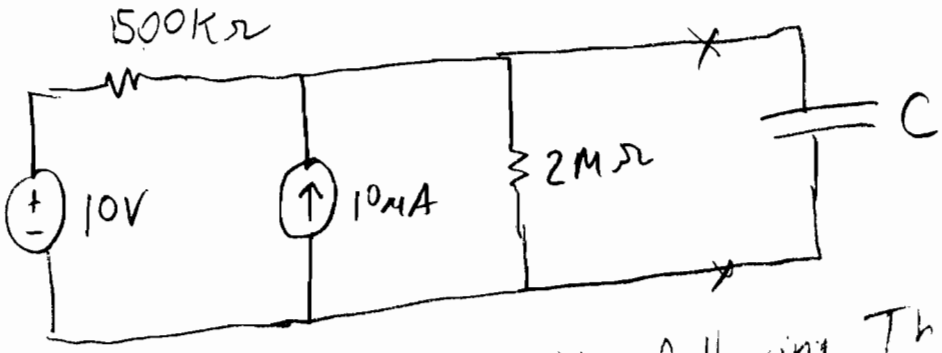


The capacitor sees the following Thevenin Equivalent

$R_{eq} = 500K\Omega \,||\, 2M\Omega = 400K\Omega$ (turn off sources)

$V_{TH} = \left(\frac{2M\Omega}{2M\Omega + 500K\Omega}\right) 10V + 10mA\,(500K\Omega \,||\, 2M\Omega)$

(superposition to get $V_{oc} = V_{TH}$)

$V_{TH} = 8V + 4V = 12V$

so $t \geq t_1$

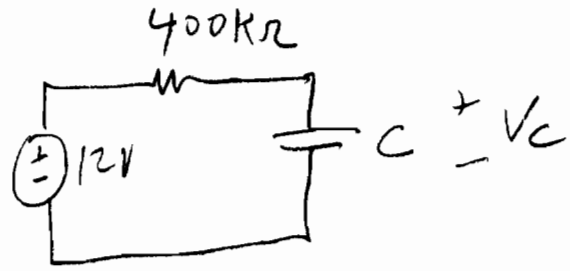


$\Rightarrow V_{cf} = +12V$

Workspace for 1(b)

$$V_g(t) = 10u(t)V \quad R_g = 500K\Omega \quad I_o(t) = 10\mu A \quad R_o = 2M\Omega \quad C = 1nF$$

$\tau_2 = (400K\Omega)C$

$= 0.4ms$

or $400ms$

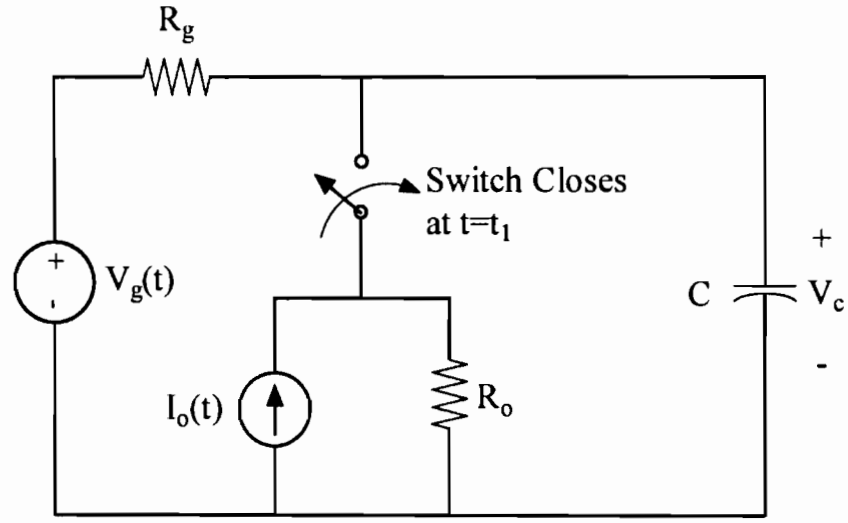


$$V_c(t) = 12V + Ae^{-(t-t_1)/\tau_2}$$

$V_c(t_1) = 5V$ by continuity of $V_c$

$= 12V + A$

$\Rightarrow A = -7$

$$V_c(t) = \left(12 - 7e^{-(t-t_1)/\tau_2}\right) V$$

## Problem 2: Series RLC (35 points)

For the circuit below, find $v_c(t)$ and $i_L(t)$ for $t \geq 0$. Note that the sign conventions for $V_c$ and $i_L$ are defined on the circuit diagram. In the body of your work, be sure to clearly indicate major intermediate steps (initial conditions, forced solution, natural solution, matching to initial conditions).

Use the values:

$$I_o(t) = 2mA \qquad V_g(t) = 12V$$
$$R_o = 1K\Omega \quad R_1 = 4K\Omega \quad R_g = 6K\Omega$$
$$L = 1mH \quad C = 16nF$$

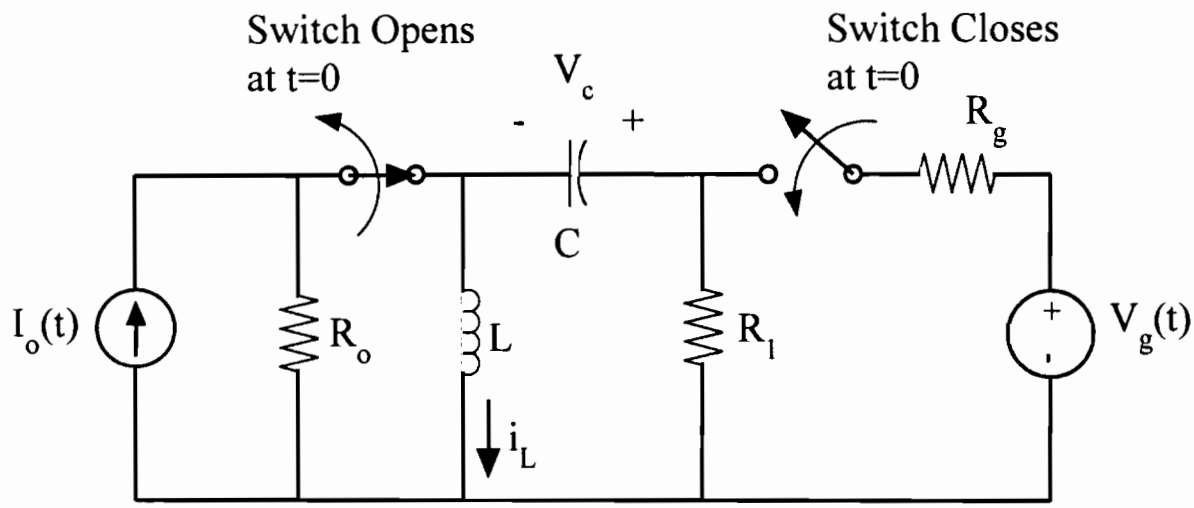


$V_c(t) =$ $4.8V + A_1 e^{s_1 t} + A_2 e^{s_2 t}$

$A_1 \approx -4.801V$, $A_2 \approx +0.5907m$

$i_L(t) =$ $i_c(t) = C[s_1 A_1 e^{s_1 t} + s_2 A_2 e^{s_2 t}]$

Both $s_1 \approx -2.633 \times 10^4 s^{-1}$, $s_2 \approx -2.374 \times 10^6 s^{-1}$

$i_L(t) = (+2.022mA)e^{s_1 t} - (22.43\mu A)e^{s_2 t}$

Intentional written as open kind of problem. Solution is pretty easy, but there was no leading except for labeling this as series RLC

Workspace for problem 2

$I_o(t) = 2mA \quad V_g(t) = 12V$

$R_o = 1K\Omega \quad R_1 = 4K\Omega \quad R_g = 6K\Omega$

$L = 1mH \quad C = 16nF$

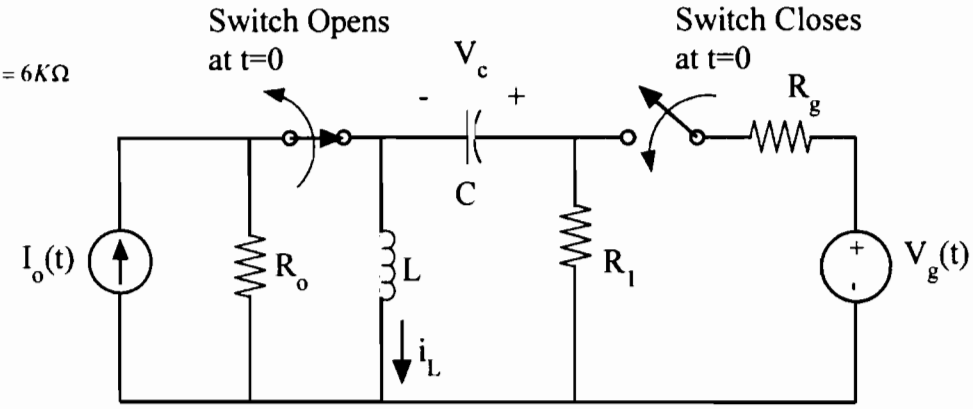


Initial / Boundary Conditions

$i_L(0) = I_0 = 2mA$ (inductor acts like short at DC)

$V_c(0) = 0\,V$

for $t<0$ $\quad V_L = V_c + i_c R_1$

& $V_L = 0$ & $i_c = 0$

hence $V_c = 0$

$t \geq 0$

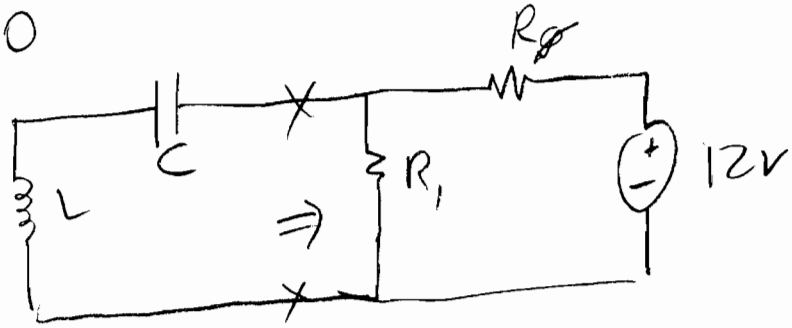


$t \geq 0$

$(R_g \| R_1) = 2.4k\Omega$

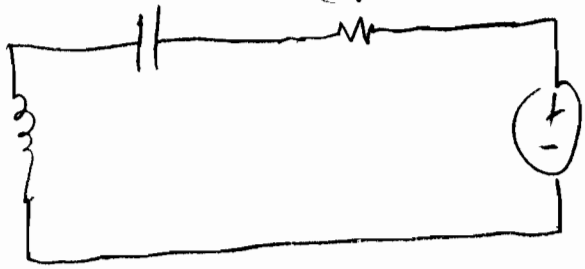

$12V\left(\frac{R_1}{R_1+R_g}\right) = +4.8V$

Additional Workspace for problem 2

$I_o(t) = 2mA \quad V_g(t) = 12V$

$R_o = 1K\Omega \quad R_1 = 4K\Omega \quad R_g = 6K\Omega$

$L = 1mH \quad C = 16nF$

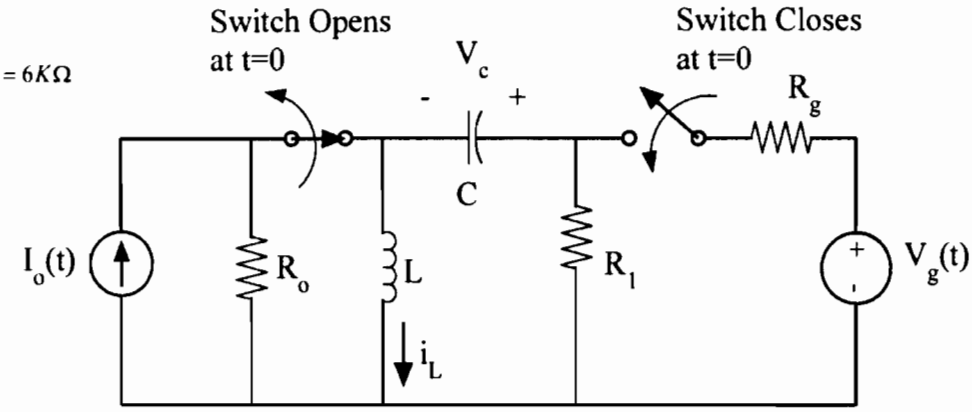


$t = 0$

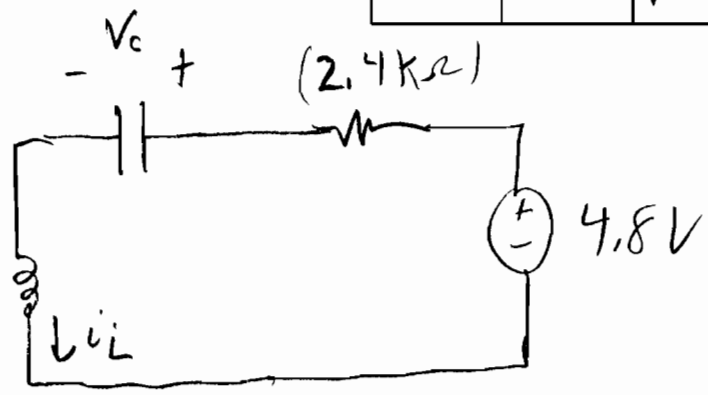


$$\alpha = \frac{R}{2L} = \frac{2.4K\Omega}{2(1mH)} = 1.2 \times 10^6 s^{-1}$$

$$\omega_0 = \left[\frac{1}{LC}\right]^{1/2} = 2.5 \times 10^5 s^{-1}$$

$\alpha > \omega_0 \Rightarrow$ Overdamped natural response

$$s_{1,2} = -a \pm [a^2 - \omega_0^2]^{1/2}$$

$$\simeq -2.633 \times 10^4 s^{-1}, -2.374 \times 10^6 r/s$$

$$V_{cf} = +4.8V$$

$$V_c(t) = 4.8V + A_1 e^{s_1 t} + A_2 e^{s_2 t}$$

$$V_c(0) = 0 = 4.8V + A_1 + A_2$$

$$i_c(0) = i_L(0) = 2mA = C[A_1 s_1 + A_2 s_2]$$

$$\Rightarrow A_1 s_1 + A_2 s_2 = 1.25 \times 10^5 s^{-1}$$

Additional Workspace for problem 2

$I_o(t) = 2mA \quad V_g(t) = 12V$

$R_o = 1K\Omega \quad R_1 = 4K\Omega \quad R_g = 6K\Omega$

$L = 1mH \quad C = 16nF$

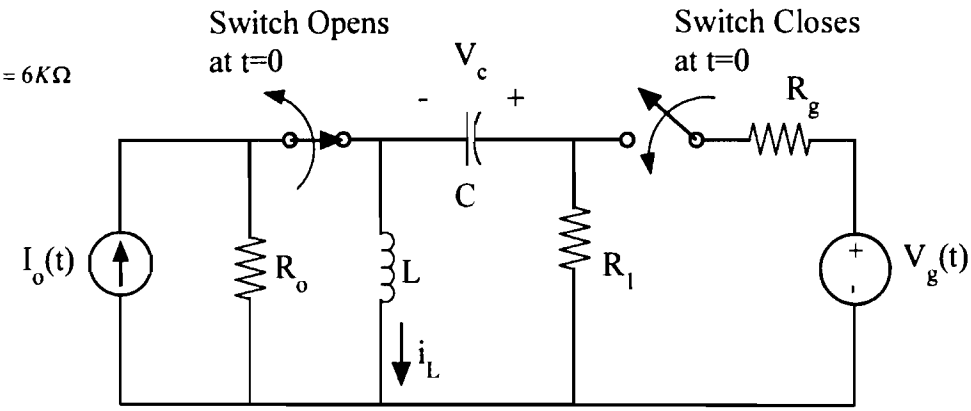


$$A_2 = -(4.8V + A_1)$$

$$A_1 s_1 - (4.8V)s_2 - A_1 s_2 = 1.25\times10^5 e^{-1}$$

$$A_1 = \frac{(4.8V)s_2 + 1.25\times10^5 e^{-1}}{s_1 - s_2} \approx -4.801\,V$$

$$A_2 = +0.5907\,mV$$

$$\underbrace{i_L(t) = i_C(t)}_{\text{for series circuit}} = C[s_1 A_1 e^{s_1 t} + s_2 A_2 e^{s_2 t}]$$

**Problem 3: General RLC (35 points)**

For the circuit below

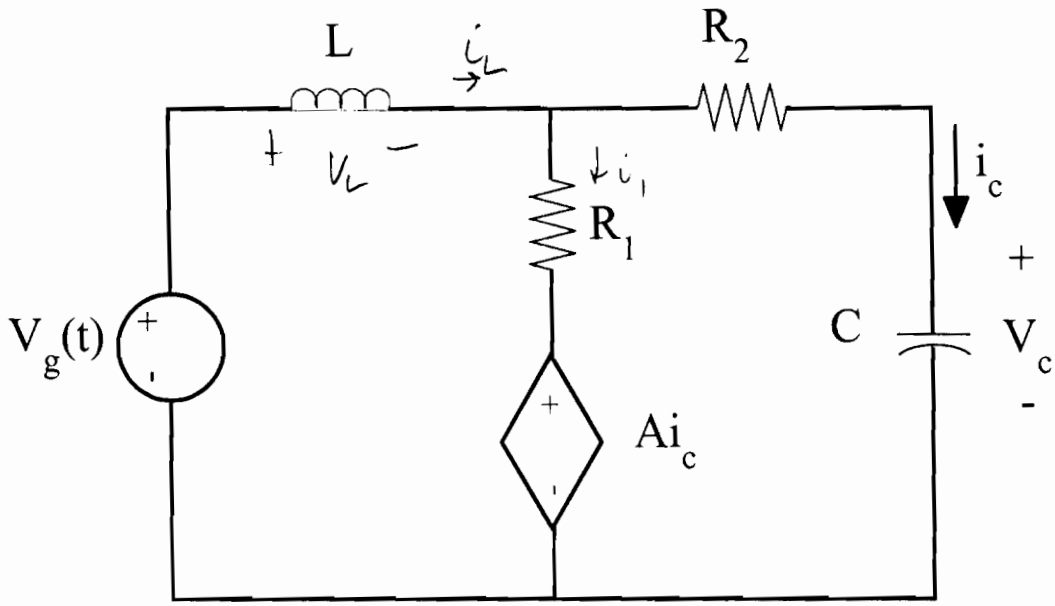


b) Find the general differential equation for $V_c(t)$. The equation should be expressed in terms of the symbolic parameters ($V_c, V_g, R_1, R_2, A, C, L$) and should not be based on the specific numbers given in part (b). $V_c(t)$ (and its derivatives) should be the <u>only</u> unknown in your equation. (20 points)

$$\frac{d^2V_c}{dt^2} + \left(\frac{R_1R_2}{(R_1+R_2-A)}\frac{1}{L} + \frac{1}{(R_1+R_2-A)}\frac{1}{C}\right)\frac{dV_c}{dt}$$

$$+\left(\frac{R_1}{R_1+R_2-A}\right)\frac{1}{LC}V_c = \frac{R_1}{R_1+R_2-A}\frac{1}{LC}V_g$$

$$V_g = V_L + i_1R_1 + Ai_c = V_L + i_cR_2 + V_c \quad KVL$$

$$i_1R_1 + Ai_c = i_cR_2 + V_c \quad KVL$$

$$\Rightarrow i_1 = \frac{1}{R_1}\left[i_c(R_2-A) + V_c\right]$$

$$i_L = i_1 + i_c \quad KCL$$

$$\Rightarrow i_L = \left(1 + \frac{R_2-A}{R_1}\right)i_c + \frac{V_c}{R_1}$$

Workspace for 3(a)

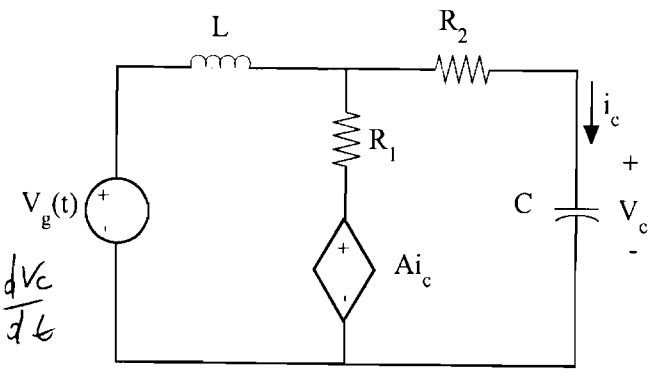


so

$$V_g = L\frac{di_L}{dt} + CR_2\frac{dV_c}{dt} + V_c$$

$$= LC\left(1+\frac{R_2-A}{R_1}\right)\frac{d^2V_c}{dt^2} + \frac{L}{R_1}\frac{dV_c}{dt}$$

$$+ CR_2\frac{dV_c}{dt} + V_c$$

$$= LC\left(\frac{R_1+R_2-A}{R_1}\right)\frac{d^2V_c}{dt^2} + \left(R_2C + \frac{L}{R_1}\right)\frac{dV_c}{dt}$$

$$\left\{\frac{d^2V_c}{dt^2} + \left(\frac{R_1R_2}{(R_1+R_2-A)L} + \frac{1}{(R_1+R_2-A)C}\right)\frac{dV_c}{dt} + \left[\left(\frac{R_1}{R_1+R_2-A}\right)\frac{1}{LC}\right]V_c\right\}$$

$$= \left[\left(\frac{R_1}{R_1+R_2-A}\right)\frac{1}{LC}\right]V_g$$

c) *This problem can be done even if you did not complete part (a).*
For previous circuit with the component values:
$R_1 = 2K\Omega \quad R_2 = 500\Omega \quad A = 2K\Omega \quad C = 0.1\mu F \quad L = 0.1H \quad V_g(t) = 1u(t)V$,
find $V_c(t)$ for $t \geq 0$ given that the differential equation is:

$$\frac{d^2V_c}{dt^2} + \left(4x10^4 s^{-1}\right)\frac{dV_c}{dt} + \left(4x10^8 s^{-1}\right)V_c = \text{constant } (for\ t \geq 0)$$

Note that the value of the constant forcing function has not been provided. Circuit analysis is required to find the forced solution. In the body of your work, be sure to clearly indicated major intermediate steps (initial conditions, forced solution, natural solution, matching to initial conditions). (15 points)

$V_c(t) =$ $1 - (1 + (2\times10^4 s^{-1})t)\, e^{-(2\times10^4 s^{-1})t}$ ✓

Check (a)

$$2\alpha = \left[\frac{R_1R_2}{(R_1+R_2-A)L} + \frac{1}{(R_1+R_2-A)C}\right] = 4\times10^4 \checkmark$$

$$\Rightarrow \alpha = 2\times10^4 s^{-1}$$

$$\omega_0^2 = \left(\frac{R_1}{R_1+R_2-A}\right)\frac{1}{LC} = \frac{2K\Omega}{500\Omega}\,\frac{1}{10^{-8}}$$

$$= 4\times10^8 \checkmark$$

$$\Rightarrow \omega_0 = 2\times10^4 s^{-1}$$

$\alpha = \omega_0 \Rightarrow$ critically damped

$V_{cn} = (A_1 + A_2 t)e^{-\alpha t}$ natural response

Workspace for 3(b)

$t > 0$

$R_1 = 2K\Omega \quad R_2 = 500\Omega$
$A = 2K\Omega$
$C = 0.1\mu F \quad L = 0.1H$
$V_g(t) = 1u(t)V$

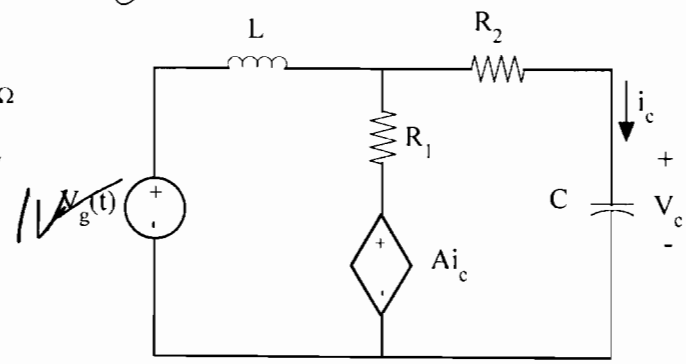


Forced response

$i_C \to 0$ at DC, $V_L \to 0$

$t > \infty$ circuit

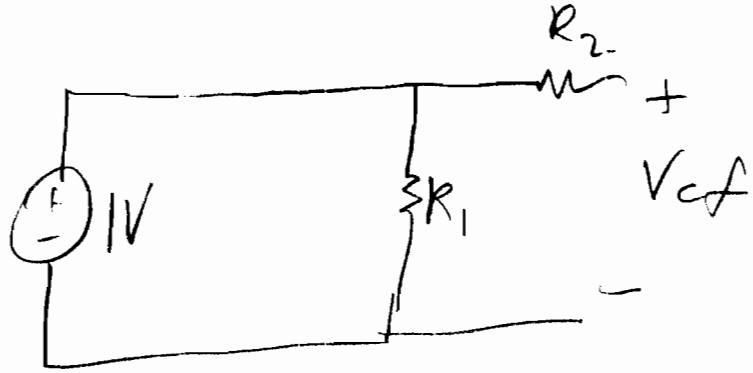


$\Rightarrow V_{cf} = 1V$

Initial conditions

$i_L(0) = 0$, $V_C(0) = 0$

Why? $\boxed{t < 0}$ we have a "Dead" Circuit

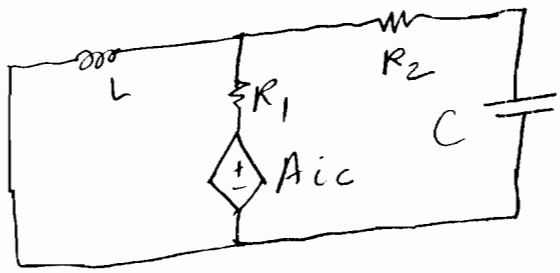


$\Rightarrow$

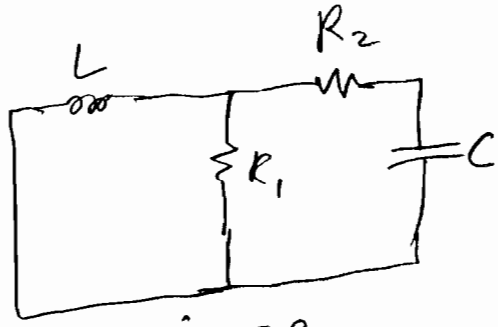


since $i_C = 0$

$t = 0^+$

Additional Workspace for 3(b)

$R_1 = 2K\Omega \quad R_2 = 500\Omega$
$A = 2K\Omega$
$C = 0.1\mu F \quad L = 0.1H$
$V_g(t) = 1u(t)V$

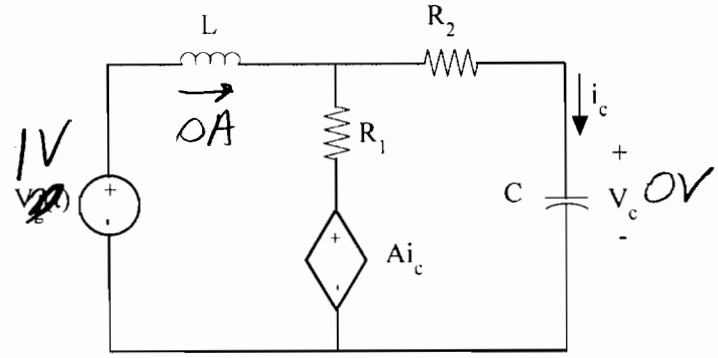


$t = 0^+$

$i_L = i_1 + i_C = 0 \Rightarrow i_1 = -i_C$

$i_1 R_1 + A i_C = R_2 i_C + \cancel{V_C}^{\,0}$

$-i_C R_1 + A i_C = R_2 i_C$

$(-R_2 - R_1 + A)\, i_C = 0 \Rightarrow \underline{i_C = 0}$

$V_C(t) = 1V + (A_1 + A_2 t)e^{-at} = 0$

$\Rightarrow A_1 = -1V$

$i_C(0) = -aA_1 + A_2 = 0 \Rightarrow A_2 = \alpha A_1$
$= -2\times10^4 V/s$

So

$$\boxed{V_C(t) = 1V - (1 + (2\times10^4)t)e^{-(2\times10^4)t}}$$