Solutions

# EECS 215 Winter Semester 2010 Final Exam

Name (last, first): _____

Lecture Section Terry Guo

Rules:

1. Monday, April 26, 2010, 7:00 to 9:00 PM nominal exam time.
   **DO NOT DISCUSS THIS EXAM WITH ANYONE PRIOR UNTIL RECEIVING CTOOLS Announcement!!**
2. Closed Book, etc.
3. 3 Pages (8.5"x11", double sided) of notes allowed
4. Calculators Needed and Allowed. No devices with full alphanumeric keyboards are permitted.
5. **Exam is given under the College of Engineering Honor Code principles and practices.**
6. **No communications of any kind are allowed. Use of cell phones, cameras, personal data assistants, computers, or any other electronic devices, besides approved calculators, will be treated as an Honor Code violation.**
7. Work to be done in Exam booklet. Turn in all pages of the exam.
   Do not unstaple the pages. You may remove the last 3 pages (25-27, FOC, SOC, Bode note pages)
8. DO NOT WRITE ON THE BACK OF PAGES.
   Work on backs of pages will NOT be graded.
9. Show your work and *briefly* explain major steps to maximize partial credit.
   (for example: i3=i1+i2, node A, KCL).
   **NO CREDIT WILL BE GIVEN IF NO WORK IS SHOWN.**
10. *WRITE YOUR FINAL ANSWERS IN THE AREAS PROVIDED*

This Exam Contains

**4 problems over 27 pages** (including ample workspace).

**Sign the College of Engineering Honor Code Below.**
**(NO credit will be given for the exam without a signed pledge):**

***I have neither given nor received aid on this examination.***

**Signed:** _____

Do not write below this line

**********

Problem 1 [a b ] Problem 2 [a b c ]

Problem 3 [ ] Problem 4 [a b ]

# Problem 1: Transient Response (30 Points)

a) For the circuit below, find the general differential equation for $v_c(t)$. The equation should be expressed in terms of the symbolic parameters ($V_c, V_g, R_1, R_2, A, C, L$) and should not be based on the specific numbers given in part (b). $V_c(t)$ (and its derivatives) should be the <u>only</u> unknown in your final equation. You may use either time domain or s-domain methods. (Prof. Terry found the time-domain approach to be faster on this one, but either will work) (15 points)

$$\left\{ \frac{d^2 V_c}{dt^2} + \left( \frac{1}{R_1 C} + \frac{R_2}{L} \right) \frac{dV_c}{dt} + \frac{1}{LC} \left( 1 + \frac{R_2}{R_1} + A R_2 \right) V_c \right\}$$

$$= \frac{1}{LC} \frac{R_2}{R_1} V_g + \frac{1}{R_1 C} \frac{dV_g}{dt}$$

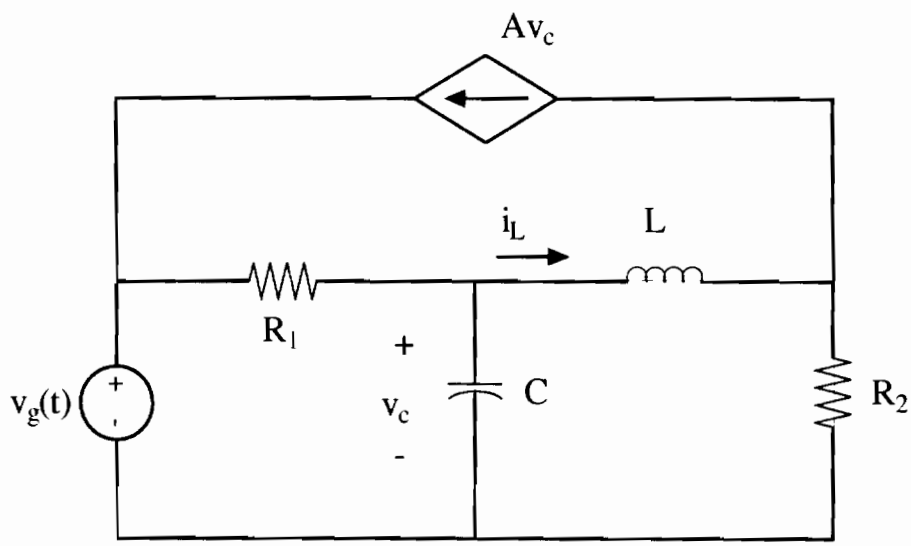

Workspace for 1 (a)

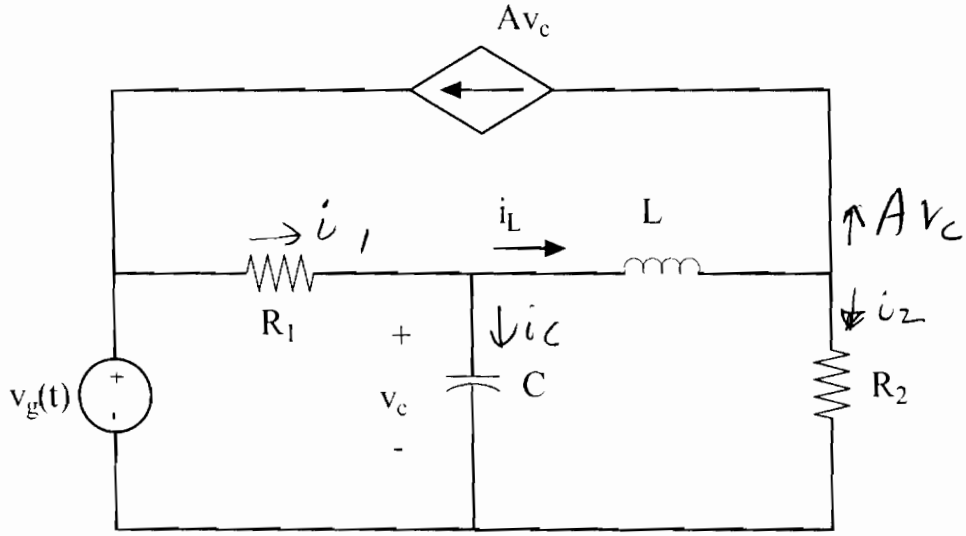


① $i_1 = i_C + i_L$ KCL

$= C V_c' + i_L$

② $i_L = A V_c + i_2 \Rightarrow i_2 = i_L - A V_c$ KCL

③ $V_g = i_1 R_1 + V_c = (R_1 C V_c' + R_1 i_L + V_c)$ KVL & ①

④ $V_c = V_L + i_2 R_2$ KVL

$= L i_L' + R_2 (i_L - A V_c)$ from ②

③ → $i_L = [(V_g - V_c)/R_1 - C V_c']$ plug into ④

⑤ $V_c = \frac{L V_g'}{R_1} - \frac{L}{R_1} V_c' - L C V_c''$

$+ \frac{R_2}{R_1} V_g - \frac{R_2}{R_1} V_c - R_2 C V_c' - R_2 A V_c$

Additional Workspace for 1 (a)

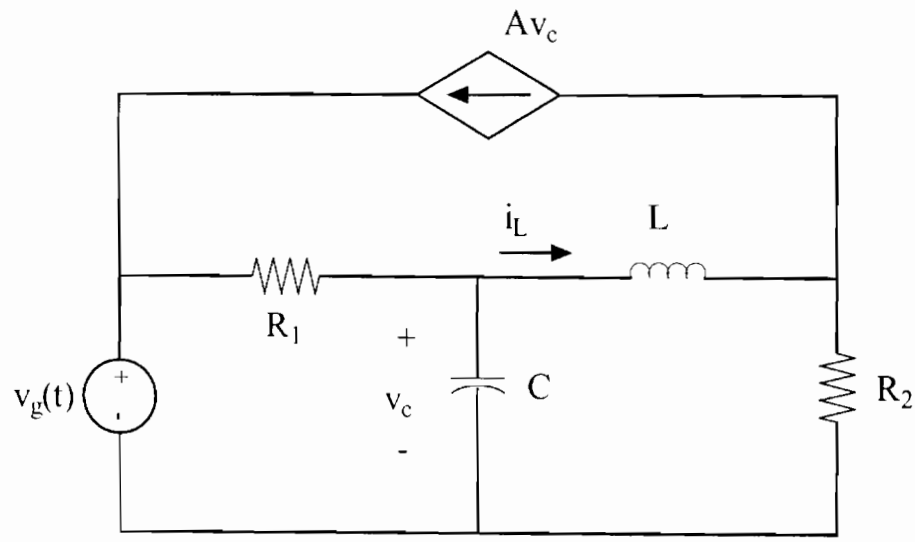


Collecting terms

$$\left[(LC)V_c'' + \left(\frac{L}{R_1} + R_2C\right)V_c' + \left(1 + \frac{R_2}{R_1} + AR_2\right)V_c\right] = \frac{R_2}{R_1}V_g + \frac{L}{R_1}V_g'$$

or

$$\left[V_c'' + \left(\frac{1}{R_1C} + \frac{R_2}{L}\right)V_c' + \frac{1}{LC}\left(1 + \frac{R_2}{R_1} + AR_2\right)V_c\right] = \left[\frac{1}{LC}\frac{R_2}{R_1}V_g + \frac{1}{R_1C}V_g'\right]$$

Workspace for 1 (a)

$\boxed{\text{S-Domain}}$

$V_1 = V_c$
use $V_1$ to avoid confusion between subscript + $Cs$

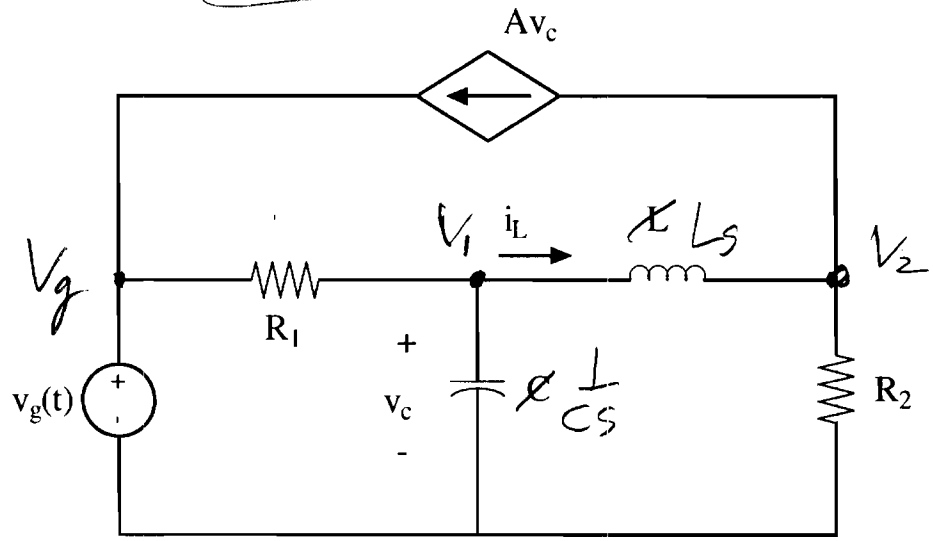


① $$\frac{V_1 - V_g}{R_1} + V_1 Cs + \frac{V_1 - V_2}{Ls} = 0 \qquad \text{KCL}$$

$$\Rightarrow V_1\left[\frac{1}{R_1} + Cs + \frac{1}{Ls}\right] + V_2\left[-\frac{1}{Ls}\right] = \frac{V_g}{R_1}$$

② $$\frac{V_2 - V_1}{Ls} + \overset{Av_c}{AV_1} + V_2/R_2 = 0$$

$$\Rightarrow V_1\left[-\frac{1}{Ls} + A\right] + V_2\left[\frac{1}{Ls} + \frac{1}{R_2}\right] = 0$$

$$\Rightarrow V_2 = \frac{V_1\left[\frac{1}{Ls} - A\right]}{\left[\frac{1}{Ls} + \frac{1}{R_2}\right]} \qquad \text{Plug into ①}$$

$$V_1\left[\frac{1}{R_1} + Cs + \frac{1}{Ls}\right] + V_1 \frac{\left[A - \frac{1}{Ls}\right]}{1 + \frac{Ls}{R_2}} = \frac{V_g}{R_1}$$

Additional Workspace for 1 (a)

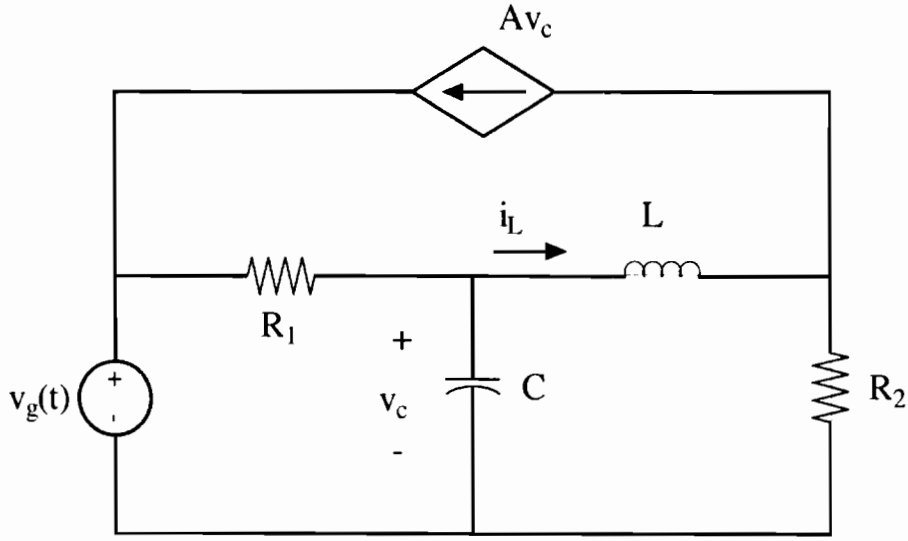


$$V_1\left[\frac{1}{R_1}+Cs+\frac{1}{Ls}\right]+V_1\frac{\left(A-\frac{1}{Ls}\right)R_2}{R_2+Ls}=\frac{V_g}{R_1}$$

$$V_1\left\{\frac{R_1LCs^2+Ls+R_1}{R_1Ls}+\frac{\left(A-\frac{1}{Ls}\right)R_2}{R_2+Ls}\right\}=\frac{V_g}{R_1}$$

$$V_1\left\{\frac{R_1LCs^2+Ls+R_1}{R_1}+\frac{AR_2Ls-R_2}{R_2+Ls}\right\}=V_g\frac{Ls}{R_1}$$

$$V_1\left\{(R_2+Ls)(R_1LCs^2+Ls+R_1)+R_1(AR_2Ls-R_2)\right\}$$
$$=(R_2+Ls)Ls\,V_g$$

$$V_1\{R_1R_2LCs^2+R_2Ls+R_1R_2+R_1L^2Cs^3+L^2s^2+R_1Ls$$
$$+AR_1R_2Ls-R_1R_2\}=(R_2+Ls)Ls\,V_g$$

$$V_1\{(R_1R_2LC+L^2)s^2+R_1L^2Cs^3+(R_2+R_1+AR_1R_2)Ls\}$$
$$=(R_2+Ls)Ls\,V_g$$

(Divide both sides by $Ls$)

$$V_1 \{ R_1 L C s^2 + (R_1 R_2 C + L) s + (R_1 + R_2 + A R_1 R_2) \}$$

$$= (R_2 + L s) V_g$$

$$V_1 \{ s^2 + \left( \frac{R_2}{L} + \frac{1}{R_1 C} \right) s + \frac{1}{LC} \left( 1 + \frac{R_2}{R_1} + A R_2 \right) \}$$

$$= \frac{1}{LC} \left( \frac{R_2}{R_1} + \frac{L}{R_1} s \right) V_g$$

$$= \left( \frac{1}{LC} \frac{R_2}{R_1} + \frac{1}{R_1 C} s \right) V_g$$

$\Rightarrow$ maps back to $(V_c \equiv V_1)$

$$\frac{d^2 V_c}{dt^2} + \left( \frac{1}{R_1 C} + \frac{R_2}{L} \right) \frac{dV_c}{dt} + \frac{1}{LC} \left( 1 + \frac{R_2}{R_1} + A R_2 \right) V_c$$

$$= \frac{1}{LC} \frac{R_2}{R_1} V_g + \frac{1}{R_1 C} \frac{dV_g}{dt}$$

Obviously works, but more tedious than time domain

b) *This problem can be done even if you did not complete part (a).*
If we use the following component values, the resulting differential equation for t>0 is given below. Find $v_c(t)$ for t>0. (15 points)

$$v_g(t) = 1u(t)V \quad R_1 = R_2 = 1K\Omega \quad A = 7x10^{-3}\Omega^{-1} \quad C = 1nF \quad L = 1mH$$

$$\frac{d^2v_c}{dt^2} + \left(2x10^6 s^{-1}\right)\frac{dv_c}{dt} + \left(9x10^{12} s^{-2}\right)v_c = \left(1x10^{12} V \bullet s^{-2}\right) \quad for\, t > 0$$

$V_c(t) =$ $\frac{1}{9}\{1 + [-\cos(\omega_d t) + 2\sqrt{2}\sin(\omega_d t)]e^{-\alpha t}$

$\omega_d = 2\sqrt{2} \times 10^6 r/s$. $\alpha = 1 \times 10^6 r/s$

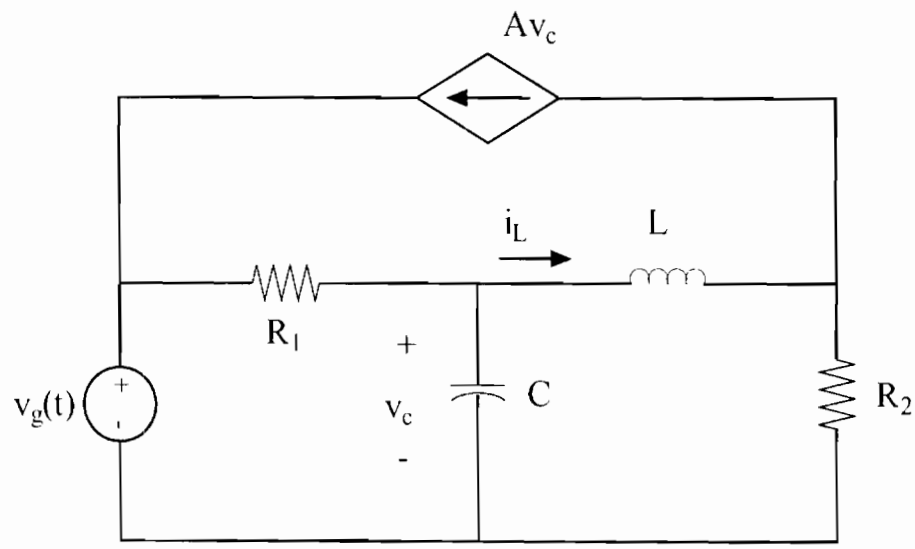


$\alpha = 1 \times 10^6 s^{-1}$ $\omega_0 = (9 \times 10^{12} s^{-1})^{1/2} = 3 \times 10^6 s^{-1}$

$\omega_0 > \alpha \Rightarrow$ underdamped

$V_{cn}(t) = [B_1 \cos(\omega_d t) + B_2 \sin(\omega_d t)]e^{-\alpha t}$

$\omega_d = (\omega_0^2 - \alpha^2)^{1/2} = (9-1)^{1/2} \times 10^6 = \sqrt{8} \times 10^6 s^{-1}$

$= 2\sqrt{2} \times 10^6 r/s$

Workspace for 1(b)

$v_g(t) = 1u(t)V \quad R_1 = R_2 = 1K\Omega \quad A = 7x10^{-3}\Omega^{-1} \quad C = 1nF \quad L = 1mH$

$$\frac{d^2v_c}{dt^2} + \left(2x10^6 s^{-1}\right)\frac{dv_c}{dt} + \left(9x10^{12} s^{-2}\right)v_c = \left(1x10^{12} V \bullet s^{-2}\right) \quad for\, t > 0$$

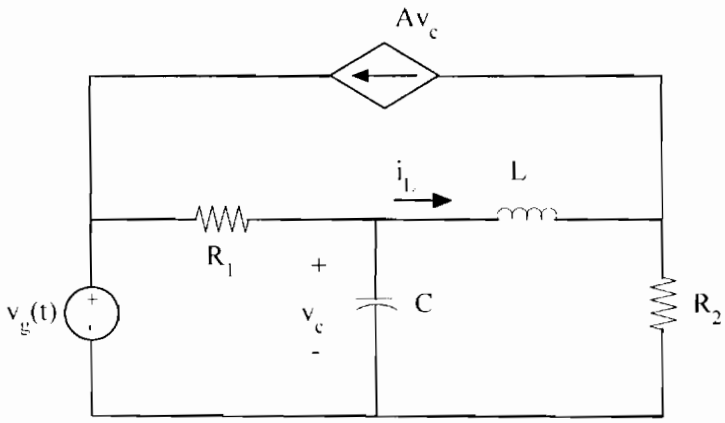


taking $\frac{d}{dt} \to 0$

yields

$V_{cf} = +\frac{1}{9}V$ from differential eqn.

verify from circuit at DC

$i_c \to 0$, $V_L \to 0$

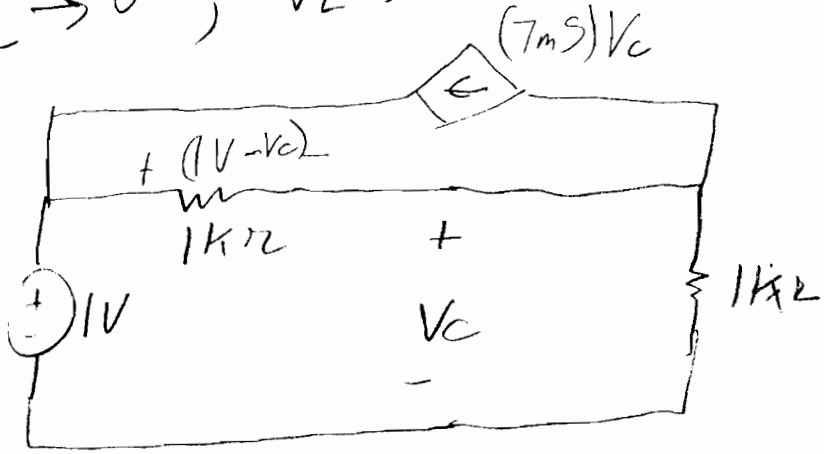


$$\frac{1V - V_c}{1K\Omega} = \frac{V_c}{1K\Omega} + (7mS)V_c$$

$$\Rightarrow 1V = 2V_c + 7V_c = 9V_c$$

$$\Rightarrow V_c = \frac{1}{9}V \quad \checkmark$$

Additional Workspace for 1(b)

$v_e(t) = 1u(t)V \quad R_1 = R_2 = 1K\Omega \quad A = 7x10^{-3}\Omega^{-1} \quad C = 1nF \quad L = 1mH$

$$\frac{d^2 v_c}{dt^2} + \left(2x10^6 s^{-1}\right)\frac{dv_c}{dt} + \left(9x10^{12} s^{-2}\right)v_c = \left(1x10^{12} V \cdot s^{-2}\right) \quad for\ t > 0$$

$t = 0^+$

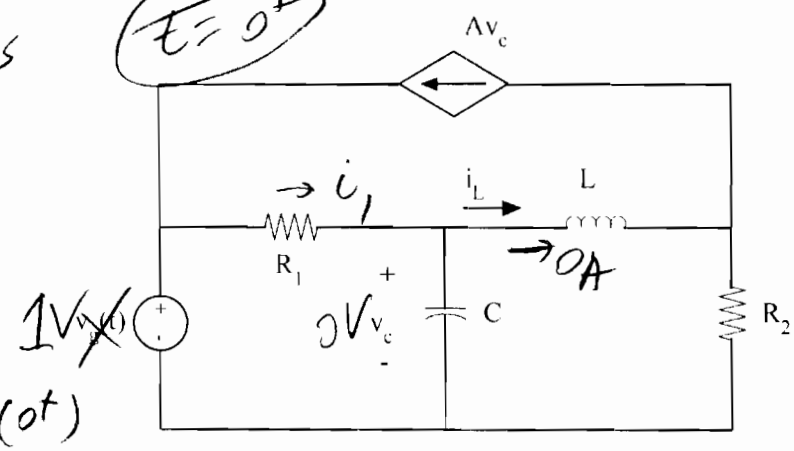


Bound. Conditions

$V_c(0) = 0$

$i_L(0^-) = 0$

$i_c(0^+)$ ?

$$i_1 = \frac{1V}{R_1} = i_c(0^+)$$

$$i_c(0^+) = +1m\ A$$

$$V_c(t) = \frac{1}{9}V + \left(B_1 \cos(\omega_d t) + B_2 \sin(\omega_d t)\right)e^{-\alpha t}$$

$$V_c(0) = 0 = \frac{1}{9}V + B_1 \Rightarrow B_1 = -\frac{1}{9}V$$

$$i_c(0^+) = C\left[-\alpha B_1 + B_2 \omega_d\right] = 1m\ A$$

$$-\alpha B_1 + B_2 \omega_d = \frac{1m\ A}{1nF} = +10^6\ V/s$$

$$B_2 = \frac{1}{\omega_d}\left[10^6\ V/s + \alpha B_1\right]$$

$$= \left(\frac{1}{2\sqrt{2}\ X10^6}\right)\left[\frac{8}{9}\ X10^6\right] = +\frac{2\sqrt{2}}{9}\ V$$

---

$$V_c(t) = \frac{1}{9} + \left[-\frac{1}{9}\cos(\omega_d t) + \frac{2\sqrt{2}}{9}\sin(\omega_d t)\right]e^{-\alpha t}$$

$$\omega_d = 2\sqrt{2}\ X10^6\ r/s \qquad \alpha = 1X10^6\ r/s$$

## Problem 2: AC Steady State & AC Power (35 Points)

For the circuit on the following page:

a) Write down a complete set of five phasor domain nodal analysis equations that you would need to find the phasors of the unknown node voltages $V_1$, $V_2$, $V_3$, $V_o$, and the controlling variable $i_c$. Indicate the major reason (KVL, KCL) for each equation. *You are not required to numerically solve these equations.* (15 points)

1) $\frac{V_1 - 10V}{1K\Omega} + \frac{V_1 - V_2}{j4K\Omega} + \frac{V_1 - V_o}{4K\Omega} = 0$ KCL node 1

2) $\frac{V_2 - V_1}{j4K\Omega} + \frac{V_2}{-j1K\Omega} + \frac{V_3 - 10V}{5K\Omega} + \frac{V_3 - V_o}{j6K\Omega} = 0$ SN KCL

3) $\frac{V_o - V_3}{j6K\Omega} + I_{LO} = 0$ KCL at node (P)

4) $(2K\Omega)\, i_c = V_3 - V_2$ KVL

5) $i_c = V_2 / (-j1K\Omega)$ KVL/ impedance of cap

Circuit and workspace for 2(a)

Phasor Domain

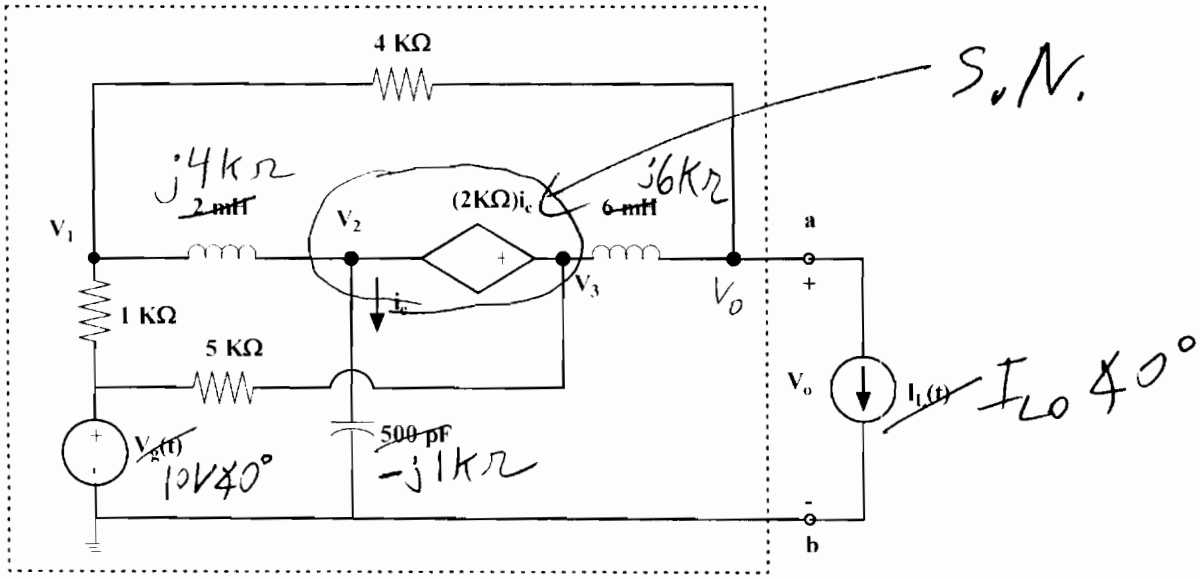


$V_g(t)=10V\cos(\omega t)$
$\omega=2\times10^6$ r/s

$I_L(t)=I_{Lo}\cos(\omega t)$
$\omega=2\times10^6$ r/s

(1) KCL $\quad \dfrac{V_1-10V}{1k\Omega}+\dfrac{V_1-V_2}{j4k\Omega}+\dfrac{V_1-V_o}{4k\Omega}=0$

(2) KCL SN $\quad \dfrac{V_2-V_1}{j4k\Omega}+\dfrac{V_2}{-j1k\Omega}+\dfrac{V_3-10V}{5k\Omega}+\dfrac{V_3-V_o}{j6k\Omega}=0$

(3) KCL $\quad \dfrac{V_o-V_3}{j6k\Omega}+I_{Lo}=0$

(4) KVL $\quad (2k\Omega)\,i_c=V_3-V_2$

(5) Impedance/KVL $\quad i_c=V_2/(-j1k\Omega)$

*For (b) and (c) part, do not attempt to numerically solve (a)*. The following provides all the information you need: assume that the exact phasor domain result for part (a) is:

$$V_o = -\left[\left(\frac{5{,}642{,}000}{1{,}517} + \frac{2{,}439{,}000}{1{,}517}j\right)\Omega\right] I_{Lo} + \left(\frac{4{,}028}{7{,}585} + \frac{1{,}894}{7{,}585}j\right) 10V$$

Additional workspace for 2(b)

$|I_N| \cong 1.4483$ mA

$\angle I_N \approx 0.0315$ rad $\approx +1.805°$

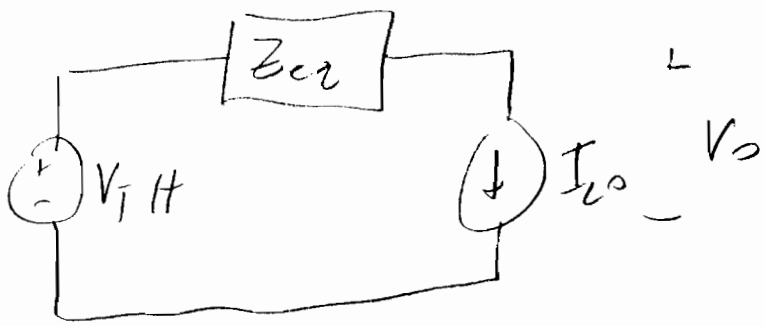


Phasor Domain Picture

$V_o = V_{TH} - I_{Lo} Z_{eq}$

Hence $Z_{eq} = +\left[\frac{5{,}642{,}000 + j\,2{,}439{,}000}{1{,}517}\right]$

$\approx (3.719 + j\,1.608)$ kΩ

*For (b) and (c) part, do not attempt to numerically solve (a)*. The following provides all the information you need: assume that the exact phasor domain result for part (a) is:

$$V_o = -\left[\left(\frac{5{,}642{,}000}{1{,}517} + \frac{2{,}439{,}000}{1{,}517}j\right)\Omega\right] I_{Lo} + \left(\frac{4{,}028}{7{,}585} + \frac{1{,}894}{7{,}585}j\right) 10V$$

b) For the circuit in the box (the dashed box), what is the open circuit output voltage $V_o(t)=V_{TH}(t)$ (the measurable, time domain response) and what is the short circuit or Norton current $I_N(t)$ (the measurable, time domain response)? What is the complex output impedance $Z_{eq}$ at $\omega=2\times10^6$ r/s in a+jb format (10 points)

$V_{TH}(t)$ = $(5.868)\cos[(2\times10^6)t + 25.1833°]$ V

$I_N(t)$= $1.4483\cos[(2\times10^6)t + 1.805°]$ mA

$Z_{eq}$= $[3.719 + j\,1.608]$ KΩ

$V_{TH}$? set $I_{Lo} = 0$

$|V_{TH}| = 10V\left|\frac{4{,}028}{7{,}585} + \frac{1{,}894}{7{,}585}j\right| \cong 5.868\ V$

$\measuredangle V_{TH} = \tan^{-1}\left(\frac{1894}{4028}\right) \cong 0.4395$ rads

$\cong +25.1833°$

$I_N$? set $V_o = 0$

$I_{Lo,sc} = I_N$ (phasor) $= \dfrac{-\frac{(4{,}028 + j1{,}894)}{7{,}585}}{-\left[\frac{5{,}642{,}000 + j(2{,}439{,}000)}{1{,}517}\right]}$

$\simeq (1.448 + 0.0456j)$ mA

*For (b) and (c) part, do not attempt to numerically solve (a)*. The following provides all the information you need: assume that the exact phasor domain result for part (a) is:

$$V_o = -\left[\left(\frac{5{,}642{,}000}{1{,}517} + \frac{2{,}439{,}000}{1{,}517}j\right)\Omega\right] I_{Lo} + \left(\frac{4{,}028}{7{,}585} + \frac{1{,}894}{7{,}585}j\right) 10V$$

c) If a *passive* load is connected at the output of the boxed circuit (as illustrated below), find the load impedance ($Z_L$) that results in maximum power transfer. What is the average dissipated power ($P_{AV}$)? If the load $Z_L$ is modeled as a resistor in series with either a capacitor or inductor, find the R and L or C required. (10 points)

$Z_L$= 3.719 kΩ +j (−1.608 kΩ)

$P_{av}$= 1.157 mW

$R_L$= 3.719 kΩ

And either:

$L_L$= _____ H

or

$C_L$= 311 pF

$Z_L = Z_{eq}^*$

$P_{AV} = \frac{1}{8}\frac{|V_{TH}|^2}{R_{eq}} \cong 1.1574\ mW$

$R_L \cong 3.719\ k\Omega$

$X_L = -1.608\ k\Omega$ capacitative

$C_L = \frac{1}{\omega|X_L|} \cong 3.11 \times 10^{-10}\ F$

$\left(\frac{1}{j\omega C} = jX_L\right)$ $\cong 311\ pF$

## 3. Passive Filters and Bode Plots (15 points)

For the circuit below, if we have the component values below, the following 4 Bode plots all correct for the transfer functions

$H_{c1}(s) = v_{c1}/v_{in}$ , $H_{c2}(s) = v_{c2}/v_{in}$ , $H_L(s) = v_L/v_{in}$ , *and* $H(s) = v_{out}/v_{in}$ .

**Which Bode plot represents** $H(s) = v_{out}/v_{in}$ **and how do you know**? *Note: solving for the transfer function is not required and attempting this is not recommended.* (15 points)

$C_1$=$C_2$=9.50548nF L=111.813$\mu H$ $R_1$=$R_2$=50Ω

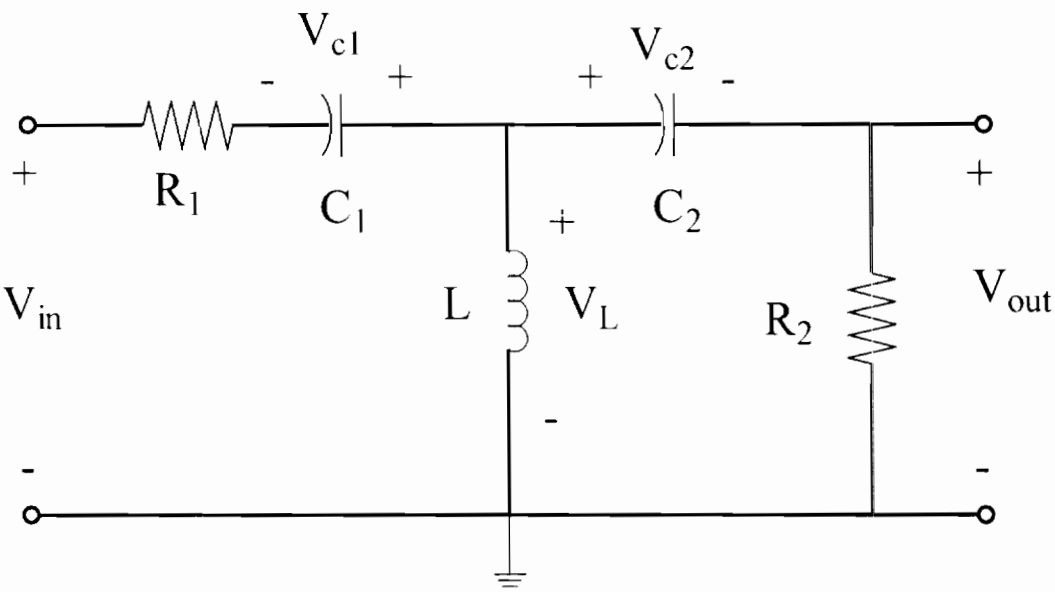


The correct bode plot is (circle only one):

A B C D

Explain your reasoning clearly and succinctly. No credit given without valid reasons.

From circuit analysis, this is a 3rd orde High Pass filter

$\omega \to 0$ cap's to open, L → short $V_{out} = 0$

$\omega \to \infty$ cap's to short, L → open $|V_{out}| = \frac{R_2}{R_1+R_2} = \frac{1}{2} = -6\,dB$

3rd order since we have 1L, 2C's

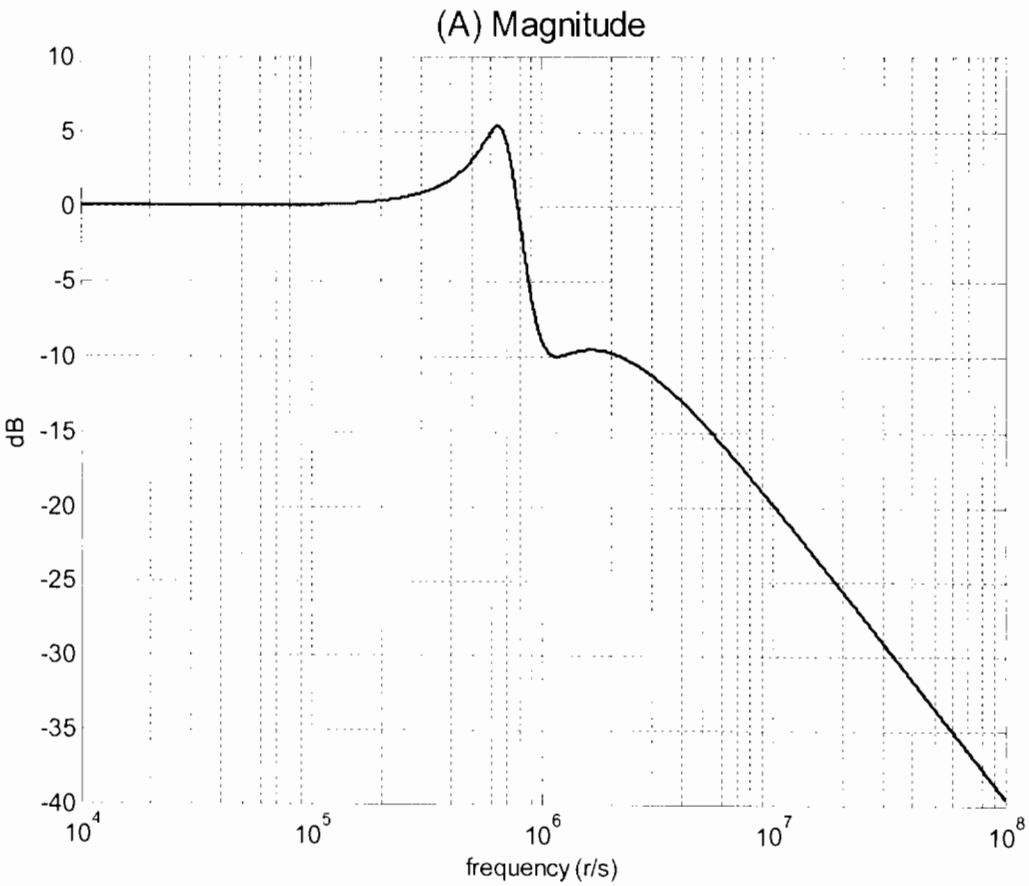


X not a high pass response

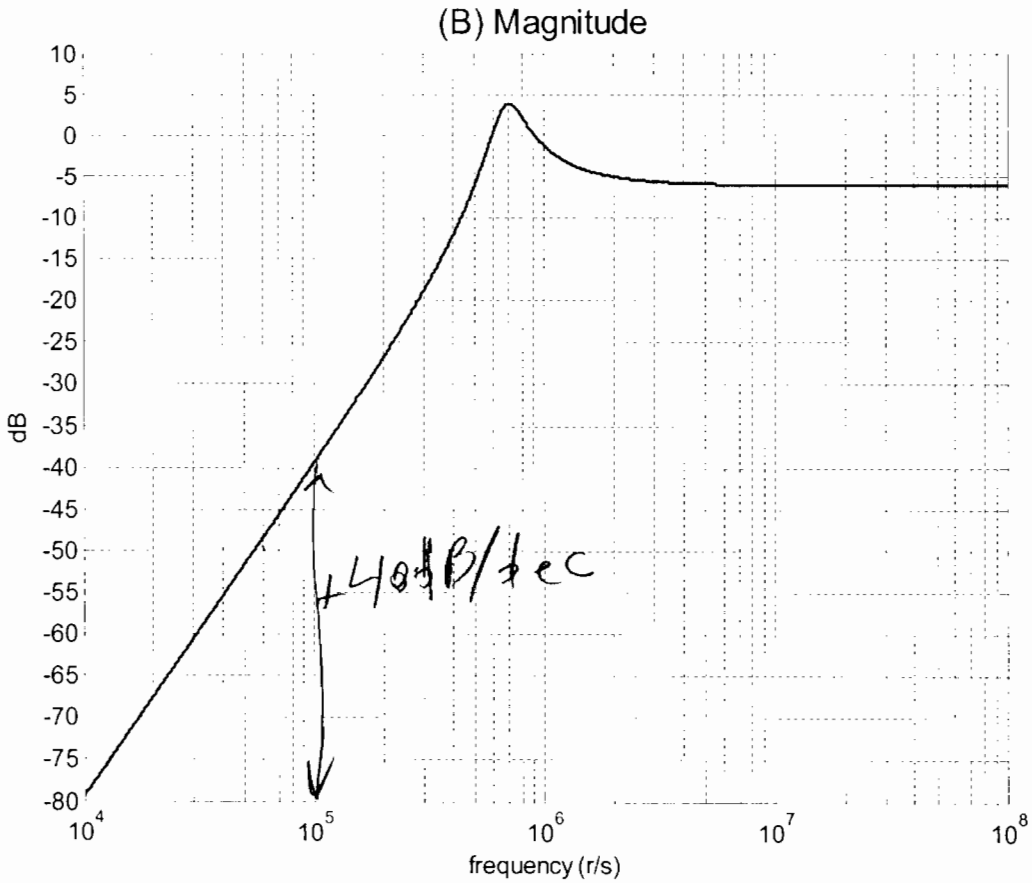


X High Pass Response
But only 2nd order
DC zero

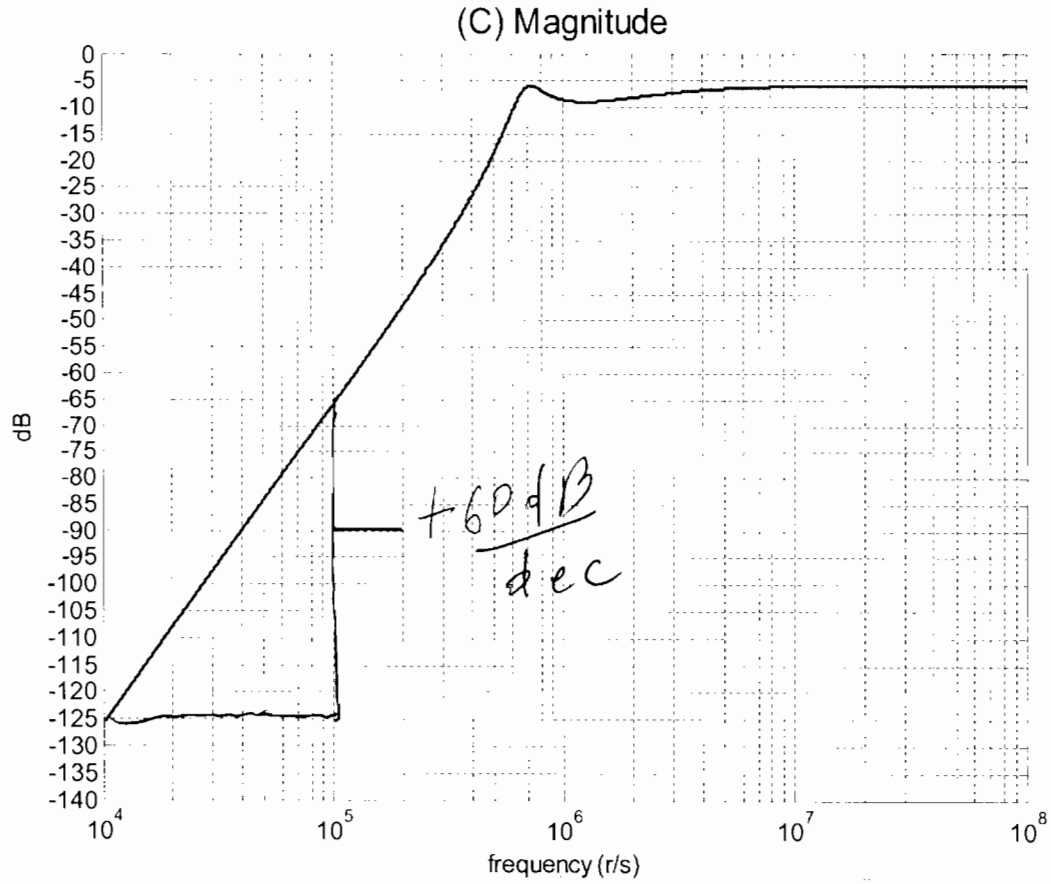


this must be it
High Pass + 3rd order

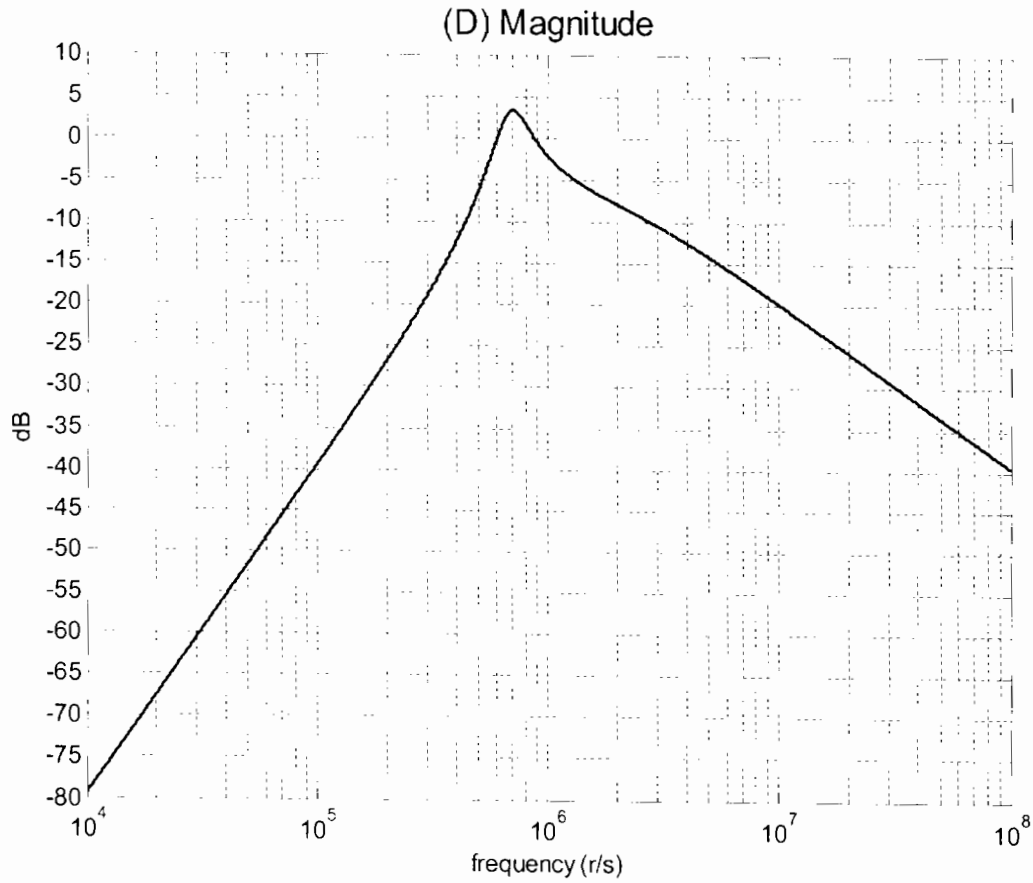


X not a high pass response

## Problem 4: Active Filters (20 points)

a) For the circuit below, derive the transfer function $H(s) = \frac{v_0}{v_{in}}$ (15 points)

H(s)= $\dfrac{(R_2 C_2 s)^2 + 1}{(R_2 C_2 s + 1)^2}$

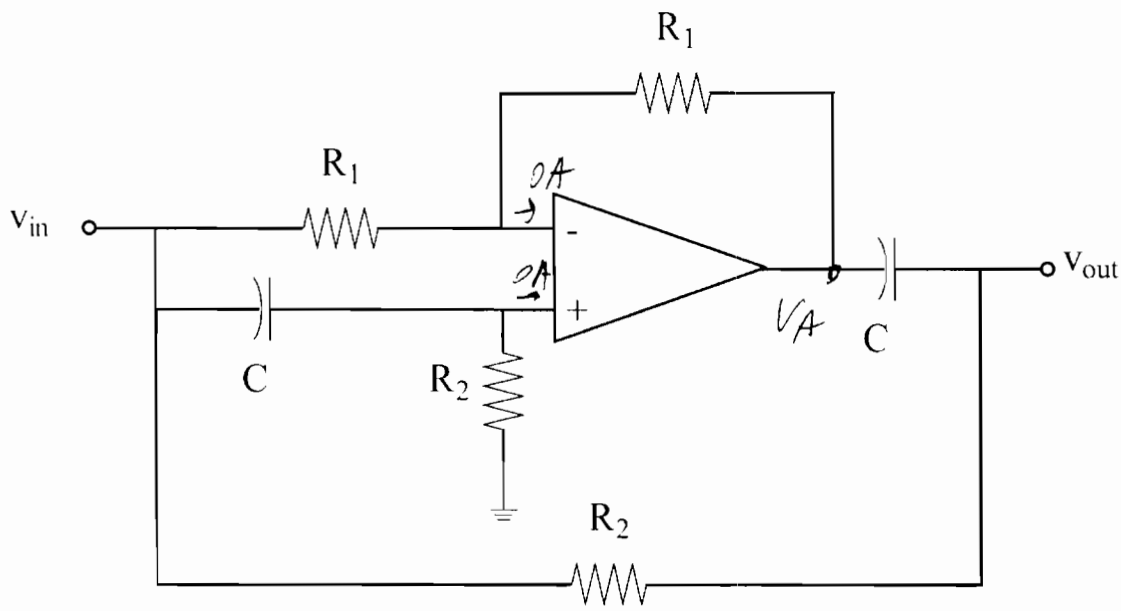


$$V_p = \frac{R_2}{\frac{1}{Cs} + R_2} V_{in} = \frac{R_2 Cs}{R_2 Cs + 1} V_{in}$$

$V_n = V_p$ Golden Rules

$$\frac{V_{in} - V_n}{R_1} = \frac{V_n - V_A}{R_1}$$ KCL at neg input

$$\Rightarrow V_A = 2V_n - V_{in} = 2V_p - V_{in}$$

Workspace for 4(a)

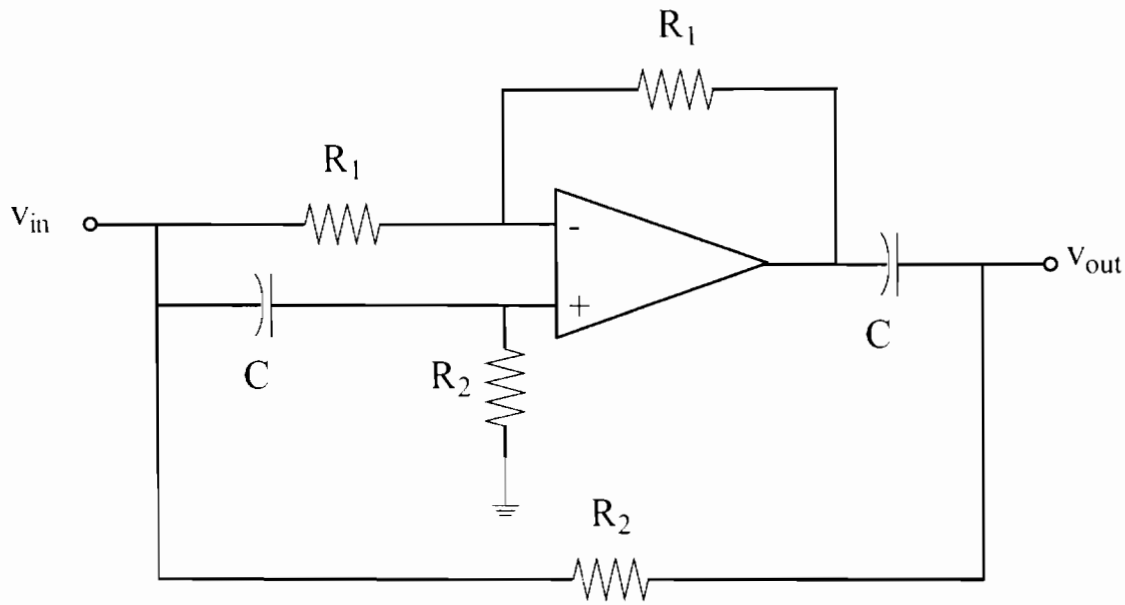


$$V_A = 2V_p - V_{in} = \left[\frac{2R_2C_2s}{R_2C_2s+1} - 1\right]V_{in}$$

$$= \left(\frac{R_2C_2s-1}{R_2C_2s+1}\right)V_{in}$$

$$(V_{out} - V_A)Cs + \frac{(V_{out} - V_{in})}{R_2} = 0 \quad \text{KCL}$$

$$V_{out}(1 + R_2Cs) = V_{in} + V_A R_2 C_2 s$$

$$= V_{in}\left[\frac{(R_2C_2s-1)(R_2C_2s)}{R_2C_2s+1} + 1\right]$$

$$= V_{in}\left[\frac{(R_2C_2s)^2 - R_2C_2s + R_2C_2s + 1}{R_2C_2s +}\right]$$

Additional Workspace for 4(a)

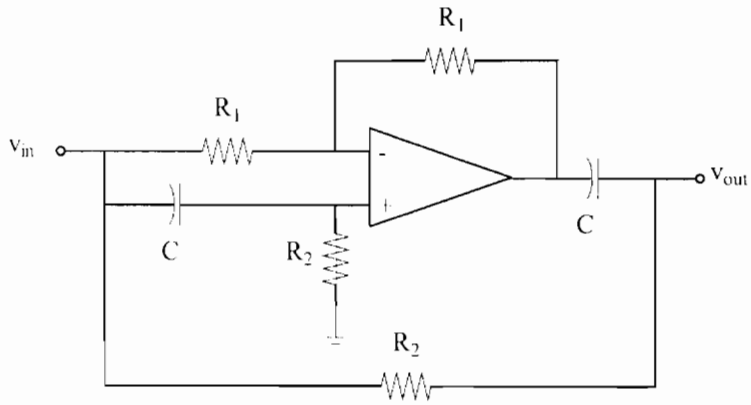


So

$$V_{out} = V_{in} \underbrace{\frac{(R_2 C_2 s)^2 + 1}{(R_2 C_2 s + 1)^2}}_{H(s)}$$

b) Either from your transfer function and/or circuit analysis, what type of filter is this)? (5 points)

Filter type is (circle only one):

Low-Pass High-Pass

Band-Pass Band-Stop/Band-Reject/Notch

No credit without a clear, concise, correct set of reasons in your work.

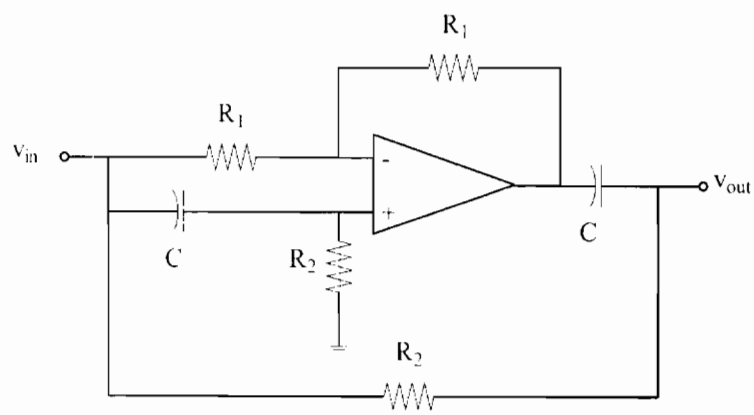


$$H(\omega) = \frac{(R_1 C_2 j\omega)^2 + 1}{(R_2 C_2 j\omega + 1)^2}$$

$$= \frac{1 - (R_1 C_2 \omega)^2}{(R_2 C_2 j\omega + 1)^2}$$

$$H\left(\frac{1}{R_2 C_2}\right) = 0$$

$$H(0) = 1$$

$$H(\infty) = \frac{-(R_2 C_2 \omega)^2}{-(R_1 C_2 \omega)^2} = 1$$

Bandstop/ Notch