# EECS 215 Winter Semester 2010 Midterm Exam I

Name (last, first): Solutions

Lecture Section Terry Guo

Rules:

1. Friday, February 19, 2010, 9:00 to 10:30 AM nominal exam time.
   **DO NOT DISCUSS THIS EXAM WITH ANYONE PRIOR UNTIL RECEIVING CTOOLS Announcement!!**
2. Closed Book, etc.
3. 1 Page (8.5"x11", double sided) of notes allowed
4. Calculators Needed and Allowed. No devices with full alphanumeric keyboards are permitted.
5. **Exam is given under the College of Engineering Honor Code principles and practices.**
6. **No communications of any kind are allowed. Use of cell phones, cameras, personal data assistants, computers, or any other electronic devices, besides approved calculators, will be treated as an Honor Code violation.**
7. Work to be done in Exam booklet. Turn in all pages of the exam.
   Do not unstaple the pages.
8. DO NOT WRITE ON THE BACK OF PAGES.
   Work on backs of pages will NOT be graded.
9. Show your work and *briefly* explain major steps to maximize partial credit.
   (for example: i3=i1+i2, node A, KCL).
   **NO CREDIT WILL BE GIVEN IF NO WORK IS SHOWN.**
10. *WRITE YOUR FINAL ANSWERS IN THE AREAS PROVIDED*

This Exam Contains

**4 problems over 19 pages** (including ample workspace).

**Sign the College of Engineering Honor Code Below.**
**(NO credit will be given for the exam without a signed pledge):**

***I have neither given nor received aid on this examination.***

**Signed:** _____

Do not write below this line

**********

Problem 1 [a b ] Problem 2 [a b ]

Problem 3 [a b c ] Problem 4 [ ]

## Problem 1: Node Analysis (30 points)

a) For the circuit below, carefully write down the full set of 5 linear equations that you would need to solve for the 3 unknown node voltages ($V_1$-$V_3$) and the two unknown dependent source variables $i_a$ and $i_s$. Label them with the major principle that they are based on (KVL, KCL). Do not yet solve these equations. (25 points)

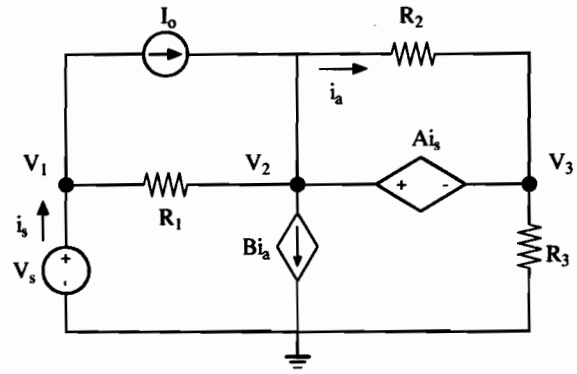


order doesn't matter

1) $V_1 = V_s$ KVL

2) $V_2 - V_3 = A\, i_s$ KVL

3) $i_s = (V_s - V_2)/R_1 + I_o$ KCL + Ohm's Law

4) $i_a = (V_2 - V_3)/R_2$ KVL / Ohm's Law

5) $-I_o + (V_2 - V_s)/R_1 + Bi_a + V_3/R_3 = 0$

KCL (S, N1)

Workspace for 1a)

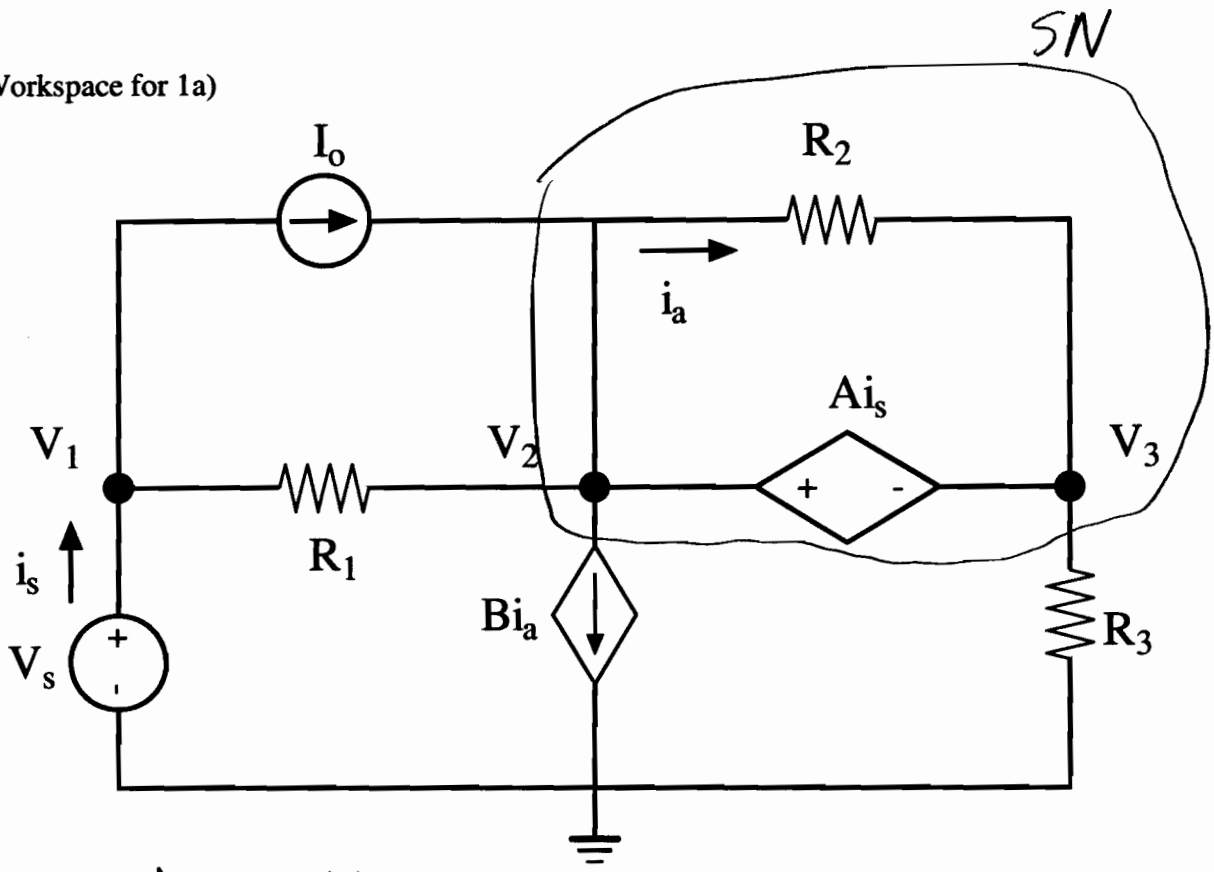


Identify S.N.

$V_2 - V_3 = Ai_s$ due to voltage source

Hence ②–③ form super node + $R_2$ is included since it connects ② & ③

Easy ones

① $V_1 = V_s$ by KVL (attached to V-source with one end at Grnd)

② $V_2 - V_3 = Ai_s$ KVL

③ $i_s = I_o + (V_s - V_2)/R_1$ by KCL at node ①

④ $i_a = (V_2 - V_3)/R_2$ KVL/Ohm's Law

Additional Workspace for 1a)

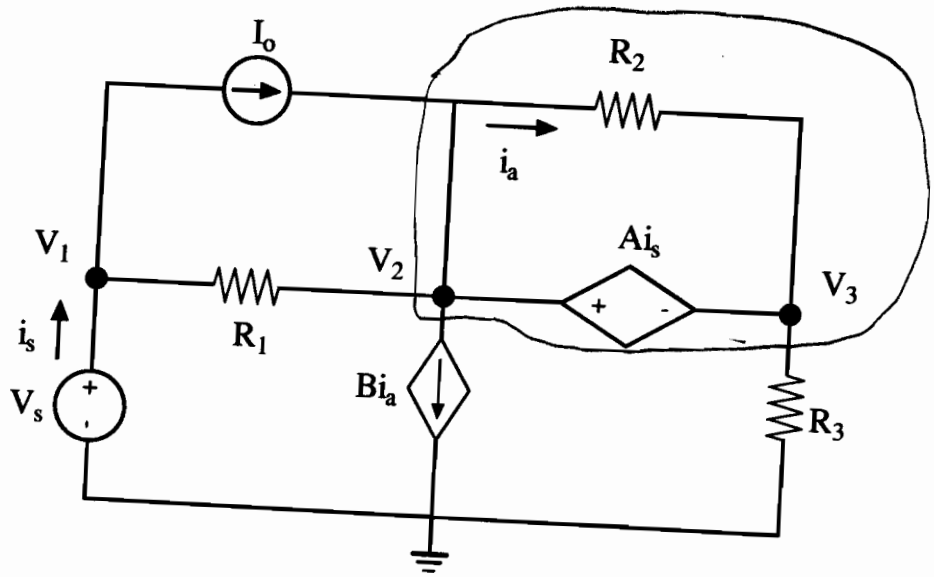


S.N. KCL (Leaving Node)

(5) $-I_o + (V_2 - V_s)/R_1 + Bi_a + V_3/R_3 = 0$

---

Not Required for (a), but I will condense equations

combine (2) & (3)

$$V_2 - V_3 = Ai_s = A\left[\frac{V_s - V_2}{R_1} + I_o\right]$$

or $\boxed{V_2\left[1 + \frac{A}{R_1}\right] + V_3(-1) = I_o + \frac{A}{R_1}V_s}$ $\boxed{E1}$

Combine (4) & (5) $i_a \rightarrow$ SN KCL

$$V_2\left(\frac{1}{R_1}\right) + (V_2 - V_3)\frac{B}{R_2} + V_3\left(\frac{1}{R_3}\right) = I_o + \frac{V_s}{R_1}$$

$\boxed{V_2\left(\frac{1}{R_1} + \frac{B}{R_2}\right) + V_3\left(\frac{1}{R_3} - \frac{B}{R_2}\right) = I_o + \frac{V_s}{R_1}}$ $\boxed{E2}$

2 Eqn, 2 unknowns

b) Solve your equations for the case of:
$V_S = 5V \quad I_o = 2mA \quad R_1 = 2K\Omega \quad R_2 = 5K\Omega \quad R_3 = 10K\Omega \quad A = 2.5K\Omega \quad B = 2$
(5 points)

$V_1 =$ +5 V

$V_2 =$ +5 V

$V_3 =$ 0 V

$V_1 = 5$ (trivial)

E1 + E2 plugging in #'s become

$V_2 (2.25) - V_3 = 11.25V$ $\boxed{E1}$

$V_2 (9 \times 10^{-4} \Omega^{-1}) + V_3 (-3 \times 10^{-4} \Omega^{-1}) = 4.5 \text{ mA}$ $\boxed{E2}$

$\rightarrow V_2 (3) - V_3 = 15V$ $\boxed{E2A}$ (Dividing through by $3 \times 10^{-4} \Omega^{-1}$)

subtracting E2A - E1 yields

$V_2 (0.75) = 3.75V$

$\Rightarrow V_2 = +5V$

Plugging back into E2A

$\Rightarrow V_3 = 0V$

## Problem 2: Mesh Analysis – (30 Points)

a) For the circuit below, write down, but do not solve (here) the full set of 6 linear equations that you need to solve for the mesh loop currents ($i_1$-$i_4$) and the ) and the two unknown dependent source variables $i_a$ and $i_s$. Label them with the major principle that they are based on (KVL, KCL). Do not yet solve these equations. (25 points)

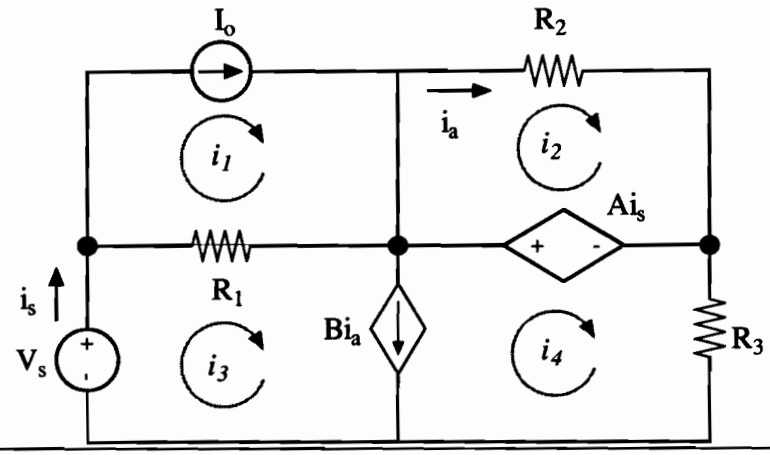


order doesn't matter

1) $i_1 = I_o$ KCL

2) $i_a = i_2$ KCL

3) $R_1(i_3 - i_1) + Ai_s + R_3 i_4 = V_s$ (S.M.) KCL

4) $Bi_a = i_3 - i_4$ KCL

5) $i_s = i_3$ KCL

6) $i_2 R_2 - Ai_s = 0$ KVL

Workspace for 2(a)

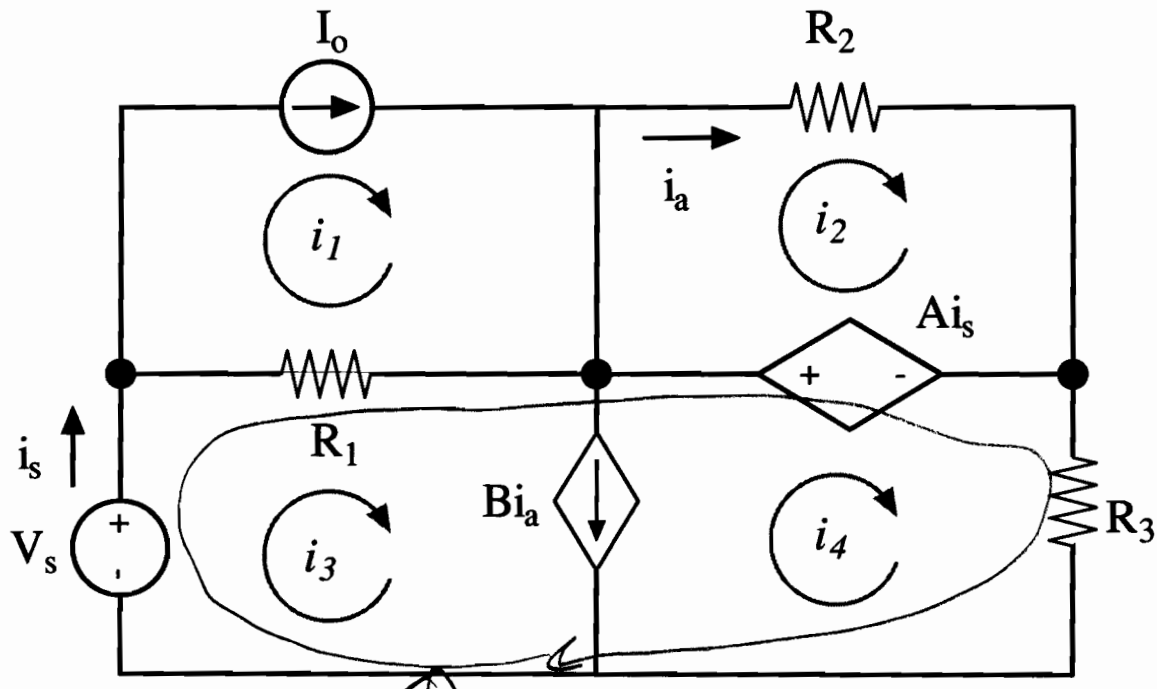


Super Mesh (current source on boundary)

Easy ones

[#'ing of Eqns comes from my rough solns]

① $i_1 = I_o$ KCL

② $i_a = i_2$ KCL

⑤ $i_s = i_3$ KCL

④ $Bi_a = i_3 - i_4$ KCL boundary current source

③ $R_1(i_3 - i_1) + Ai_s + R_3 i_4 = V_s$ S.M, KVL

⑥ $i_2 R_2 - Ai_s = 0$ Loop 4 KVL

---

Again not required, but I'll reduce

② + ④ → $Bi_2 = i_3 - i_4$ (A1)

Additional Workspace for 2(a)

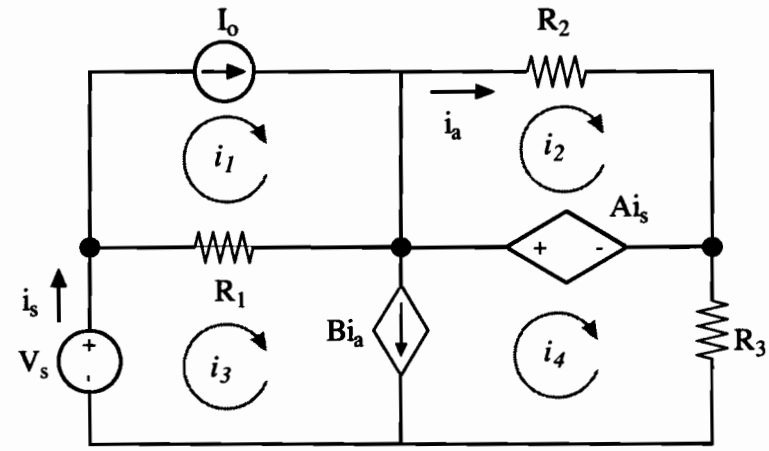


① &

⑤ & ③ →

$$R_1(i_3 - I_o) + A i_3 + R_3 i_4 = V_s$$

$$(R_1 + A) i_3 + (R_3) i_4 = (V_s + R_1 I_o) \quad (A2)$$

⑤ & ⑥ → $i_2 R_2 - A i_3 = 0$ (A3)

$$\Rightarrow i_3 = i_2 \left(\frac{R_2}{A}\right) \quad (A4)$$

(A1) $\Rightarrow$ $i_4 = i_3 - B i_2$

$$= i_2 \left[\frac{R_2}{A} - B\right] \quad (A5) \text{ (from above)}$$

Thus

$$(R_1 + A)\left(\frac{R_2}{A}\right) i_2 + R_3 \left[\frac{R_2}{A} - B\right] i_2 = (V_s + R_1 I_o) \quad (A6)$$

Thus we can get $i_2$

b) Solve for the mesh currents using the same component values as 1(b).
$V_S = 5V \quad I_o = 2mA \quad R_1 = 2K\Omega \quad R_2 = 5K\Omega \quad R_3 = 10K\Omega \quad A = 2.5K\Omega \quad B = 2$
(5 points)

Using my extra work in (a) + plugging in #'s

A6 $\quad i_2(9K\Omega) + (1K\Omega)(2-2)i_2 = 9V$

$$\Rightarrow \boxed{i_2 = +1mA}$$

Plugging into A4

$$\boxed{i_3 = +2mA}$$

and A5

$$\boxed{i_4 = 0mA}$$

obviously matrix methods work too.

Not Required

**Additional workspace for 2(b)**

Note that 1b & 2b agree as they must

$$i_2 = i_a = \frac{V_2 - V_3}{R_2} = \frac{5V}{5k\Omega} = +1\,mA \checkmark$$

$$i_4 = \frac{V_3}{R_3} = 0\,mA \checkmark$$

$$i_3 - i_1 = \frac{V_5 - V_2}{R_1} = 0$$

$$\Rightarrow i_3 = i_1 = I_0 = 2\,mA \checkmark$$

## Problem 3: Bipolar Junction Transistors and Maximum Power Transfer (25 points)

Suppose we have a common collector npn bipolar junction transistor amplifier as illustrated below:

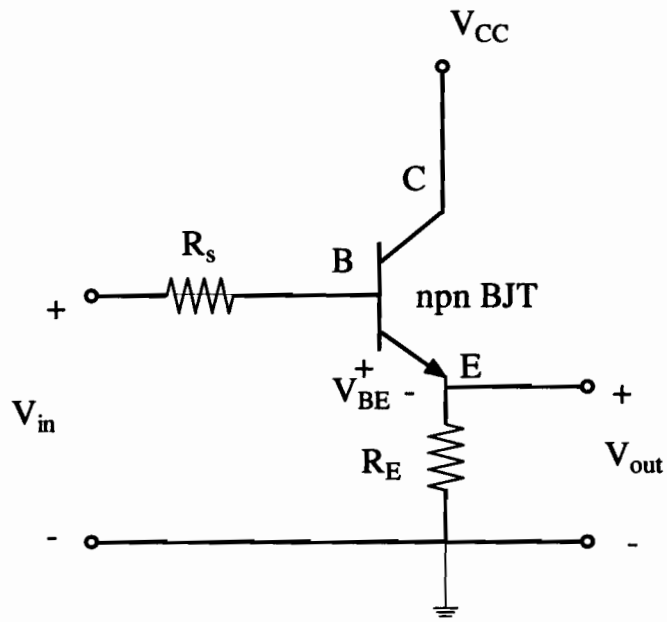


For this problem we will use the following:

$V_{in} \geq 0.7V \quad R_S = R_E = 1K\Omega \quad \beta_F = 100 \quad V_{cc} = +12V$

We will use the following model for the npn BJT if $V_{in} \geq 0.7$ *and* $V_{CE} \geq 0$ (forward active mode)

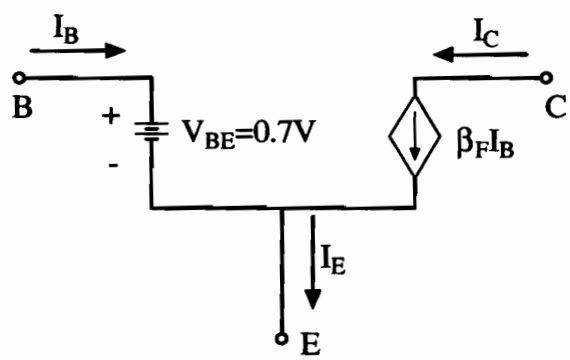


a) Find the voltage gain $G=V_{out}/V_{in}$ when the circuit is running in forward active mode and no load is present at the output terminals. (10 points)

$G=V_{out}/V_{in}=$ 0.9902

Very similar to PS#1, U+M p3.77

**Workspace for 3(a)**

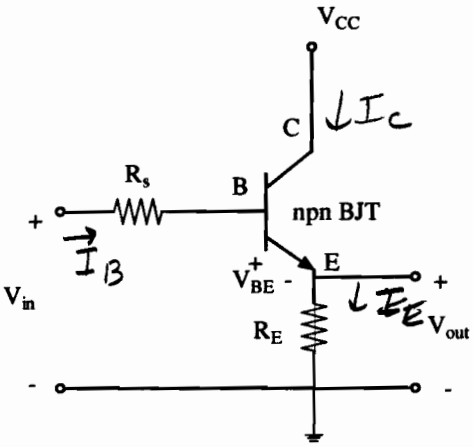


Model

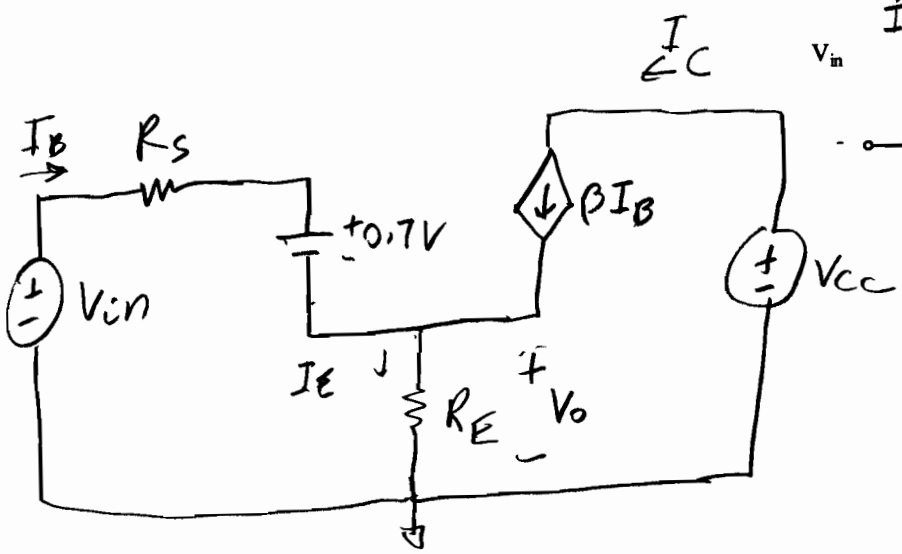


KCL: $I_E = I_B + I_C = (\beta+1) I_B$

KVL: $V_{in} = I_B R_S + 0.7V + I_E R_E$

$= I_B R_S + (\beta+1) R_E I_B + 0.7V$

$= I_B [R_S + (\beta+1) R_E] + 0.7V$

So $$I_B = \frac{(V_{in} - 0.7V)}{R_S + (\beta+1) R_E}$$

$$V_o = I_E R_E = (\beta+1) I_B R_E$$

Additional workspace for 3(a)

$$V_o = \left[\frac{(\beta+1)R_E}{R_S + (\beta+1)R_E}\right](V_{in} - 0.7V)$$

So

$$G = \frac{\partial V_o}{\partial V_{in}} = \frac{(\beta+1)R_E}{R_S + (\beta+1)R_E}$$

$$= \frac{101}{102} \simeq 0.9902$$

b) If there is no load at the output, what is the effective input resistance that the input ($V_{in}$) source sees? (5 points)

$R_{in,eff}$= 102 K Ω

From (a)

$$V_{in} = I_B [R_S + (\beta+1)R_E] + 0.7V$$

$$R_{in,eff} = \frac{\partial V_{in}}{\partial I_B} = R_S + (\beta+1)R_E = 102 K\Omega$$

Full credit given if you did not remove the 0.7V effect (ie $R_{in,eff} \simeq \frac{V_{in}}{I_B}$)

c) Now a load resistor is added ($R_L$) as shown below. Find the value of $R_L$ that results in maximum load power and what is that power assuming that $V_{in}$=6V? Also, how much power is supplied by the $V_{in}$ source?(10 points)

$V_{in} = 6V \quad R_S = R_E = 1K\Omega \quad \beta_F = 100 \quad V_{cc} = +12V$

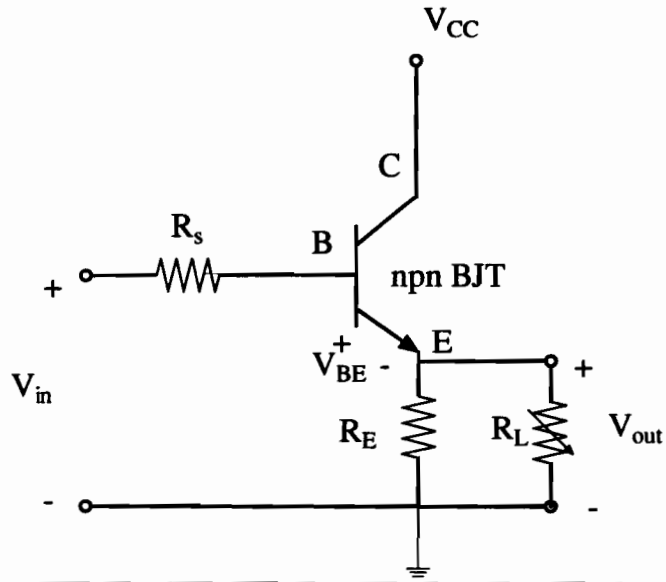


$R_L$= 9.804 Ω

$P_L$= 0.7023 W

$P_{Vin}$= 16.06 mW

Key is that we need $R_{TH}$ as seen between the emitter + ground (load terminals).
As per my hint, let's get $I_{SC} = I_N$
If we set $R_E = 0$, our work in (a) gives

$$I_E = I_{SC} = (\beta+1) I_{B,SC} = \frac{(\beta+1)}{R_S}(V_{in} - 0.7V)$$

Additional workspace for 3(c)

Since $V_{oc} = V_{TH} = \left[\frac{(\beta+1)R_E}{R_S + (\beta+1)R_E}\right](V_{in} - 0.7V)$

from (a), we have

$$R_{eq} = \frac{V_{oc}}{I_{sc}} = \frac{R_S R_E}{R_S + (\beta+1)R_E} = \frac{1K\Omega}{102}$$

$$\simeq 9{,}804\,\Omega$$

$$P_L = \frac{V_{TH}^2}{4R_{TH}} = \frac{V_{oc}^2}{4R_{eq}}$$

$$V_{oc} = \left(\frac{101}{102}\right)(V_{in} - 0.7V) \cong 5.248V$$

$$P_L \simeq 0.7023\,W$$

$$P_{Vin} = I_B V_{in}$$

What is $I_B$ now? Replace $R_E$ in work from (a) with $(R_E \| R_L) \simeq 9{,}709\,\Omega$

$$I_B = \frac{(V_{in} - 0.7V)}{R_S + (\beta+1)(R_E \| R_L)} \simeq 2.676\,mA$$

$$P_{Vin} = I_B(6V) \simeq 16.06\,mW$$

## Problem 4: Op-Amps (15 points)

Find the gain ($v_o/v_i$) of the circuit below.

$(v_o/v_i)$= $-3/8$

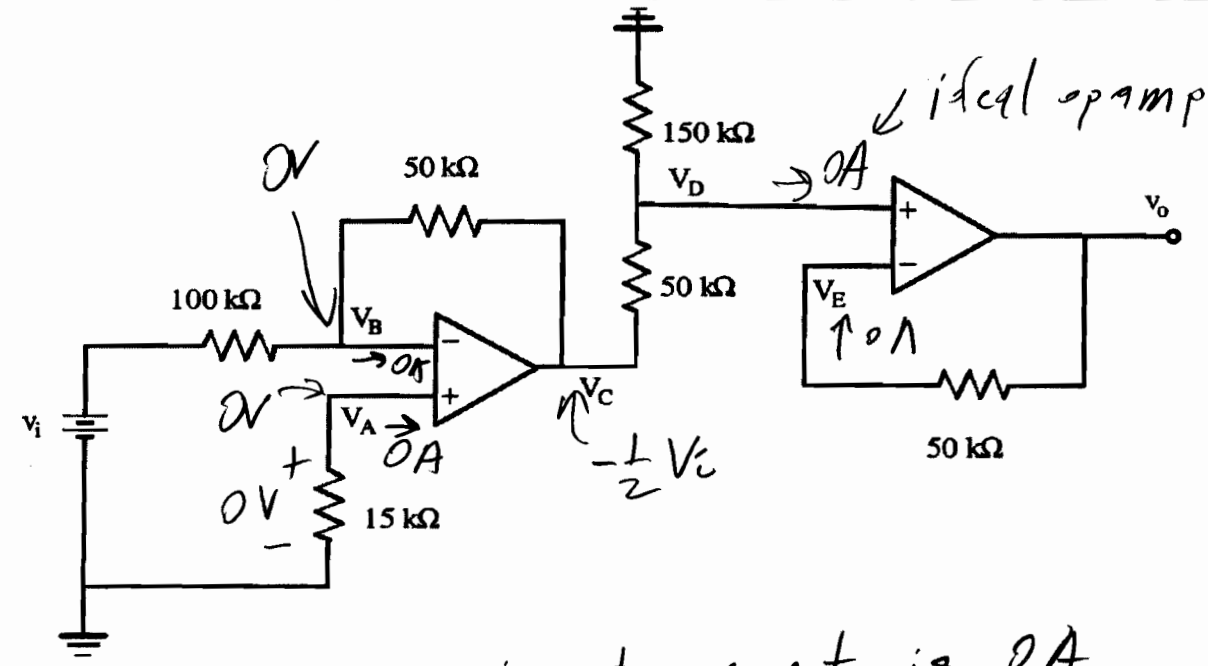


$V_A = 0V$ since input current is 0A

$\Rightarrow$ no V-drop across 15 kΩ resistor to ground

$\Rightarrow V_B = 0$ By ideal op-amp "golden rules"

so $V_C = -\frac{50k\Omega}{100k\Omega} V_i = -\frac{1}{2} V_i$

since this is effecting an inverting amp

$V_D = \left(\frac{150k\Omega}{50k\Omega + 150k\Omega}\right) V_C = \frac{3}{4} V_C = -\frac{3}{8} V_i$

voltage divider

Additional workspace for 4

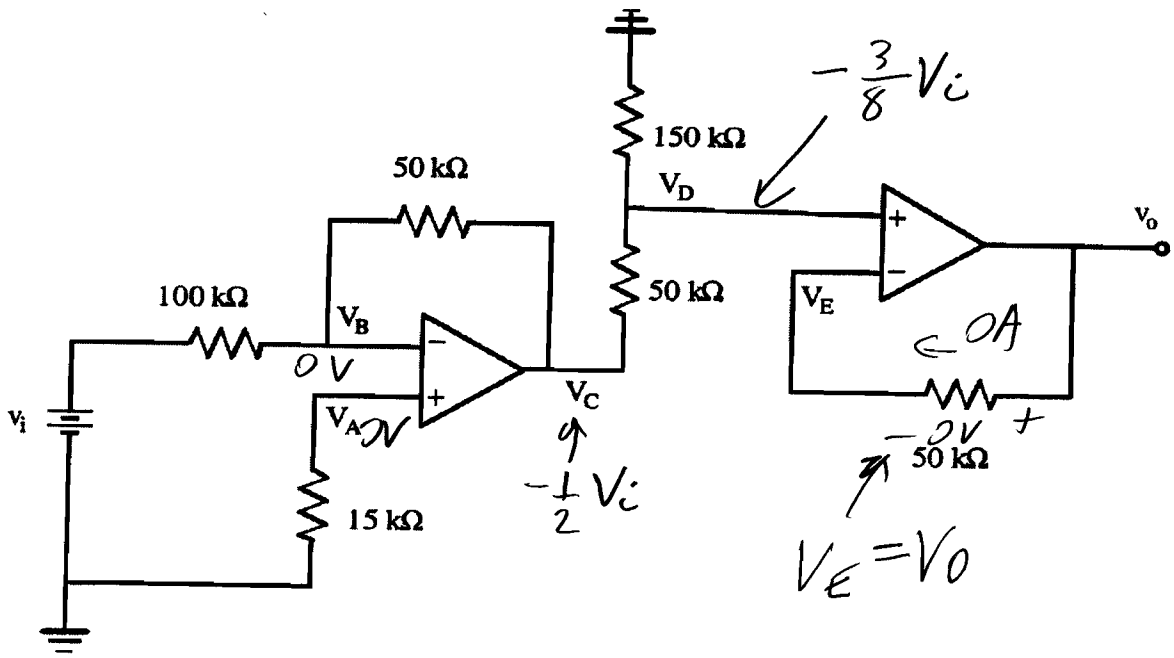


$$V_o = V_E = V_D = -\frac{3}{8}V_i$$