# EECS 215 Winter Semester 2010 Midterm Exam I

Name (last, first): _____

Lecture Section Terry Guo

Rules:

1. Friday, February 19, 2010, 9:00 to 10:30 AM nominal exam time.
   **DO NOT DISCUSS THIS EXAM WITH ANYONE PRIOR UNTIL RECEIVING CTOOLS Announcement!!**
2. Closed Book, etc.
3. 1 Page (8.5"x11", double sided) of notes allowed
4. Calculators Needed and Allowed. No devices with full alphanumeric keyboards are permitted.
5. **Exam is given under the College of Engineering Honor Code principles and practices.**
6. **No communications of any kind are allowed. Use of cell phones, cameras, personal data assistants, computers, or any other electronic devices, besides approved calculators, will be treated as an Honor Code violation.**
7. Work to be done in Exam booklet. Turn in all pages of the exam.
   Do not unstaple the pages.
8. DO NOT WRITE ON THE BACK OF PAGES.
   Work on backs of pages will NOT be graded.
9. Show your work and *briefly* explain major steps to maximize partial credit.
   (for example: i3=i1+i2, node A, KCL).
   **NO CREDIT WILL BE GIVEN IF NO WORK IS SHOWN.**
10. *WRITE YOUR FINAL ANSWERS IN THE AREAS PROVIDED*

This Exam Contains

**4 problems over 19 pages** (including ample workspace).

**Sign the College of Engineering Honor Code Below.**
**(NO credit will be given for the exam without a signed pledge):**

***I have neither given nor received aid on this examination.***

**Signed:_____**

Do not write below this line

**********

Problem 1 [a b ] Problem 2 [a b ]

Problem 3 [a b c ] Problem 4 [ ]

# Problem 1: Node Analysis (30 points)

a) For the circuit below, carefully write down the full set of 5 linear equations that you would need to solve for the 3 unknown node voltages ($V_1$-$V_3$) and the two unknown dependent source variables $i_a$ and $i_s$. Label them with the major principle that they are based on (KVL, KCL). Do not yet solve these equations. (25 points)

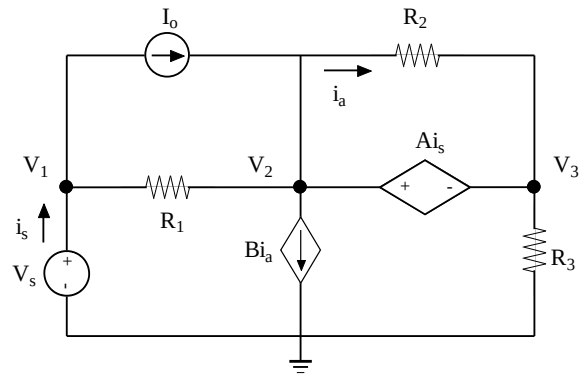


1) _____

_____

2) _____

_____

3) _____

_____

4) _____

_____

5) _____

_____

Workspace for 1a)

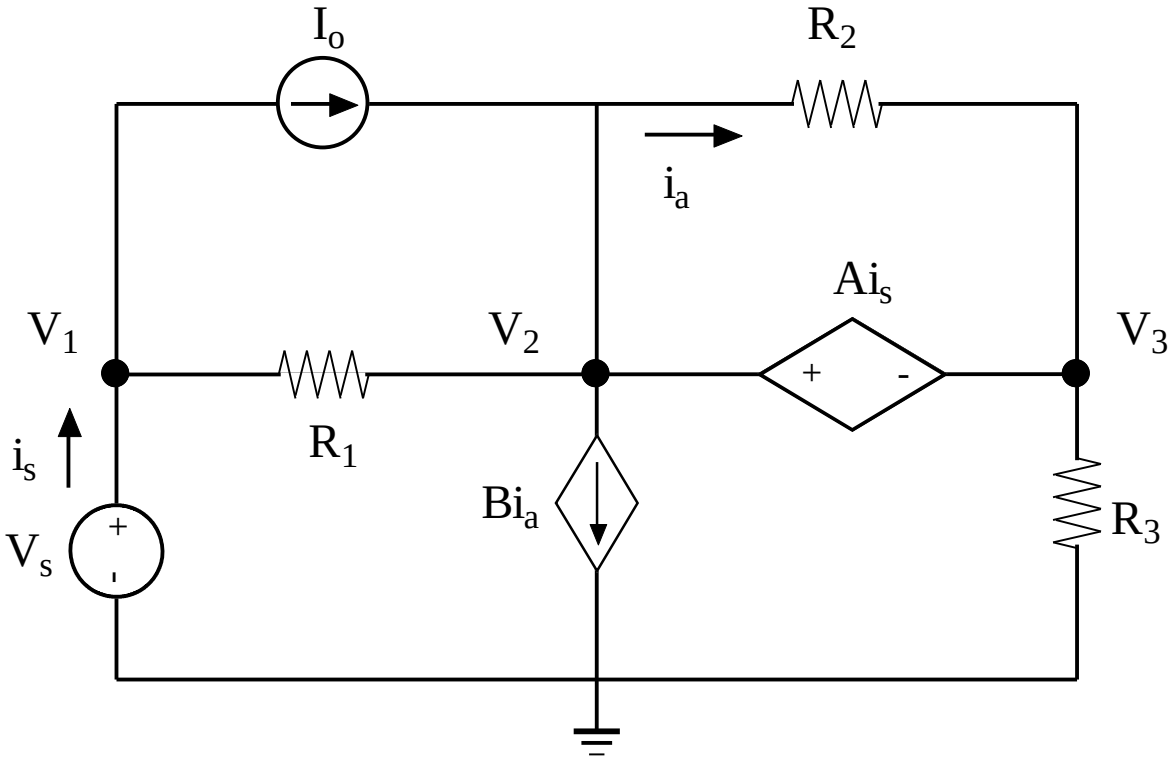

Additional Workspace for 1a)

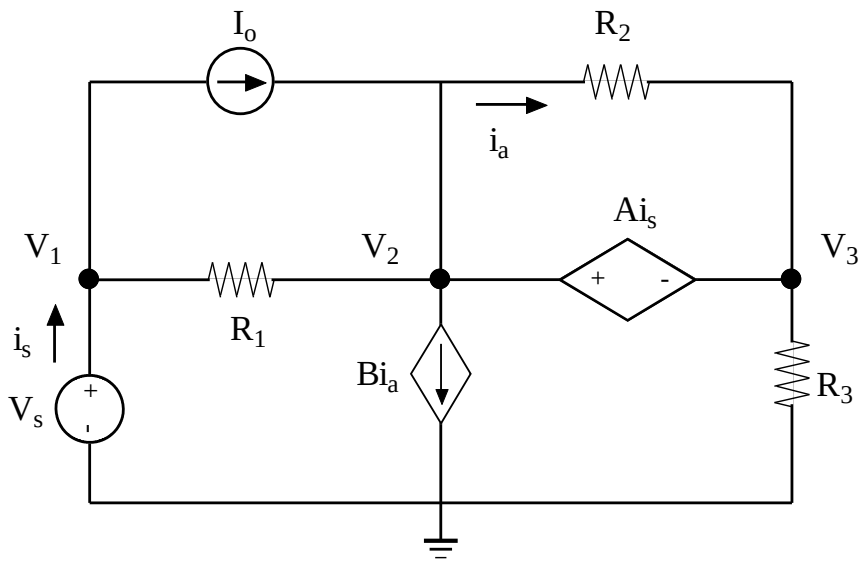

b) Solve your equations for the case of:
$V_S = 5V \quad I_o = 2mA \quad R_1 = 2K\Omega \quad R_2 = 5K\Omega \quad R_3 = 10K\Omega \quad A = 2.5K\Omega \quad B = 2$
(5 points)

$V_1$= _____ V

$V_2$= _____ V

$V_3$= _____ V

Additional workspace for 1(b)

# Problem 2: Mesh Analysis – (30 Points)

a) For the circuit below, write down, but do not solve (here) the full set of 6 linear equations that you need to solve for the mesh loop currents ($i_1$-$i_4$) and the ) and the two unknown dependent source variables $i_a$ and $i_s$. Label them with the major principle that they are based on (KVL, KCL). Do not yet solve these equations. (25 points)

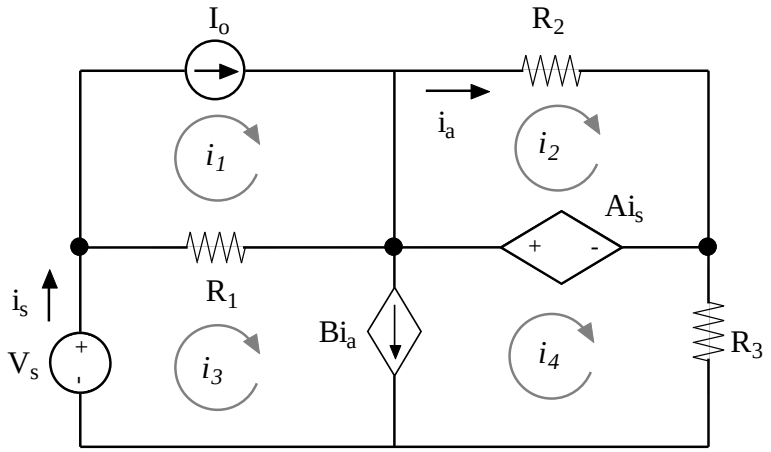


1) _____

_____

2) _____

_____

3) _____

_____

4) _____

_____

5) _____

_____

6) _____

_____

Workspace for 2(a)

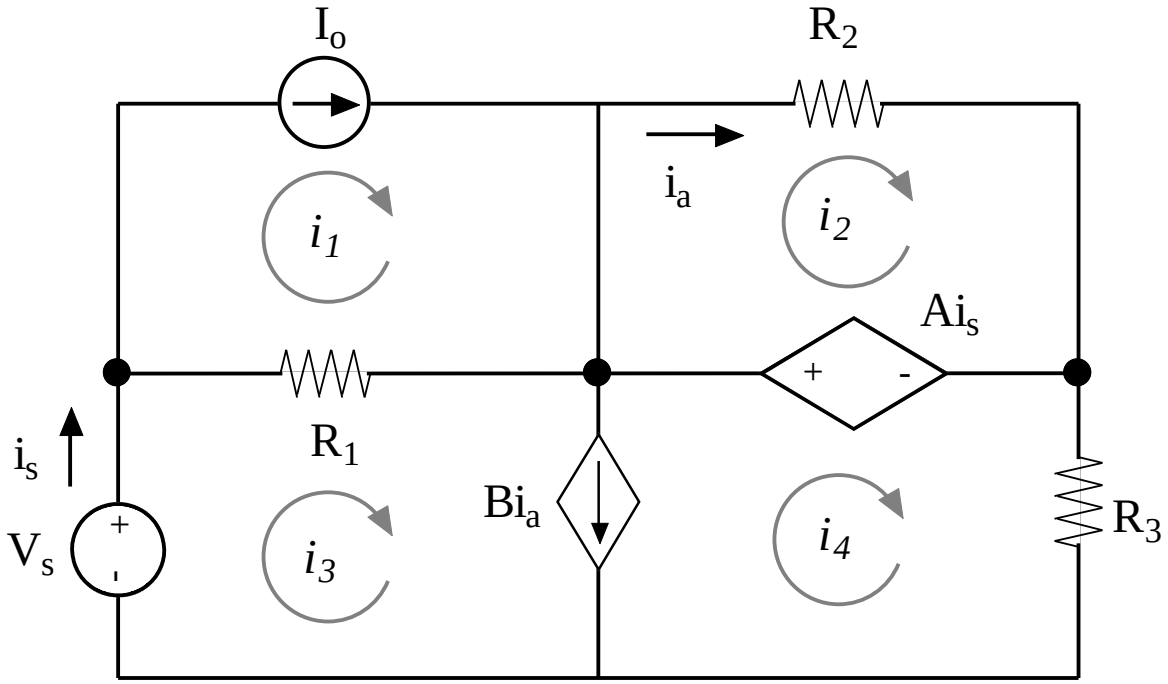

Additional Workspace for 2(a)

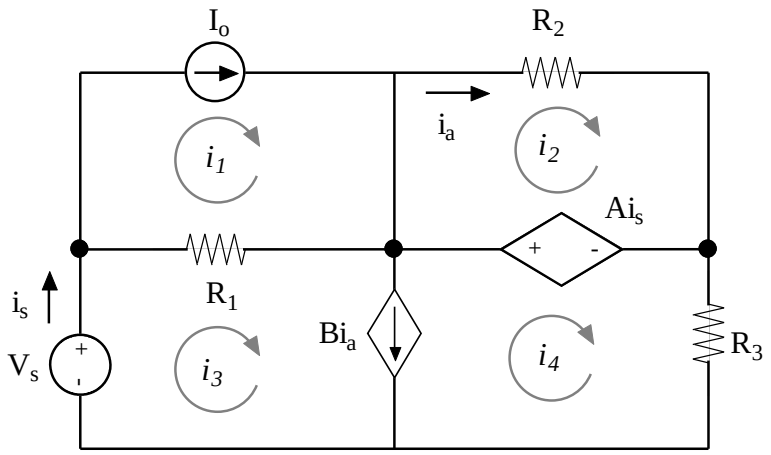

b) Solve for the mesh currents using the same component values as 1(b).
$V_S = 5V \quad I_o = 2mA \quad R_1 = 2K\Omega \quad R_2 = 5K\Omega \quad R_3 = 10K\Omega \quad A = 2.5K\Omega \quad B = 2$
(5 points)

Additional workspace for 2(b)

# Problem 3: Bipolar Junction Transistors and Maximum Power Transfer (25 points)

Suppose we have a common collector npn bipolar junction transistor amplifier as illustrated below:

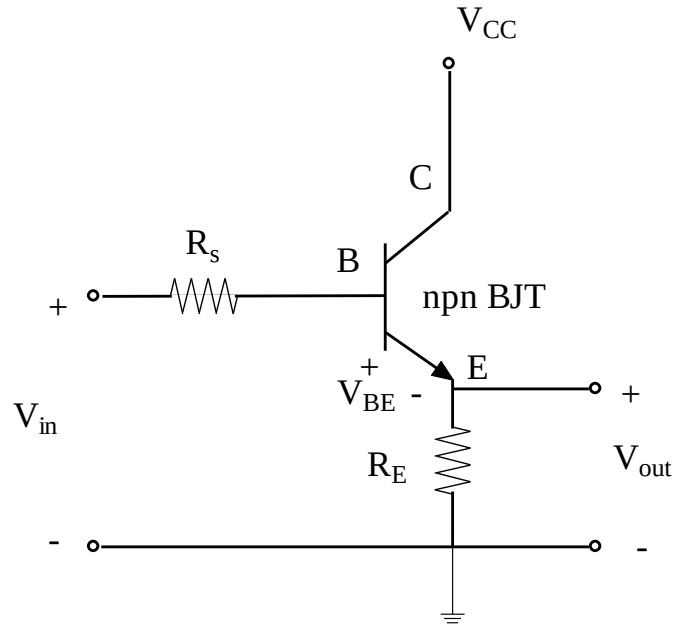


For this problem we will use the following:

$V_{in} \geq 0.7V \quad R_S = R_E = 1K\Omega \quad \beta_F = 100 \quad V_{cc} = +12V$

We will use the following model for the npn BJT if $V_{in} \geq 0.7 \;\; and \;\; V_{CE} \geq 0$ (forward active mode)

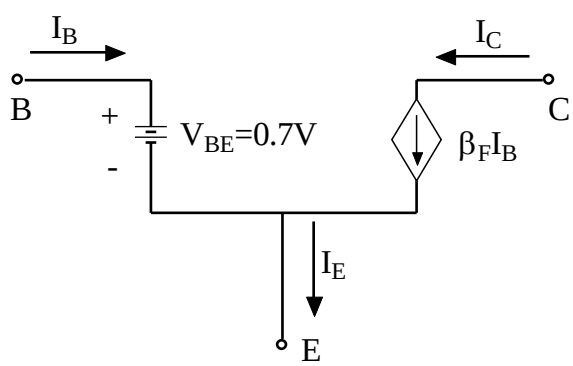


a) Find the voltage gain $G=V_{out}/V_{in}$ when the circuit is running in forward active mode and no load is present at the output terminals. (10 points)

$G=V_{out}/V_{in}=$_____

Workspace for 3(a)

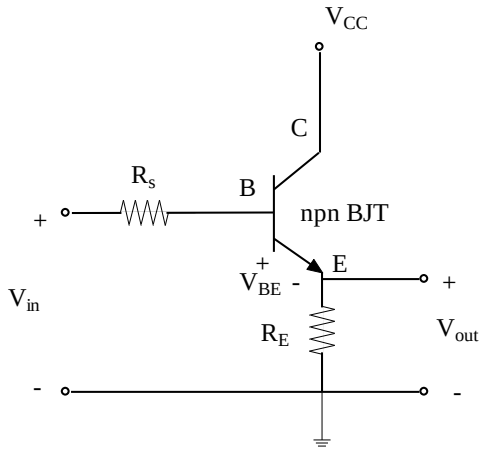

Additional workspace for 3(a)

b) If there is no load at the output, what is the effective input resistance that the input ($V_{in}$) source sees? (5 points)

$R_{in,eff}$=_____ Ω

c) Now a load resistor is added ($R_L$) as shown below. Find the value of $R_L$ that results in maximum load power and what is that power assuming that $V_{in}$=6V? Also, how much power is supplied by the $V_{in}$ source?(10 points)

$V_{in} = 6V \quad R_S = R_E = 1K\Omega \quad \beta_F = 100 \quad V_{cc} = +12V$

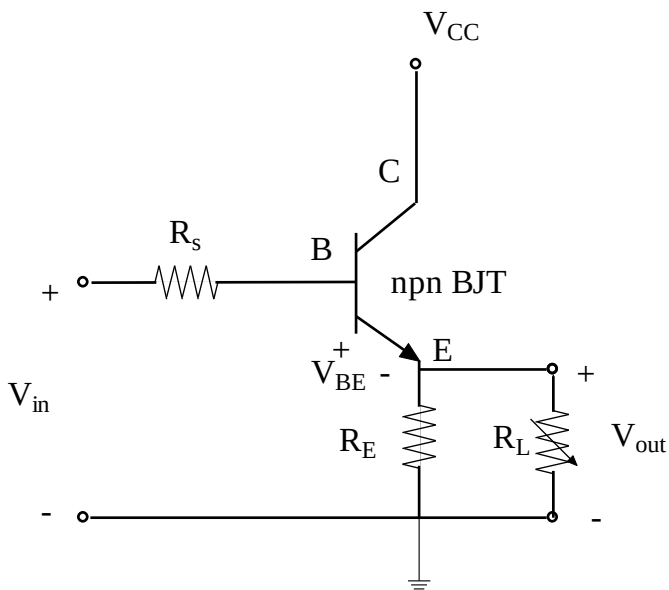


$R_L$=_____ Ω

$P_L$=_____ W

$P_{Vin}$=_____ W

Additional workspace for 3(c)

# Problem 4: Op-Amps (15 points)

Find the gain ($v_o/v_i$) of the circuit below.

($v_o/v_i$)=_____

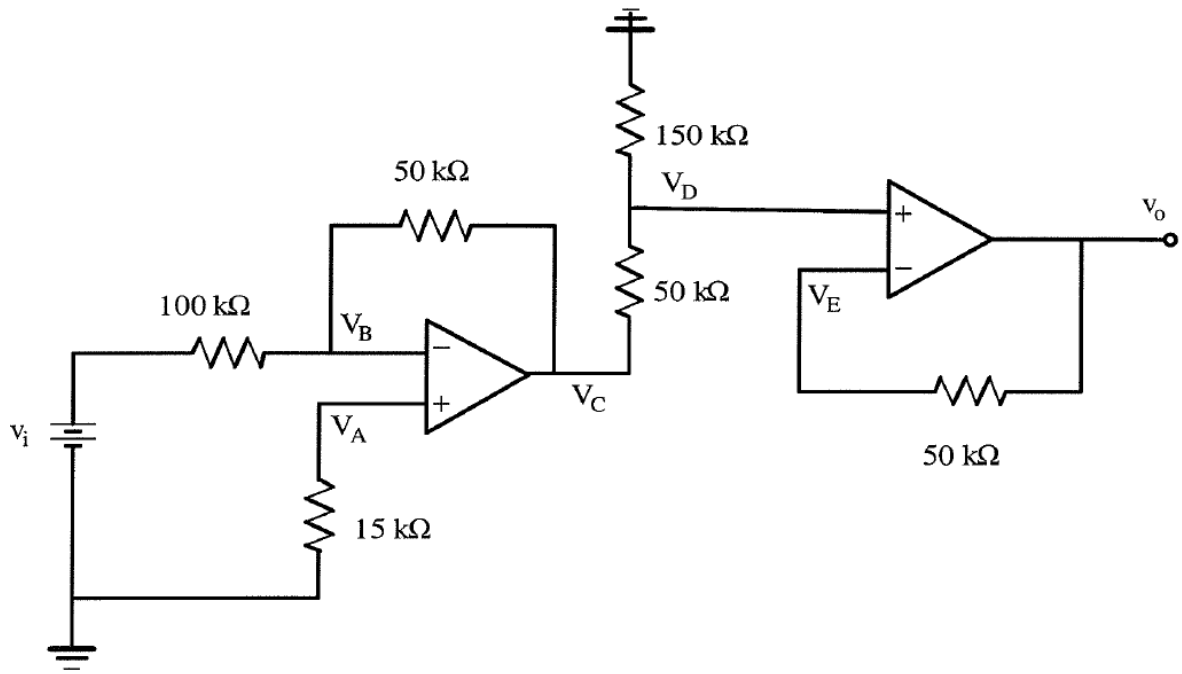
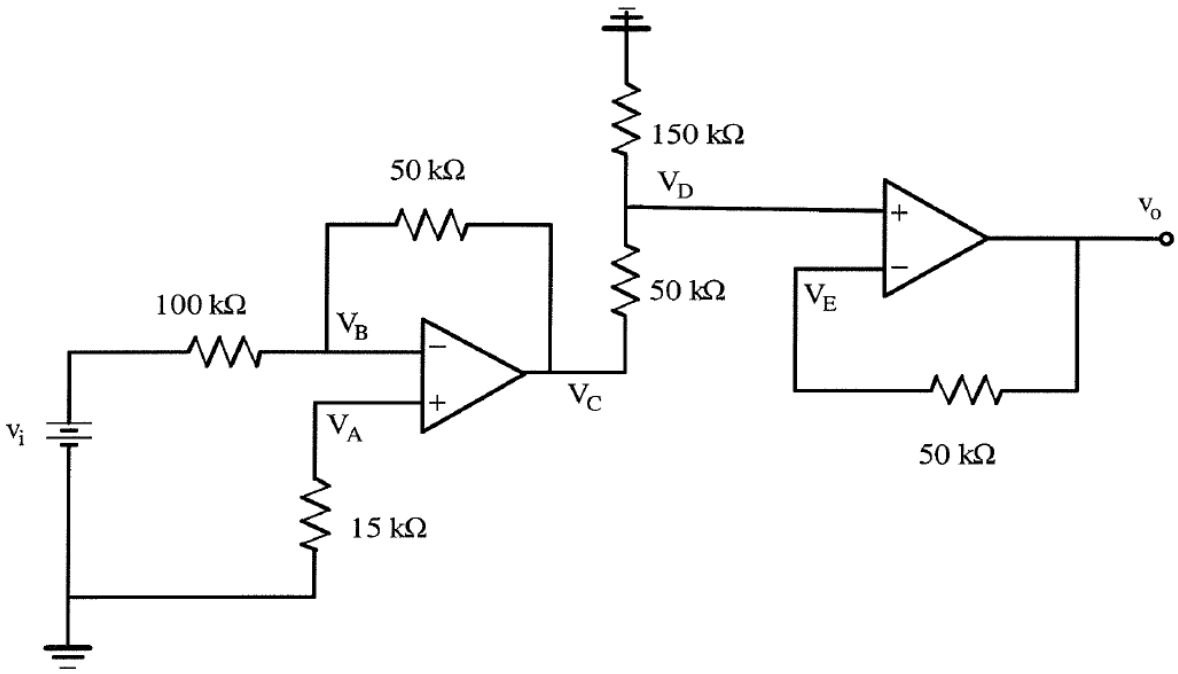
Additional workspace for 4