# EECS 215 Winter Semester 2010 Final Exam

Name (last, first): _____

Lecture Section Terry Guo

Rules:

1. Monday, April 26, 2010, 7:00 to 9:00 PM nominal exam time.
   **DO NOT DISCUSS THIS EXAM WITH ANYONE PRIOR UNTIL RECEIVING CTOOLS Announcement!!**
2. Closed Book, etc.
3. 3 Pages (8.5"x11", double sided) of notes allowed
4. Calculators Needed and Allowed. No devices with full alphanumeric keyboards are permitted.
5. **Exam is given under the College of Engineering Honor Code principles and practices.**
6. **No communications of any kind are allowed. Use of cell phones, cameras, personal data assistants, computers, or any other electronic devices, besides approved calculators, will be treated as an Honor Code violation.**
7. Work to be done in Exam booklet. Turn in all pages of the exam.
   Do not unstaple the pages. You may remove the last 3 pages (27-29, FOC, SOC, Bode note pages)
8. DO NOT WRITE ON THE BACK OF PAGES.
   Work on backs of pages will NOT be graded.
9. Show your work and *briefly* explain major steps to maximize partial credit.
   (for example: i3=i1+i2, node A, KCL).
   **NO CREDIT WILL BE GIVEN IF NO WORK IS SHOWN.**
10. *WRITE YOUR FINAL ANSWERS IN THE AREAS PROVIDED*

This Exam Contains

**4 problems over 29 pages** (including ample workspace).

**Sign the College of Engineering Honor Code Below.**
**(NO credit will be given for the exam without a signed pledge):**

***I have neither given nor received aid on this examination.***

**Signed:_____**

Do not write below this line

**********

Problem 1 [a b ] Problem 2 [a b c ]

Problem 3 [ ] Problem 4 [a b ]

# Problem 1: Transient Response (30 Points)

a) For the circuit below, find the general differential equation for $v_c(t)$. The equation should be expressed in terms of the symbolic parameters ($V_c, V_g, R_1, R_2, A, C, L$) and should not be based on the specific numbers given in part (b). $V_c(t)$ (and its derivatives) should be the <u>only</u> unknown in your final equation. You may use either time domain or s-domain methods. (Prof. Terry found the time-domain approach to be faster on this one, but either will work) (15 points)

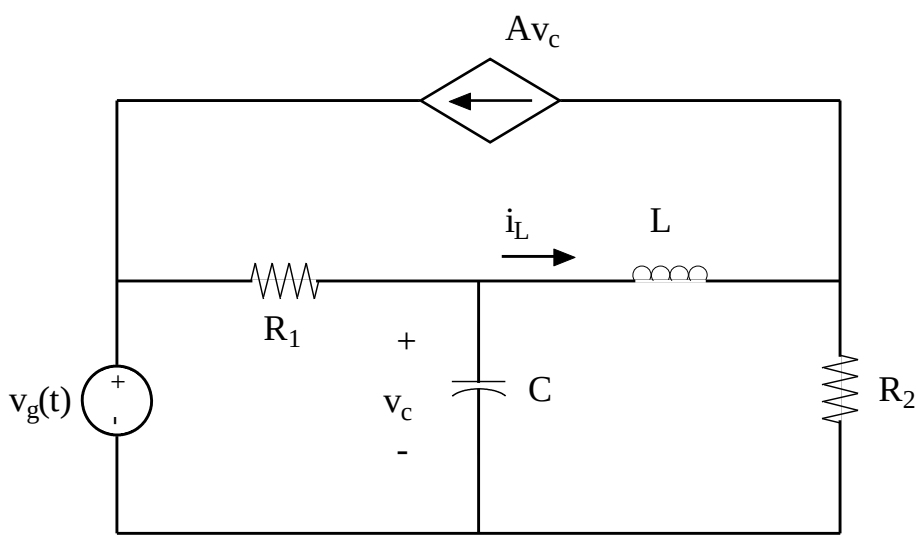

Workspace for 1 (a)

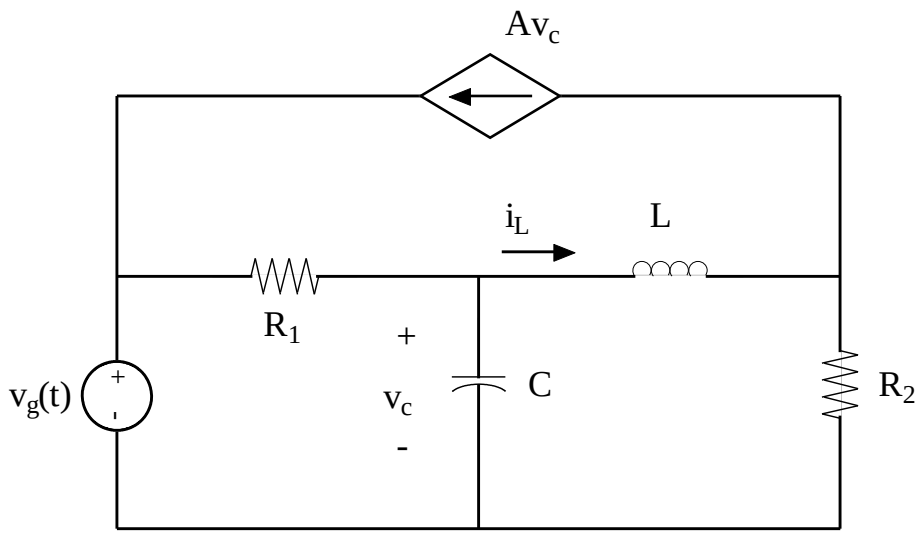

Additional Workspace for 1 (a)

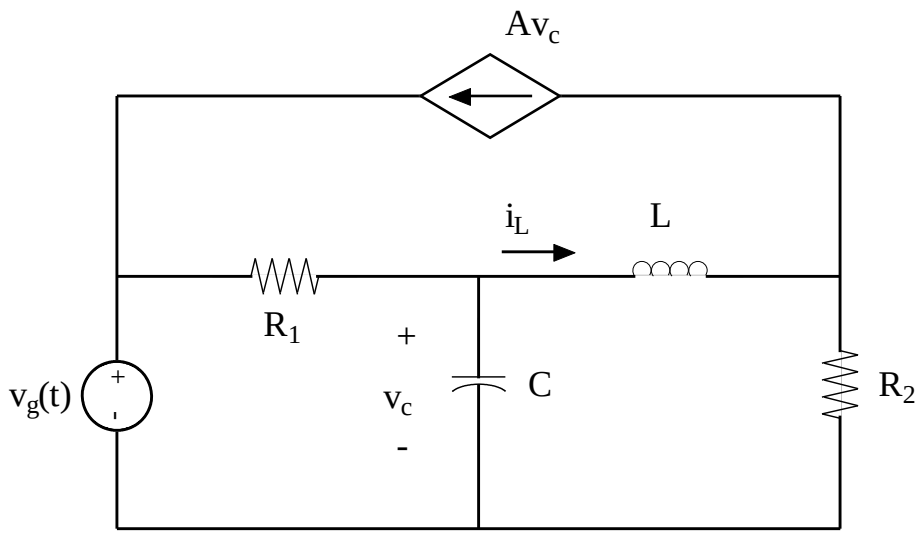

b) *<u>This problem can be done even if you did not complete part (a).</u>*
If we use the following component values, the resulting differential equation for t>0 is given below. Find $v_c(t)$ for t>0. (15 points)

$$v_g(t) = 1u(t)V \quad R_1 = R_2 = 1K\Omega \quad A = 7x10^{-3}\Omega^{-1} \quad C = 1nF \quad L = 1mH$$

$$\frac{d^2 v_c}{dt^2} + \left(2x10^6 s^{-1}\right)\frac{dv_c}{dt} + \left(9x10^{12} s^{-2}\right)v_c = \left(1x10^{12} V s^{-2}\right) \quad for\, t > 0$$

$V_c(t)$ = _____

_____

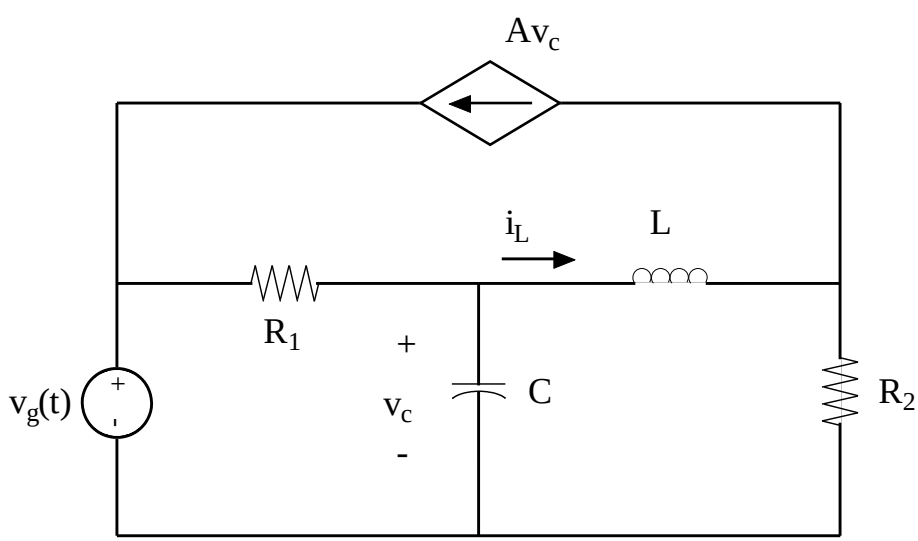

Workspace for 1(b)

$$v_g(t) = 1u(t)V \quad R_1 = R_2 = 1K\Omega \quad A = 7x10^{-3}\Omega^{-1} \quad C = 1nF \quad L = 1mH$$

$$\frac{d^2 v_c}{dt^2} + \left(2x10^6 s^{-1}\right)\frac{dv_c}{dt} + \left(9x10^{12} s^{-2}\right)v_c = \left(1x10^{12} V\square s^{-2}\right) \quad for\, t > 0$$

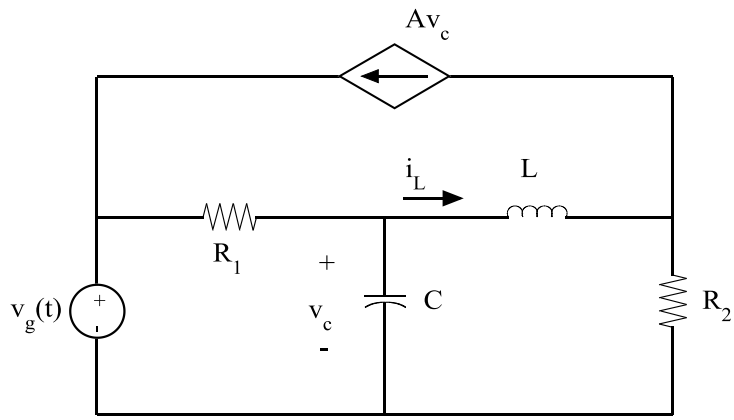

Additional Workspace for 1(b)

$$v_g(t) = 1u(t)V \quad R_1 = R_2 = 1K\Omega \quad A = 7x10^{-3}\Omega^{-1} \quad C = 1nF \quad L = 1mH$$

$$\frac{d^2 v_c}{dt^2} + \left(2x10^6 s^{-1}\right)\frac{dv_c}{dt} + \left(9x10^{12} s^{-2}\right)v_c = \left(1x10^{12} V\square s^{-2}\right) \quad for\, t > 0$$

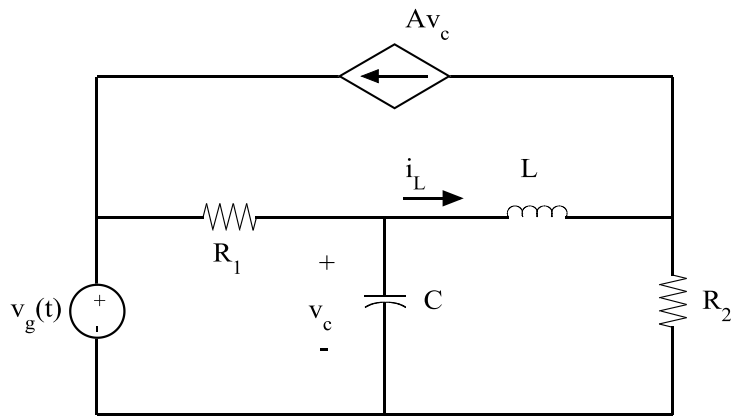

## Problem 2: AC Steady State & AC Power (35 Points)

For the circuit on the following page:

a) Write down a complete set of five phasor domain nodal analysis equations that you would need to find the phasors of the unknown node voltages $V_1$, $V_2$, $V_3$, $V_o$, and the controlling variable $i_c$. Indicate the major reason (KVL, KCL) for each equation. *You are not required to numerically solve these equations.* (15 points)

1) _____

_____

2) _____

_____

3) _____

_____

4) _____

_____

5) _____

_____

Circuit and workspace for 2(a)

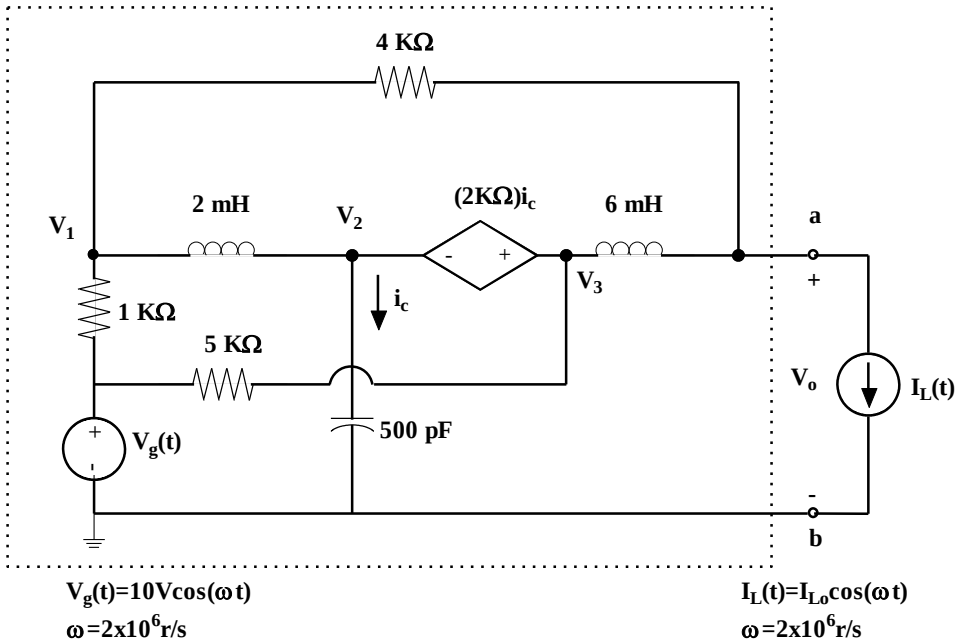


$V_g(t)=10V\cos(\omega t)$
$\omega=2x10^6 r/s$

$I_L(t)=I_{Lo}\cos(\omega t)$
$\omega=2x10^6 r/s$

Additional workspace for 2(a)

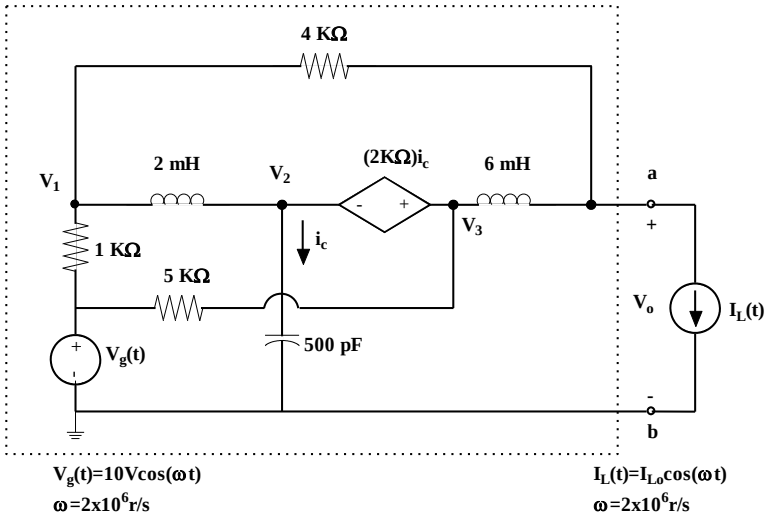

Additional workspace for 2(a)

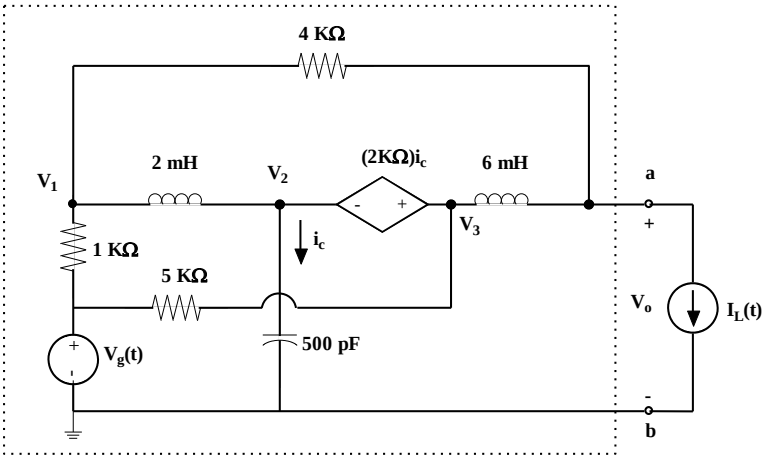


$V_g(t)=10V\cos(\omega t)$
$\omega=2x10^6$r/s

$I_L(t)=I_{Lo}\cos(\omega t)$
$\omega=2x10^6$r/s

*For (b) and (c) part, do not attempt to numerically solve (a)*. The following provides all the information you need: assume that the exact phasor domain result for part (a) is:

$$V_o = -\left[\left(\frac{5{,}642{,}000}{1{,}517} + \frac{2{,}439{,}000}{1{,}517}j\right)\Omega\right] I_{Lo} + \left(\frac{4{,}028}{7{,}585} + \frac{1{,}894}{7{,}585}j\right) 10V$$

b) For the circuit in the box (the dashed box), what is the open circuit output voltage $V_o(t)=V_{TH}(t)$ (the measurable, time domain response) and what is the short circuit or Norton current $I_N(t)$ (the measurable, time domain response)? What is the complex output impedance $Z_{eq}$ at $\omega=2x10^6$ r/s in a+jb format (10 points)

$V_{TH}(t)$=_____V

$I_N(t)$=_____A

$Z_{eq}$= _____+ j _____Ω

*For (b) and (c) part, do not attempt to numerically solve (a)*. The following provides all the information you need: assume that the exact phasor domain result for part (a) is:

$$V_o = -\left[\left(\frac{5{,}642{,}000}{1{,}517} + \frac{2{,}439{,}000}{1{,}517}\mathrm{j}\right)\Omega\right] I_{Lo} + \left(\frac{4{,}028}{7{,}585} + \frac{1{,}894}{7{,}585}\mathrm{j}\right) 10V$$

Additional workspace for 2(b)

*For (b) and (c) part, do not attempt to numerically solve (a)*. The following provides all the information you need: assume that the exact phasor domain result for part (a) is:

$$V_o = -\left[\left(\frac{5{,}642{,}000}{1{,}517} + \frac{2{,}439{,}000}{1{,}517}j\right)\Omega\right] I_{Lo} + \left(\frac{4{,}028}{7{,}585} + \frac{1{,}894}{7{,}585}j\right) 10V$$

c) If a *passive* load is connected at the output of the boxed circuit (as illustrated below), find the load impedance ($Z_L$) that results in maximum power transfer. What is the average dissipated power ($P_{AV}$)? If the load $Z_L$ is modeled as a resistor in series with either a capacitor or inductor, find the R and L or C required. (10 points)

$Z_L$= _____ + j _____ Ω

$P_{av}$= _____ W

$R_L$= _____ Ω

And either:

$L_L$= _____ H

or

$C_L$= _____ F

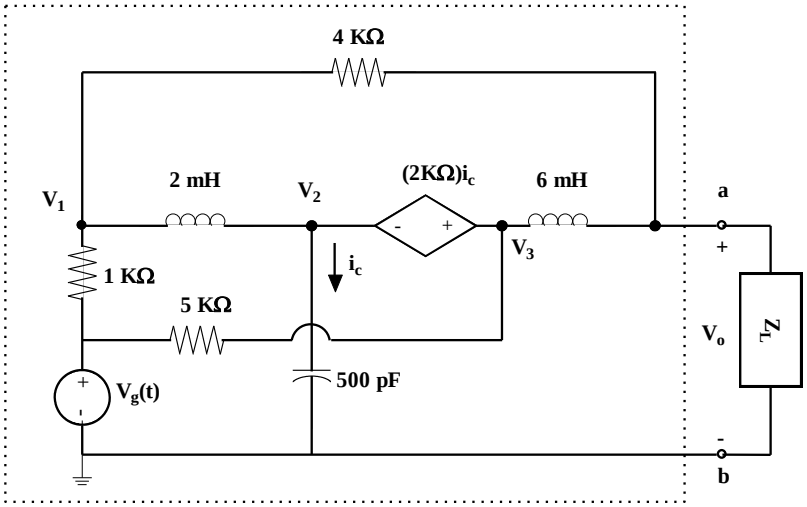


$V_g(t)=10V\cos(\omega t)$

$\omega=2x10^6 r/s$

Workspace for 2 (c)

*For (b) and (c) part, do not attempt to numerically solve (a)*. The following provides all the information you need: assume that the exact phasor domain result for part (a) is:

$$V_o = -\left[\left(\frac{5{,}642{,}000}{1{,}517} + \frac{2{,}439{,}000}{1{,}517}j\right)\Omega\right] I_{Lo} + \left(\frac{4{,}028}{7{,}585} + \frac{1{,}894}{7{,}585}j\right) 10V$$

## 3. Passive Filters and Bode Plots (15 points)

For the circuit below, if we have the component values below, the following 4 Bode plots all correct for the transfer functions

$H_{c1}(s) = v_{c1}/v_{in}$ , $H_{c2}(s) = v_{c2}/v_{in}$ , $H_L(s) = v_L/v_{in}$ , *and* $H(s) = v_{out}/v_{in}$ .

**Which Bode plot represents** $H(s) = v_{out}/v_{in}$ **and how do you know**? *Note: solving for the transfer function is not required and attempting this is not recommended.* (15 points)

$C_1 = C_2 = 9.50548\text{nF}$ $L = 111.813\mu H$ $R_1 = R_2 = 50\Omega$

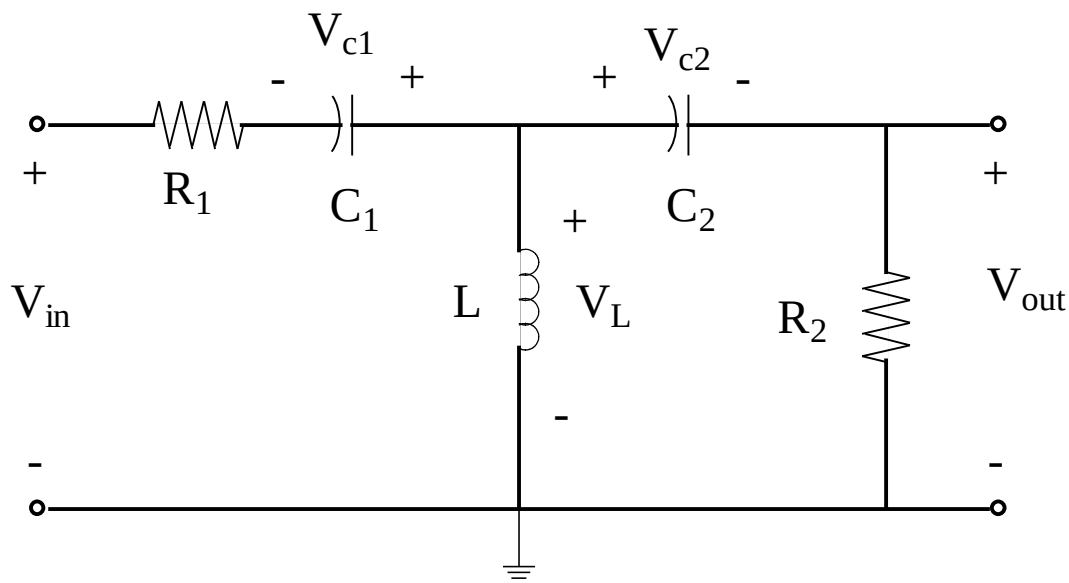


The correct bode plot is (circle only one):

A B C D

Explain your reasoning clearly and succinctly. No credit given without valid reasons.

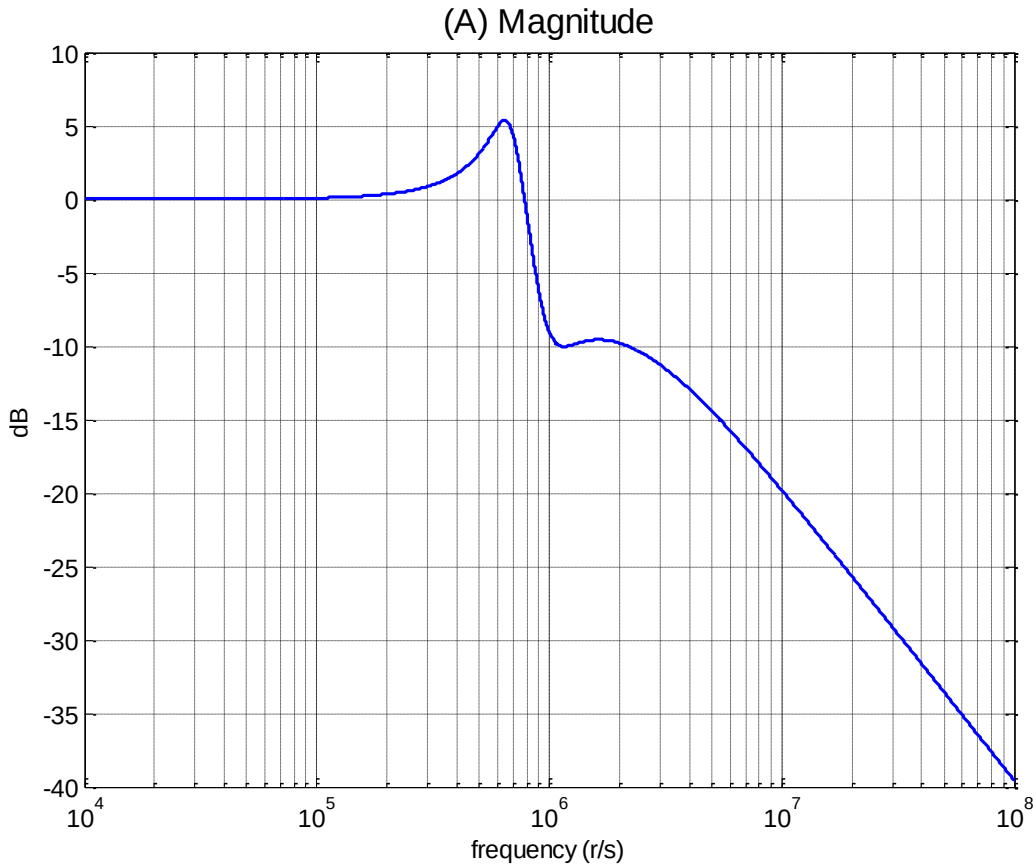
(A) Magnitude
10
5
0
-5
-10
-15
-20
-25
-30
-35
-40
dB
$10^4$
$10^5$
$10^6$
$10^7$
$10^8$
frequency (r/s)

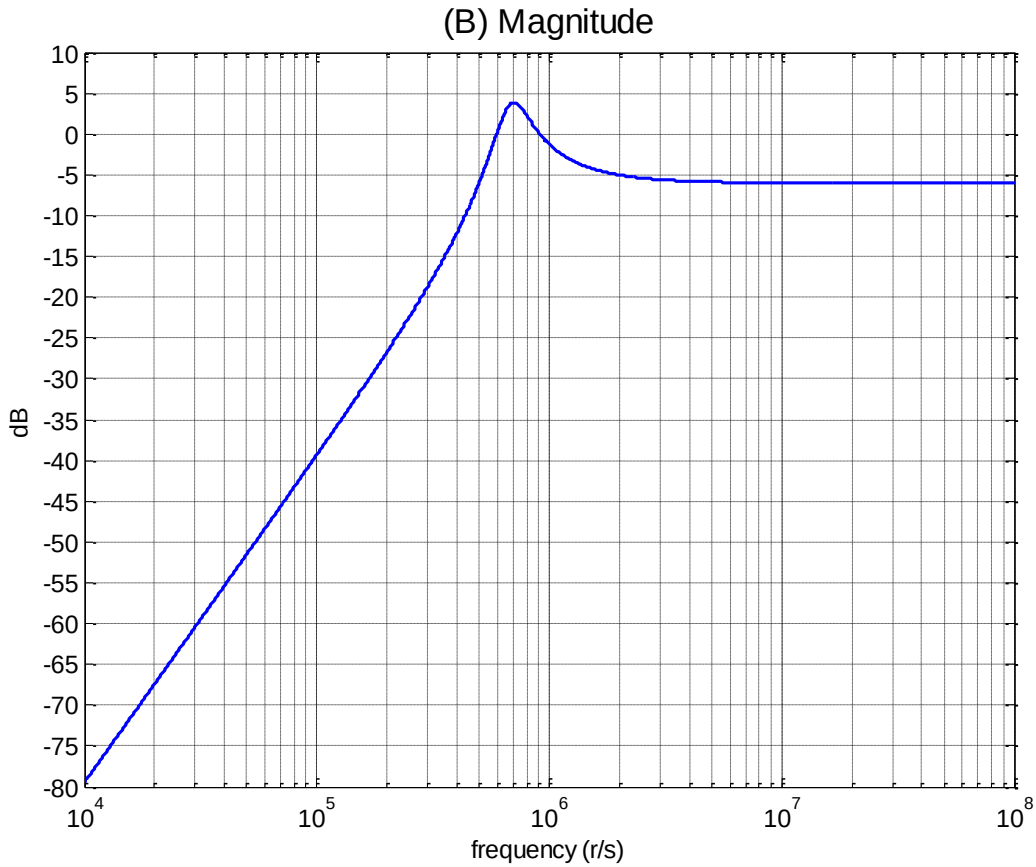
(B) Magnitude
10
5
0
-5
-10
-15
-20
-25
-30
-35
-40
-45
-50
-55
-60
-65
-70
-75
-80
dB
$10^4$
$10^5$
$10^6$
$10^7$
$10^8$
frequency (r/s)

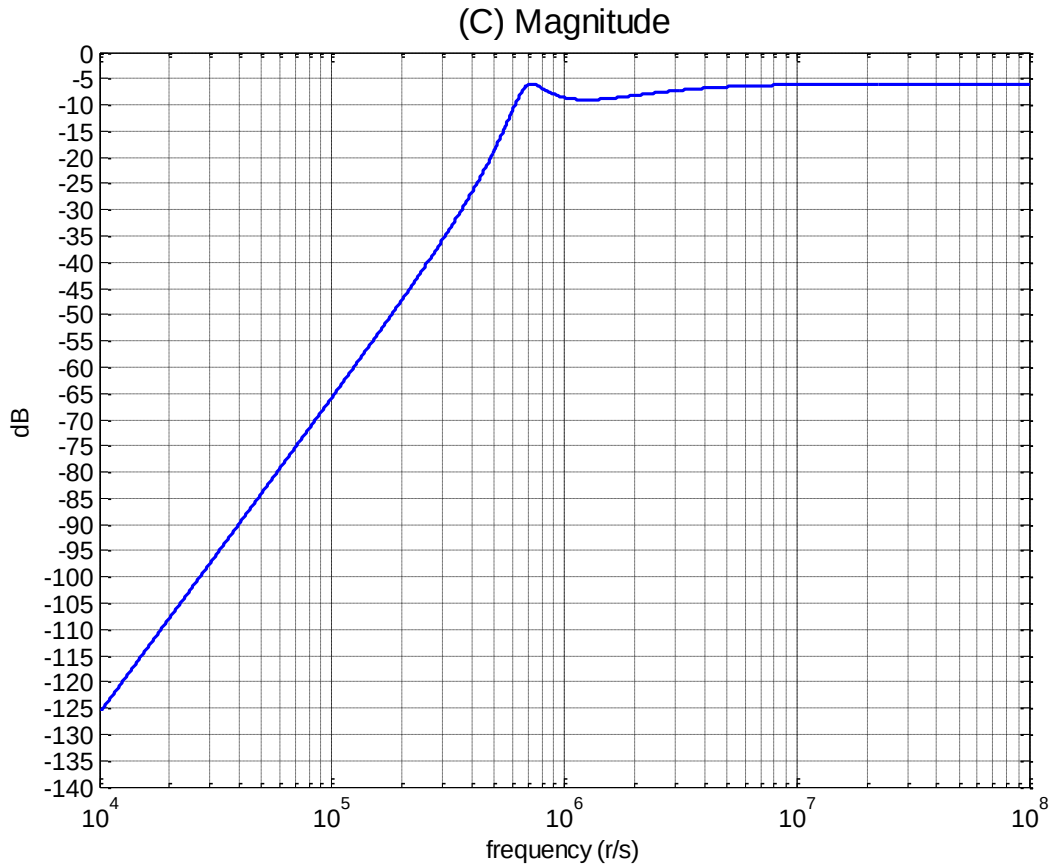
(C) Magnitude
dB
0
-5
-10
-15
-20
-25
-30
-35
-40
-45
-50
-55
-60
-65
-70
-75
-80
-85
-90
-95
-100
-105
-110
-115
-120
-125
-130
-135
-140
$10^4$
$10^5$
$10^6$
$10^7$
$10^8$
frequency (r/s)

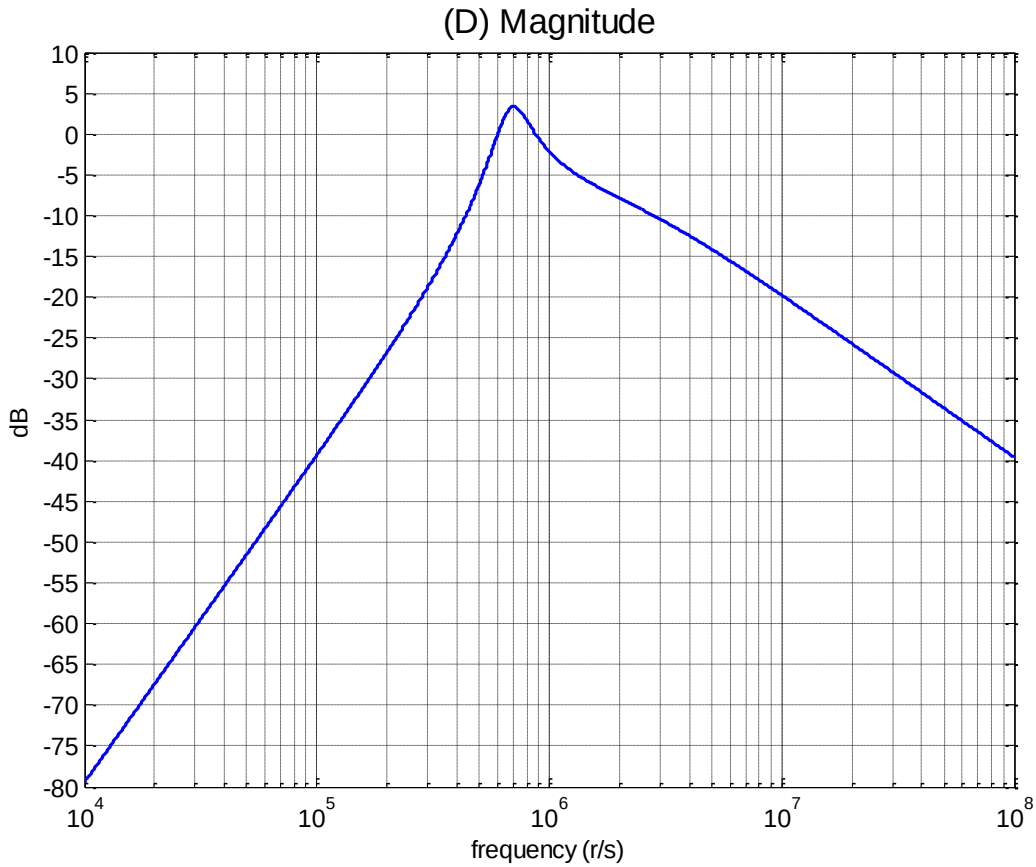
(D) Magnitude
10
5
0
-5
-10
-15
-20
-25
-30
-35
-40
-45
-50
-55
-60
-65
-70
-75
-80
dB
$10^4$
$10^5$
$10^6$
$10^7$
$10^8$
frequency (r/s)

## Problem 4: Active Filters (20 points)

a) For the circuit below, derive the transfer function $H(s) = \frac{v_0}{v_{in}}$ (15 points)

H(s)= _____

_____

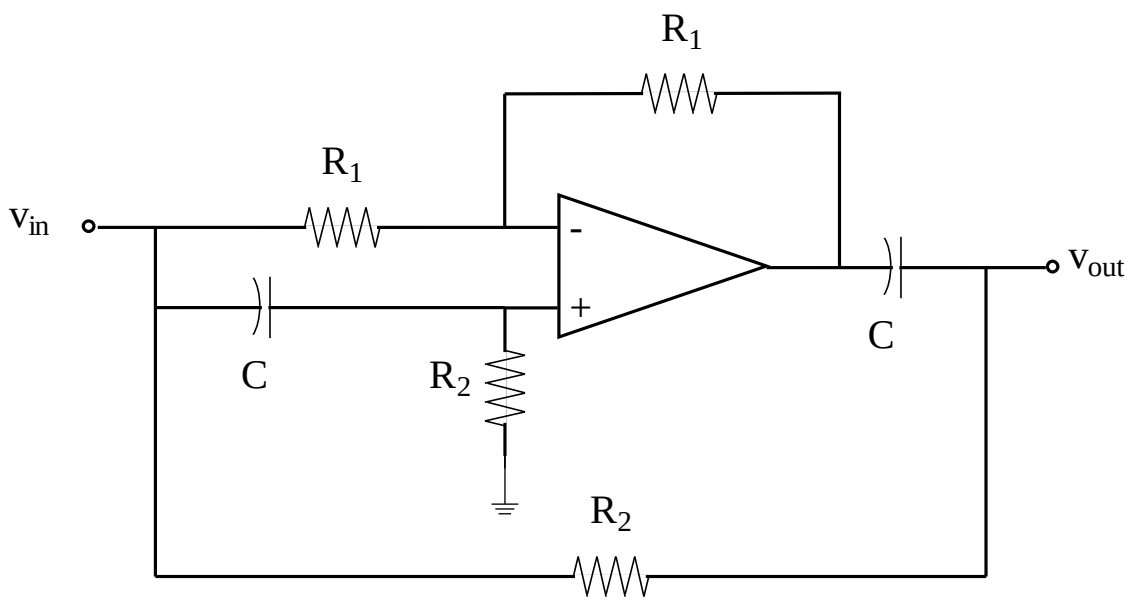

Workspace for 4(a)

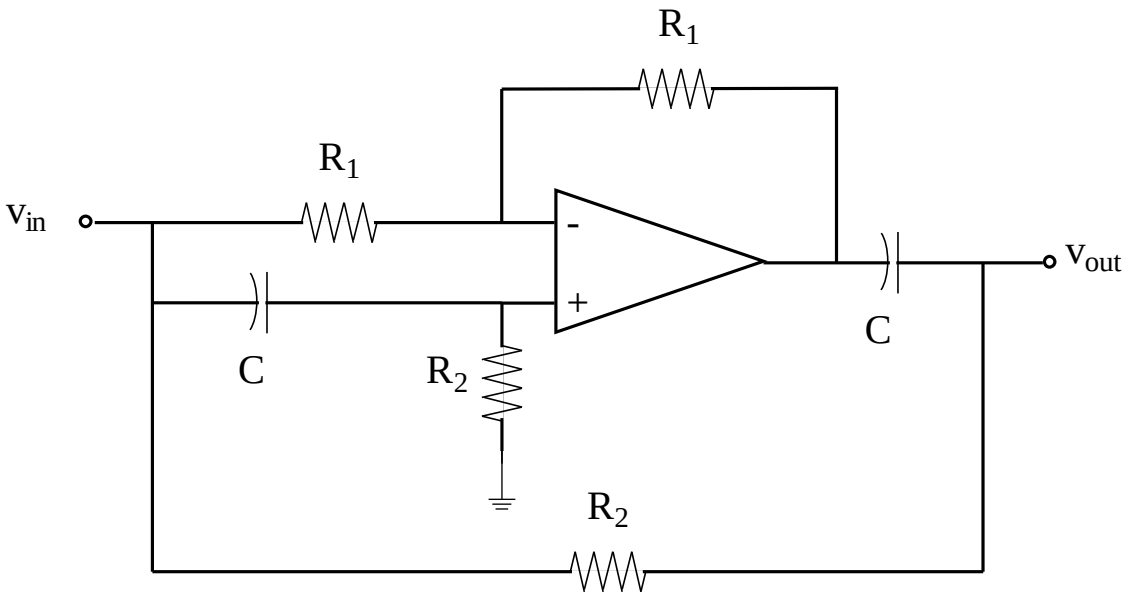

Additional Workspace for 4(a)

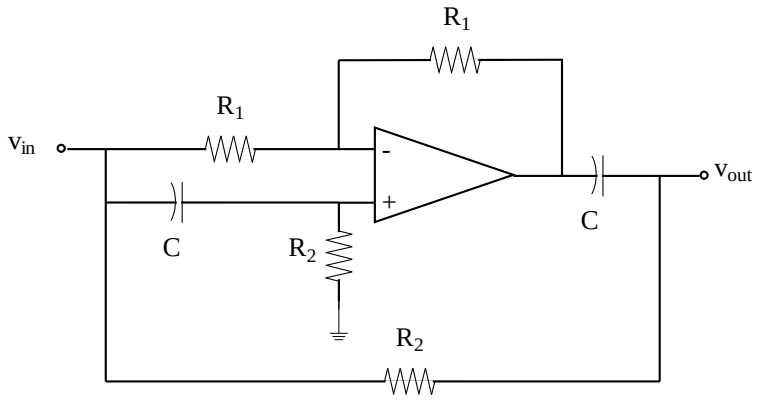

b) Either from your transfer function and/or circuit analysis, what type of filter is this? Hint: Look at H(ω) not H(s) (5 points)

Filter type is (circle only one):

Low-Pass High-Pass

Band-Pass Band-Stop/Band-Reject/Notch

No credit without a clear, concise, correct set of reasons in your work.

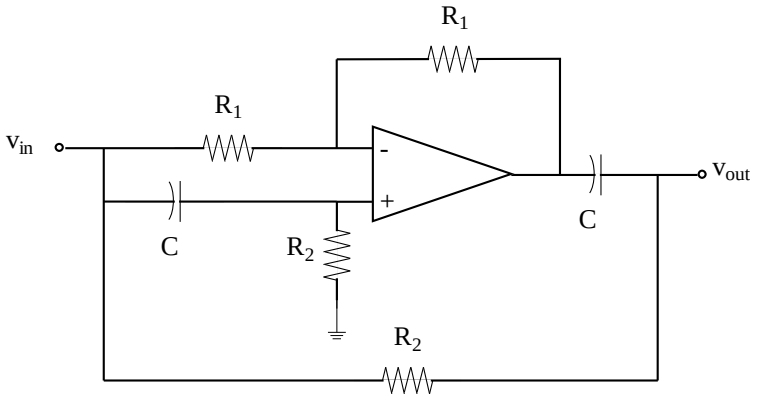

Workspace for 4 (b)

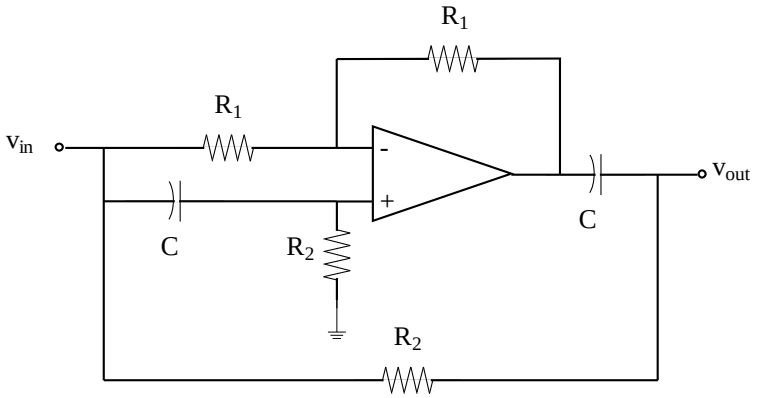

# EECS 215 Final Exam Equation Sheets

## First Order Circuits

| Source-free RC ($v_s$=0) | Source-free RL ($v_s$=0) |
|---|---|
| 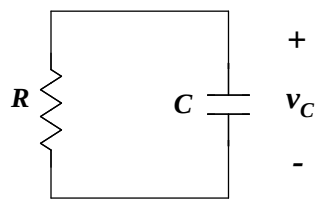 | 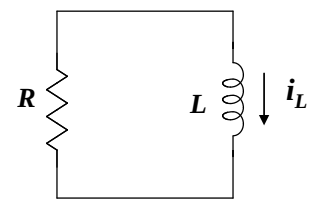 |
| $v_C(t) = v_C(0)e^{-t/RC} = v_C(0)e^{-t/\tau}$ | $i_L(t) = i_L(0)e^{-tR/L} = i_L(0)e^{-t/\tau}$ |

| Step response RC ($v_s$=$V_S$ $u(t)$) | Step response RL ($v_s$=$V_S$ $u(t)$) |
|---|---|
| 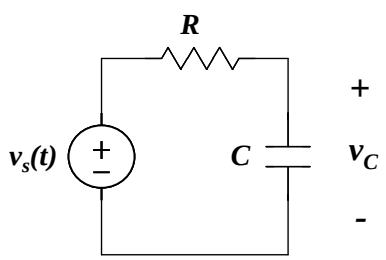 | 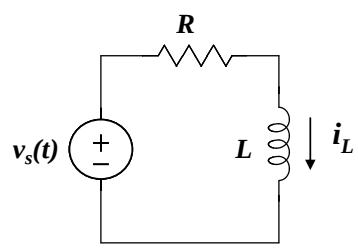 |
| $v_C(t) = V_S + (v_C(0) - V_S)e^{-t/RC}$<br>$v_C(t) = v_C(\infty) + (v_C(0) - v_C(\infty))e^{-t/RC}$ | $i_L(t) = \frac{V_S}{R} + \left(i_L(0) - \frac{V_S}{R}\right)e^{-tR/L}$<br>$i_L(t) = i_L(\infty) + (i_L(0) - i_L(\infty))e^{-tR/L}$ |

**General procedure for first order circuits:**

1) Find Thevenin/Norton equivalent
2) Determine time constant ($R_{eq}C$ or $L/R_{eq}$)
3) Determine initial value for capacitor or inductor.
4) Determine forced solution. For step response, this is the final value. For time dependent input, use trial function in differential equation and determine unknown constants.
5) Apply initial/boundary condition to determine unknown constant.

# Second Order Circuits

| **Source-free Series RLC ($v_s$=0)<br>(or natural solution for series RLC)** | **Source-free Parallel RLC ($v_s$=0)<br>(or natural solution for parallel RLC)** |
|---|---|
| 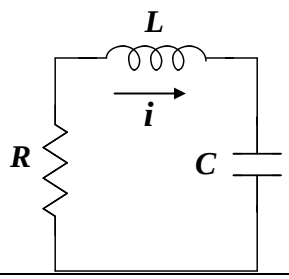 | 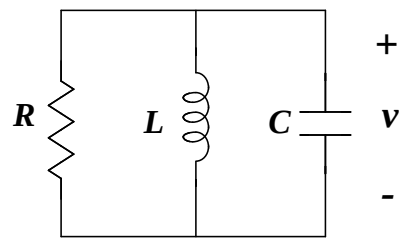 |
| Differential Equation:<br>$\frac{d^2 i}{dt^2} + \frac{R}{L}\frac{di}{dt} + \frac{i}{LC} = 0$ | Differential Equation:<br>$\frac{d^2 v}{dt^2} + \frac{1}{RC}\frac{dv}{dt} + \frac{v}{LC} = 0$ |
| Characteristic Equation:<br>$s^2 + s\frac{R}{L} + \frac{1}{LC} = 0$ | Characteristic Equation:<br>$s^2 + s\frac{1}{RC} + \frac{1}{LC} = 0$ |
| **Source-free Series RLC (continued)** | **Source-free Parallel RLC (continued)** |
| Roots:<br>$s_{1,2} = -\frac{R}{2L} \pm \sqrt{\left(\frac{R}{2L}\right)^2 - \frac{1}{LC}}$<br>$s_{1,2} = -\alpha \pm \sqrt{\alpha^2 - \omega_0^2}$<br>$\alpha = \frac{R}{2L} \qquad \omega_0 = \frac{1}{\sqrt{LC}}$ | Roots:<br>$s_{1,2} = -\frac{1}{2RC} \pm \sqrt{\left(\frac{1}{2RC}\right)^2 - \frac{1}{LC}}$<br>$s_{1,2} = -\alpha \pm \sqrt{\alpha^2 - \omega_0^2}$<br>$\alpha = \frac{1}{2RC} \qquad \omega_0 = \frac{1}{\sqrt{LC}}$ |
| Solutions:<br>Overdamped, $\alpha > \omega_0$<br>$i(t) = A_1 e^{s_1 t} + A_2 e^{s_2 t}$<br>Critically damped, $\alpha = \omega_0$<br>$i(t) = (A_1 t + A_2)e^{-\alpha t}$<br>Underdamped, $\alpha < \omega_0$<br>$i(t) = (B_1 \cos\omega_d t + B_2 \sin\omega_d t)e^{-\alpha t}$<br>$\omega_d = \sqrt{\omega_0^2 - \alpha^2}$ | Solutions:<br>Overdamped, $\alpha > \omega_0$<br>$v(t) = A_1 e^{s_1 t} + A_2 e^{s_2 t}$<br>Critically damped, $\alpha = \omega_0$<br>$v(t) = (A_1 t + A_2)e^{-\alpha t}$<br>Underdamped, $\alpha < \omega_0$<br>$v(t) = (B_1 \cos\omega_d t + B_2 \sin\omega_d t)e^{-\alpha t}$<br>$\omega_d = \sqrt{\omega_0^2 - \alpha^2}$ |

**General procedure for second order circuits:**

1) Get differential equation in form $\frac{d^2 v}{dt^2} + 2\alpha\frac{dv}{dt} + \omega_0^2 v = f(t)$ (or in terms of $i$)
2) Determine $\alpha$ and $\omega_0$ and determine natural solution
3) Determine forced solution (for step response, this is the final/steady state value)
4) Determine initial conditions (e.g. $v(0^+)$ and $dv(0^+)/dt$)
5) Apply initial conditions to complete solution to determine unknown constants

| Factor | Bode Magnitude | Bode Phase |
|---|---|---|
| **Constant**<br>$K$ | | 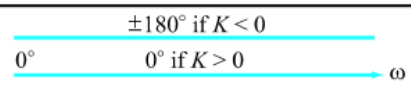 |
| **Zero @ Origin**<br>$(j\omega)^N$ | 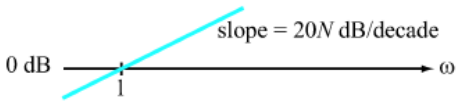 | 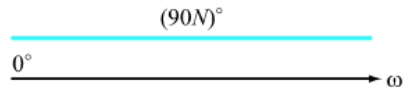 |
| **Pole @ Origin**<br>$(j\omega)^{-N}$ | 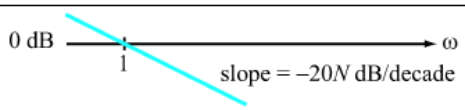 | 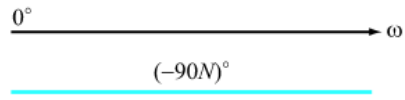 |
| **Simple Zero**<br>$(1 + j\omega/\omega_c)^N$ | 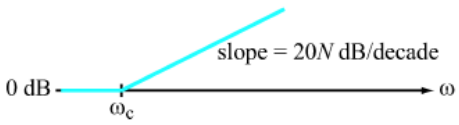 | 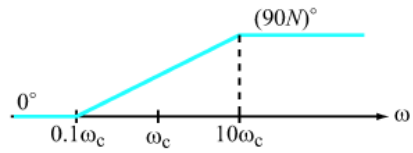 |
| **Simple Pole**<br>$\left(\frac{1}{1 + j\omega/\omega_c}\right)^N$ | 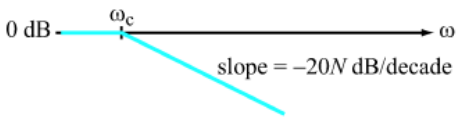 | 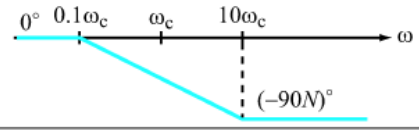 |
| **Quadratic Zero**<br>$[1 + j2\xi\omega/\omega_c + (j\omega/\omega_c)^2]^N$ | 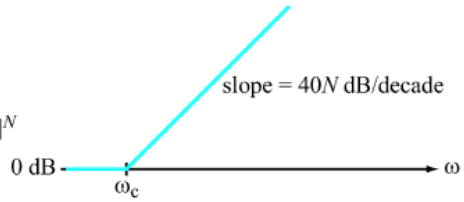 | 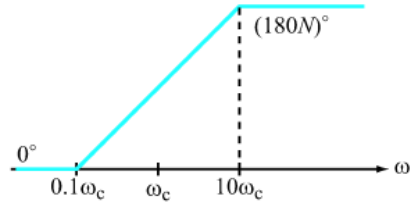 |
| **Quadratic Pole**<br>$\frac{1}{[1 + j2\xi\omega/\omega_c + (j\omega/\omega_c)^2]^N}$ | 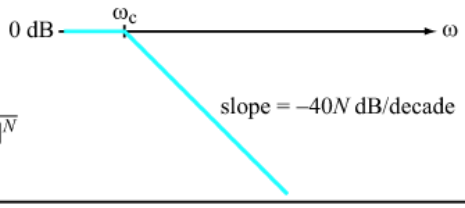 | 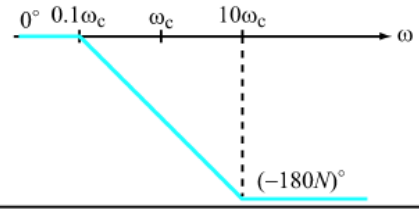 |