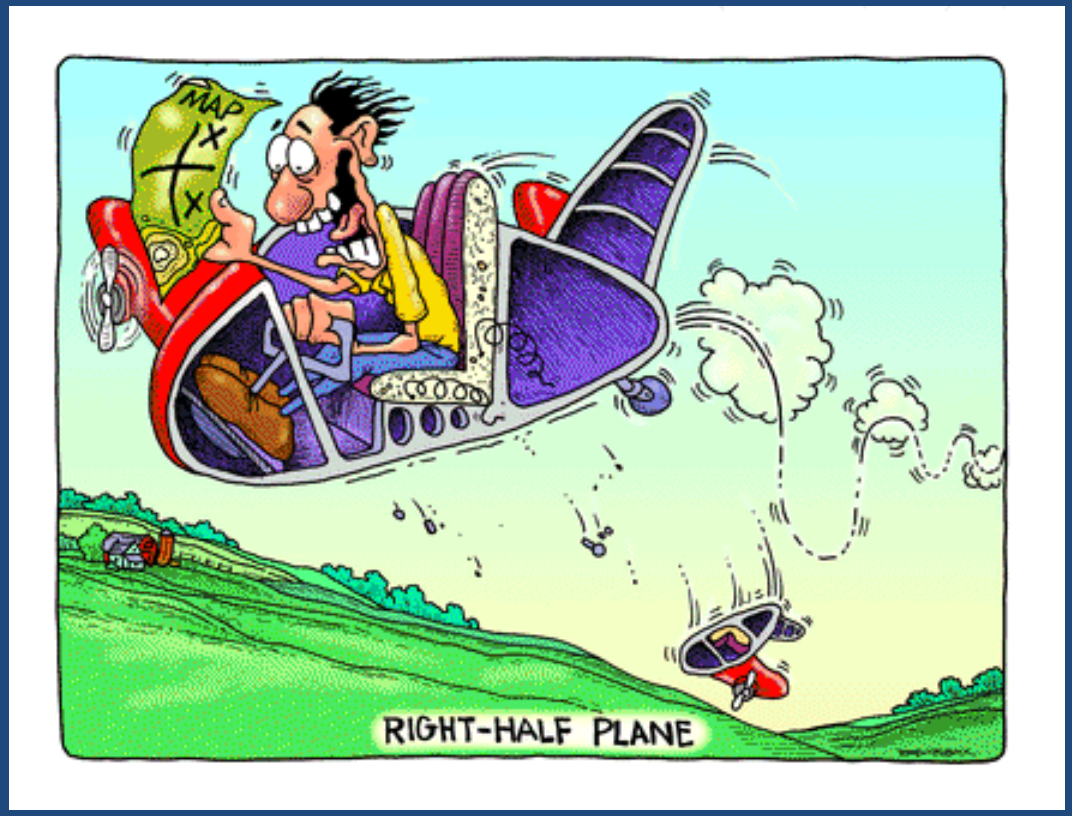

FIRST ORDER CIRCUITS EXAMPLE: NEGATIVE VS. POSITIVE FEEDBACK

© Fred Terry
Fall, 2013

Non-ideal Inverting Amp

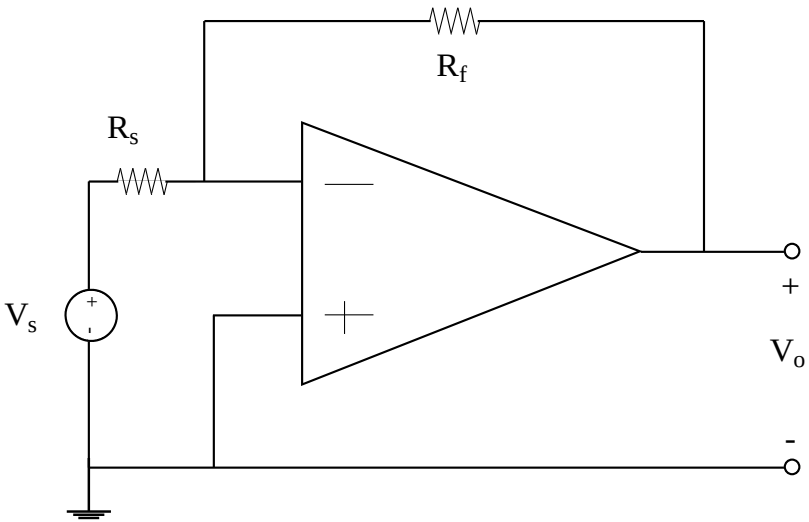

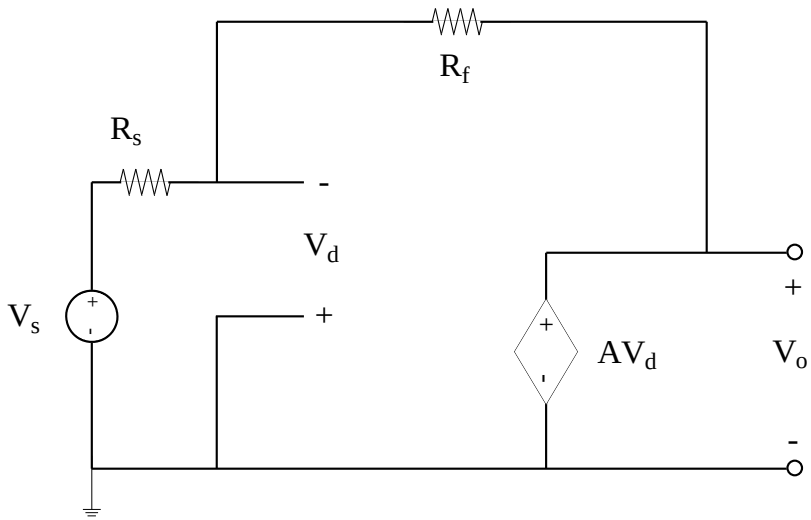

Schmidt Trigger Configuration

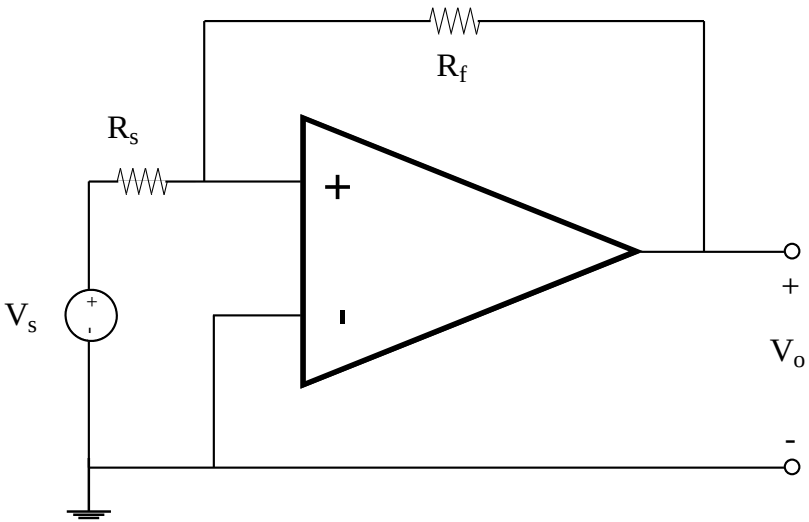

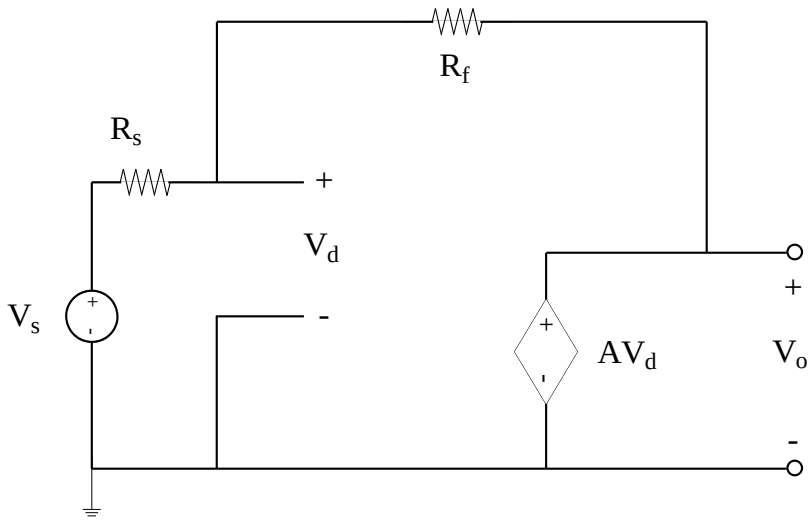

Nodal Analysis

Negative Feedback Case: $v_d = -V_1$

Positve Feedback Case: $v_d = +V_1$

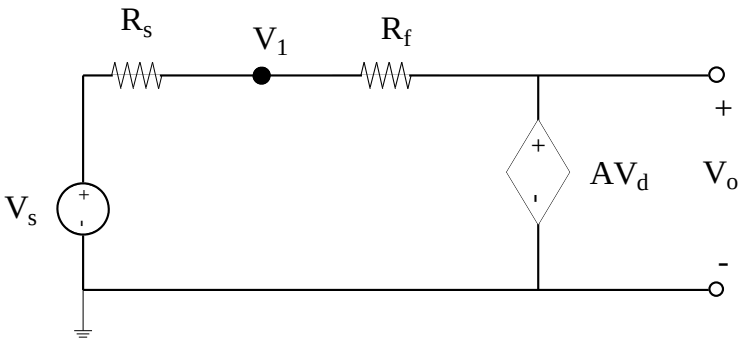

Solution

Negative Feedback Case:

$$v_d = -V_1$$

$$V_1 = \left[\frac{R_f}{(A+1)R_s + R_f}\right]V_s \underset{A\to\infty}{\rightarrow} 0$$

$$V_0 = \left[\frac{-AR_f}{(A+1)R_s + R_f}\right]V_s \underset{A\to\infty}{\rightarrow} \left[\frac{-R_f}{R_s}\right]V_s$$

Positve Feedback Case:

$$v_d = +V_1$$

$$V_1 = \left[\frac{R_f}{(-A+1)R_s + R_f}\right]V_s \underset{A\to\infty}{\rightarrow} 0$$

$$V_0 = \left[\frac{AR_f}{(-A+1)R_s + R_f}\right]V_s \underset{A\to\infty}{\rightarrow} \left[\frac{-R_f}{R_s}\right]V_s$$

Both Solutions are Good for Large Open Loop Gain (Large A)

So What's the Big Deal About Negative vs. Positive Feedback?

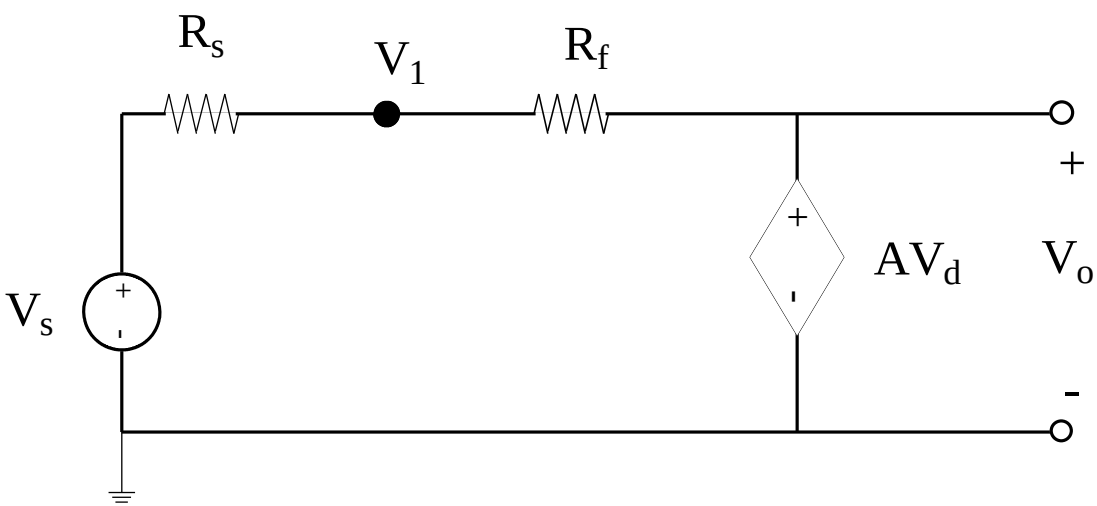

Negative vs. Positive Feedback

- Assume for example that $V_s>0$
- Positive Feedback Case
  - The Allowed DC Solution has $V_1=V_d<0$ and $V_o=Av_d<0$: No Way to Get There in This Circuit
  - Even If We Force The Circuit To This State, It Is Unstable
- Negative Feedback Case
  - The Allowed DC Solution has $V_1=-V_d$, $V_1>0$ and $V_o=Av_d<0$: Reaching This State Is No Problem
  - The Circuit Is Stable To Small Changes

Dynamics

- To Consider the *Dynamics* (evolution of voltages in time), We Need to Add Energy Storage Elements to Our Circuit Model
- The Real Situation Would Be More Complex, but The Essential Issues Can Be Understood by Adding Only an Input Capacitance
- This Will Not Explain the *Slew Rate* (The Maximum Volts/s that the Output of the Op-Amp Will Supply). This Would Require at Least a 2nd Order Circuit Model

Model Case

$$A = 10^5 \quad but \ |V_0| \le V_{CC}$$

$$V_{CC} = 15V$$

$$C_{in} = 10\,pF$$

$$R_s = 1K\Omega \quad R_f = 10K\Omega$$

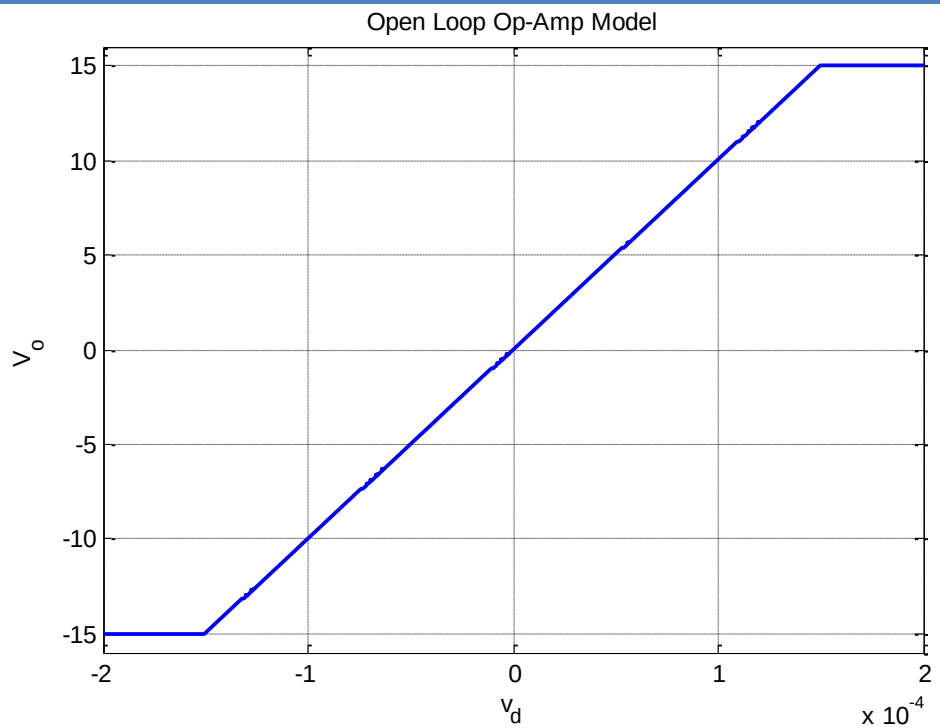

First Order Circuit Model

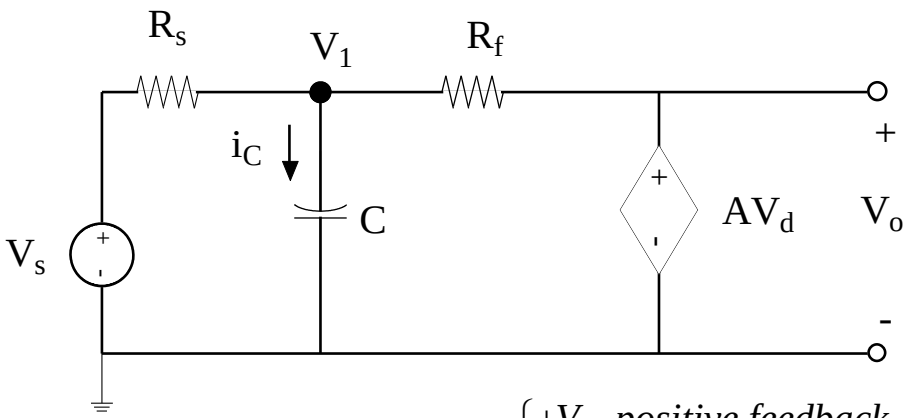

$$v_d = \begin{cases} +V_1 & \textit{positive feedback} \\ -V_1 & \textit{negative feedback} \end{cases}$$

First Order Circuit Model

$$i_c = C\frac{dV_1}{dt} = \frac{V_s - V_1}{R_s} + \frac{Av_d - V_1}{R_f} = \begin{cases} \dfrac{V_s - V_1}{R_s} + \dfrac{(+AV_1 - V_1)}{R_f} & \textit{Postive Feedback} \\ \dfrac{V_s - V_1}{R_s} + \dfrac{(-AV_1 - V_1)}{R_f} & \textit{Negative Feedback} \end{cases}$$

$$\frac{V_s}{R_s} = \begin{cases} C\dfrac{dV_1}{dt} + \left[\dfrac{1}{R_s} + \dfrac{(1-A)}{R_f}\right]V_1 & \textit{Postive Feedback} \\ C\dfrac{dV_1}{dt} + \left[\dfrac{1}{R_s} + \dfrac{(1+A)}{R_f}\right]V_1 & \textit{Negative Feedback} \end{cases}$$

$$\frac{V_s}{R_s C} = \begin{cases} \dfrac{dV_1}{dt} + \left[\dfrac{R_f + (1-A)R_s}{R_f R_s C}\right]V_1 & \textit{Postive Feedback} \\ \dfrac{dV_1}{dt} + \left[\dfrac{R_f + (1+A)R_s}{R_f R_s C}\right]V_1 & \textit{Negative Feedback} \end{cases}$$

$$\frac{V_s}{10ns} = \begin{cases} \dfrac{dV_1}{dt} + \left[\dfrac{-1}{1.0001ps}\right]V_1 & \textit{Postive Feedback} \\ \dfrac{dV_1}{dt} + \left[\dfrac{1}{0.99989ps}\right]V_1 & \textit{Negative Feedback} \end{cases}$$

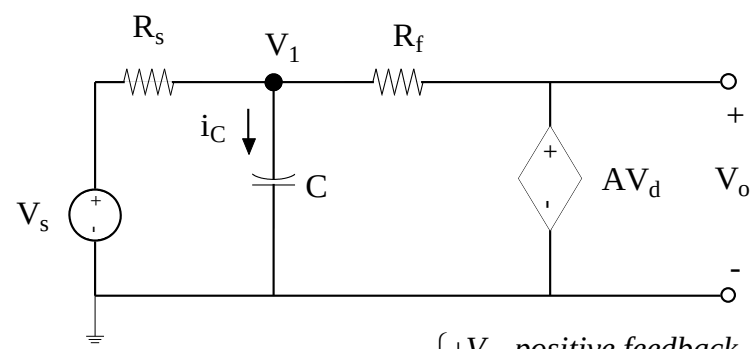

$$v_d = \begin{cases} +V_1 & \textit{positive feedback} \\ -V_1 & \textit{negative feedback} \end{cases}$$

Negative Feedback Case

$$V_s = 1V\ u(t)$$

$$\frac{V_s}{10ns} = \frac{dV_1}{dt} + \left[\frac{1}{0.99989\,ps}\right]V_1$$

$$DC\ Forced\ Solution:\ \frac{dV_1}{dt} = 0$$

$$V_{1,f} = \frac{0.99989\,ps}{10ns}1V = 99.989\,\mu V \approx 0.1mV$$

$$V_1(t) = V_{1,f}\left(1 - e^{-t/\tau}\right)u(t) \quad \tau \approx 0.99989\,ps$$

$$V_o(t) = -AV_1(t) \approx -9.9989\left(1 - e^{-t/\tau}\right)u(t)V$$

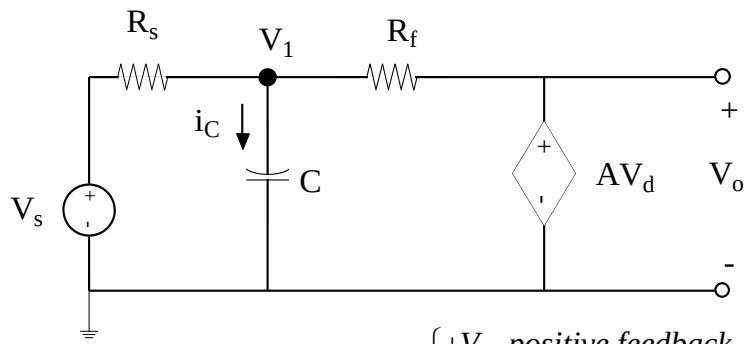

$$v_d = \begin{cases} +V_1 & positive\ feedback \\ -V_1 & negative\ feedback \end{cases}$$

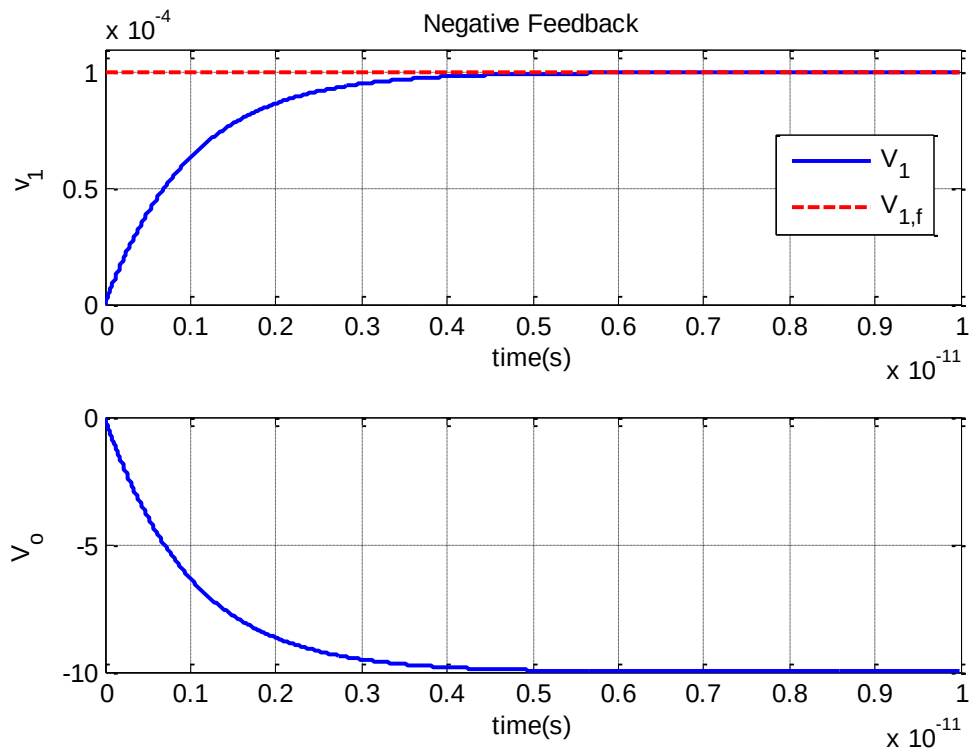

Equivalent Resistance "Seen" By Capacitor: Positive Feedback Case

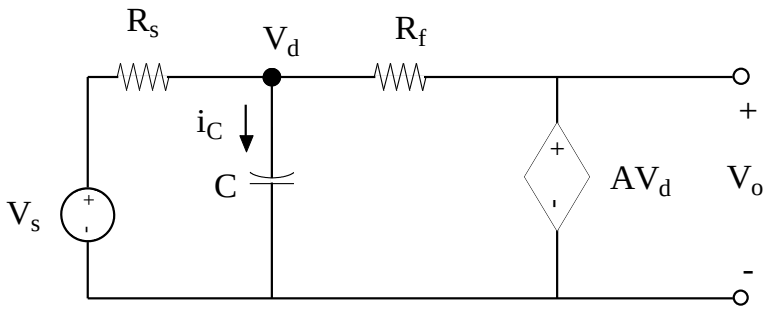

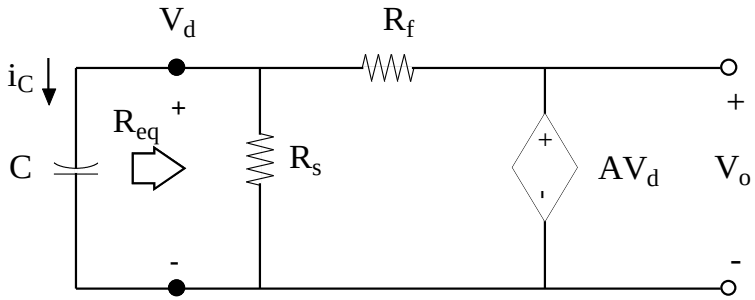

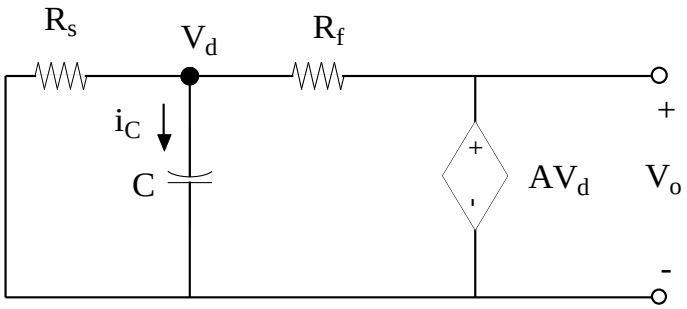

Equivalent Resistance "Seen" By Capacitor: Positive Feedback Case

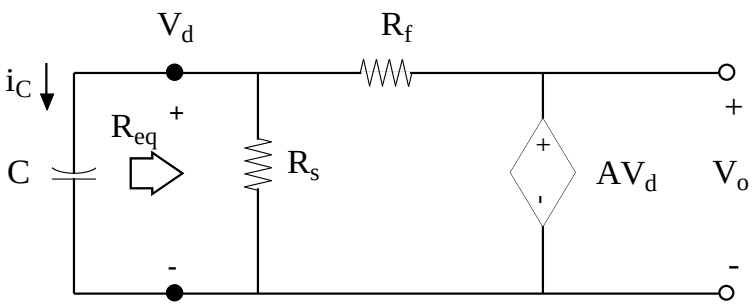

$$i_f = \frac{(v_d - Av_d)}{R_f} = \frac{v_d(1-A)}{R_f}$$

$$R_{eq1} = \frac{v_d}{i_f} = \frac{R_f}{(1-A)} \quad \textit{Negative for } A>1!$$

$$R_{eq} = R_s \parallel R_{eq1} = \frac{R_f R_s}{(1-A)R_s + R_f} \quad \textit{Negative for } A > \left(\frac{R_f}{R_s}+1\right)$$

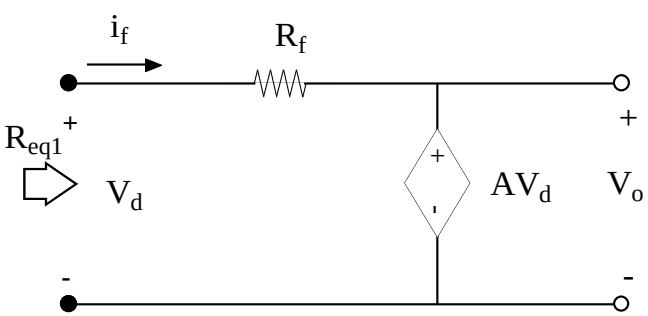

Positive Feedback Makes the R_f Resistor Look <u>Negative</u> from the View of the Input Capacitor

Thevenin Equivalents Seen by the Capacitor

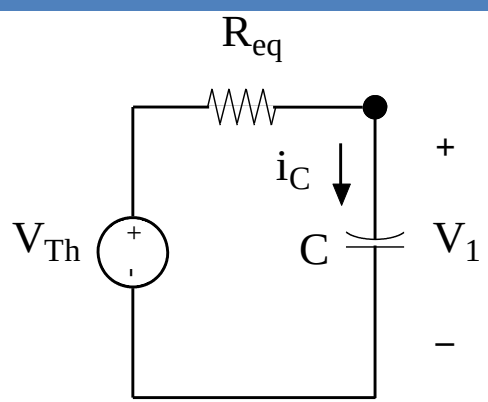

Positive Feedback Case:

$$V_{TH} = \left[\frac{R_f}{(1-A)R_s + R_f}\right]V_s$$

$$R_{eq} = R_s \parallel R_{eq1} = \frac{R_f R_s}{(1-A)R_s + R_f}$$

$$V_o = +AV_1$$

Negative Feedback Case:

$$V_{TH} = \left[\frac{R_f}{(1+A)R_s + R_f}\right]V_s$$

$$R_{eq} = R_s \parallel R_{eq1} = \frac{R_f R_s}{(1+A)R_s + R_f}$$

$$V_o = -AV_1$$

Capacitor Charging Current

If $V_c(0)=0V$, then for both cases (positive and negative feedback):

$$i_c(0^+)=\frac{V_{TH}}{R_{eq}}=\frac{V_S}{R_s} \text{ for both cases}$$

For the negative feedback case, this pushes V_1 in the right direction.

For the positive feeback case, this pushes V_1 in the wrong direction leading to run-away.

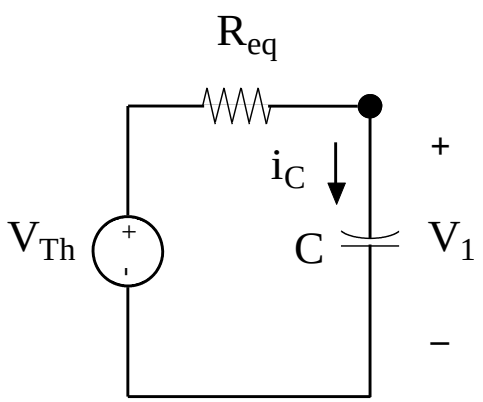

Positive Feedback Case

$$\frac{V_s}{10ns} = \frac{dV_1}{dt} + \left[\frac{-1}{1.0001ps}\right]V_1$$

$$DC\ Forced\ Solution:\ \frac{dV_1}{dt} = 0$$

$$V_{1,f} = \left(-\frac{1.0001ps}{10ns}\right)1V = -0.10001mV$$

$$\tau = -1.0001ps\ (yes,\ negative\ time\ constant!)$$

$$V_1(t) = V_{1,f}\left(1 - e^{-t/\tau}\right)u(t)$$

$$V_1(t) = -0.10001mV\left(1 - e^{+t/1.0001ps}\right)u(t)\ V$$

$$V_1(t) = +0.10001mV\left(e^{+t/1.0001ps} - 1\right)u(t)\ V$$

$$V_o(t) = AV_1(t) \approx 10.001\left(e^{+t/1.0001ps} - 1\right)u(t)V$$

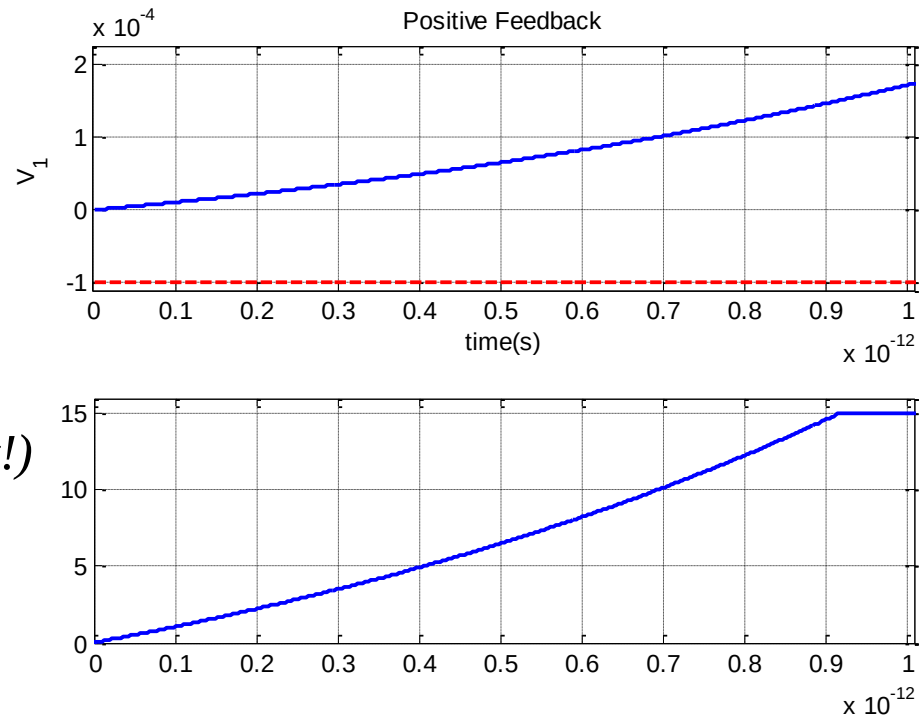

Summary

- Negative Feedback Drives Input Node Toward Correct DC Point
  - Inherent Stability
- Positive Feedback Drives Input Node *Away* from Correct DC Point
  - Inherent Instability
- To See That The Positive Feedback Case Is Inherently Unstable, Let's Assume We Force It To The Correct Point & Then Have A Small Perturbation

Model Case II

Positive Feedback Connection

$A = 10^5 \;\; but \; |V_0| \le V_{CC}$

$V_{CC} = 15V$

$C_{in} = 10\,pF$

$R_s = 1K\Omega \;\; R_f = 10K\Omega$

For $t < 0$:

$V_s = 1V$

$$V_{1,0} = \left[\frac{R_f}{(-A+1)R_s + R_f}\right] V_s \approx -0.100011mV$$

$$V_{0,0} = \left[\frac{AR_f}{(-A+1)R_s + R_f}\right] V_s \approx -10.00011V$$

Now suppose $V_s = 1V + (1\mu V)u(t)$

We still have:

$$\frac{V_s}{10ns} = \frac{dV_1}{dt} + \left[\frac{-1}{1.0001ps}\right] V_1$$

DC Forced Solution: $\frac{dV_1}{dt} = 0$

$$V_{1,f} = \left(-\frac{1.0001ps}{10ns}\right)(1V + 1\mu V) = -0.10001mV$$

$\tau = -1.0001ps$ *(yes, negative time constant!)*

For $t \ge 0$ *until* V_{cc} *limit*

$$V_1(t) = V_{1,f} + (V_{1,f} - V_{1,0})e^{-t/\tau}$$

$$V_1(t) = -0.10001mV + (0.10001nV)e^{+t/1.0001ps}$$

This will have $V_1(t) = 0.15mV$ *in ~14.73ps!*

Positive Feedback Creates Strong Instability that Pushes the Output to the Maximum Voltage (V_{CC}) Limit

Similar Analysis Shows that Negative Feedback Pushes the Output to the DC Condition and is Inherently Stable

Positive Feedback with 1μV Perturbation

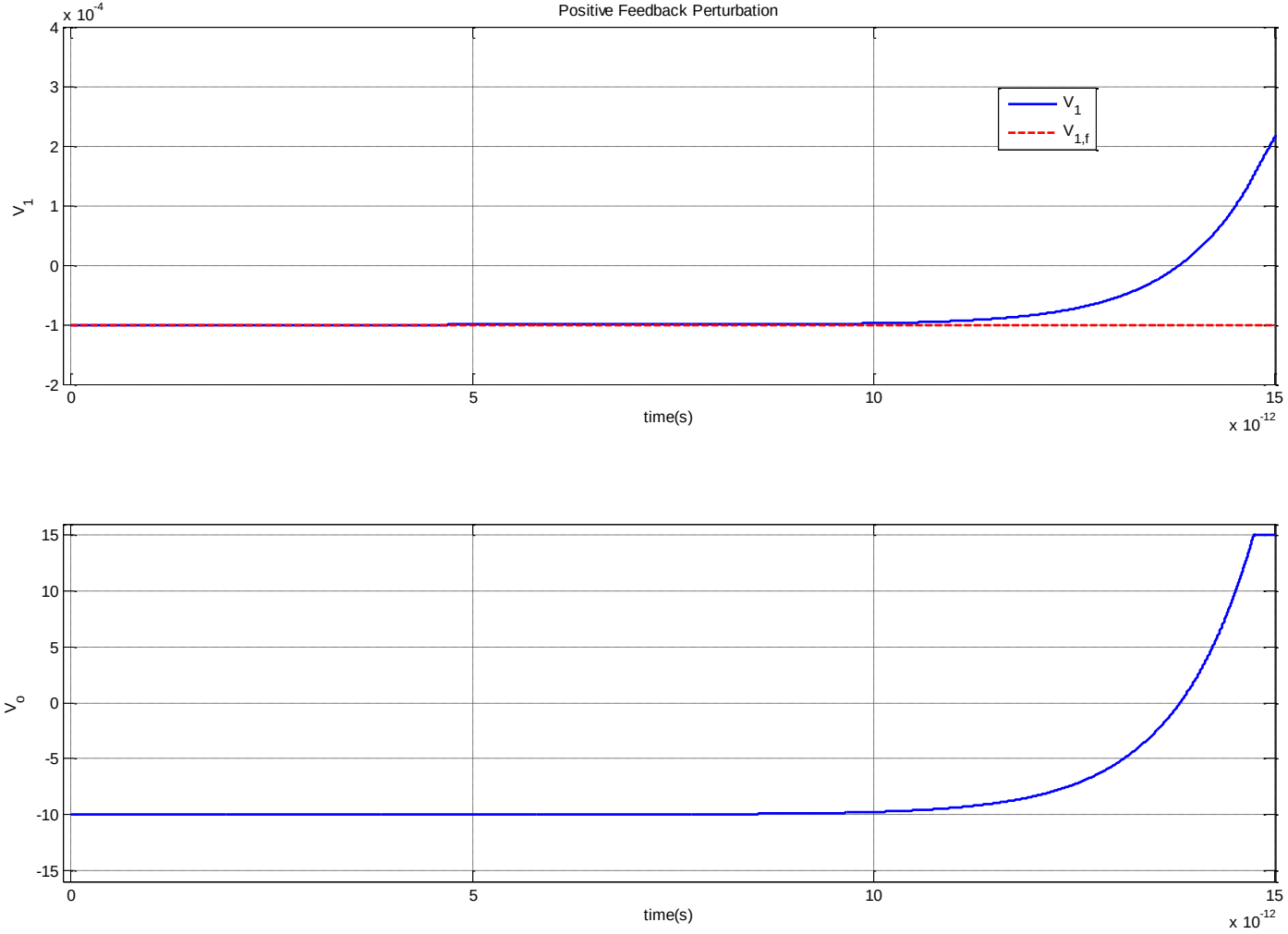

Schmidt Trigger

$$V_1 = v_d = \left(\pm V_{cc} - V_s\right)\left(\frac{R_s}{R_s + R_f}\right) + V_s = \left(\frac{\pm V_{cc} R_s}{R_s + R_f}\right) + \left(\frac{V_s R_f}{R_s + R_f}\right)$$

Output State Switches When $V_1 = v_d$ *changes sign (goes through zero)*

Suppose we start with V_s *strongly negative, then* $V_o = -V_{cc}$ *and* $v_d < 0$.

When does $v_d > 0$?

$$\left(\frac{-V_{cc} R_s}{R_s + R_f}\right) + \left(\frac{V_s R_f}{R_s + R_f}\right) > 0$$

$$-V_{cc} R_s + V_s R_f > 0 \rightarrow V_s > V_{cc}\left(\frac{R_s}{R_f}\right)$$

When V_s *exceeds* $V_{cc}\left(\frac{R_s}{R_f}\right)$ *we will switch states and* $V_o \rightarrow +V_{cc}$

Similar reasoning will show that as Vs decrease we will stay in the $+V_{cc}$ *state until* $V_s < -V_{cc}\left(\frac{R_s}{R_f}\right)$. *This forms a hysteresis loop.*

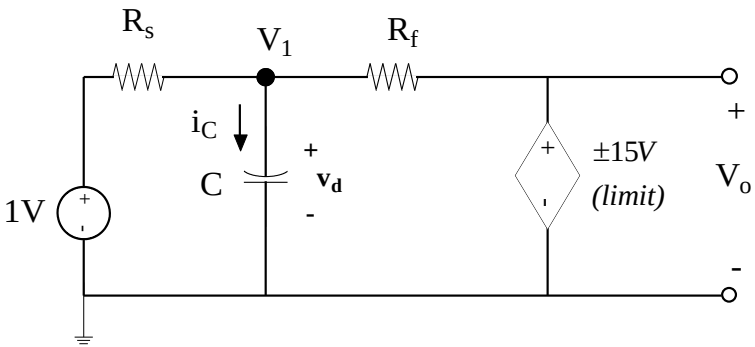

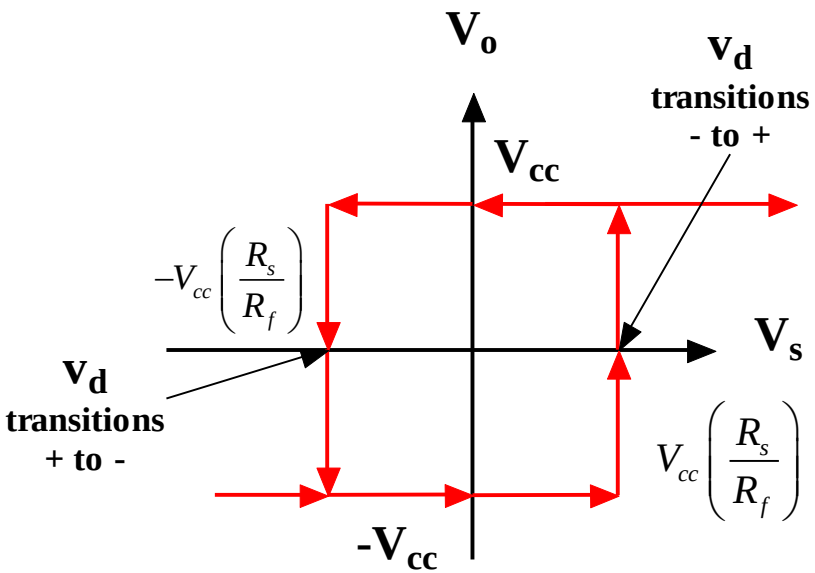

Schmidt Triggers

- Bi-stable Circuit (2 output states)
- Hysteresis (Switching Between States Depends on Path of Input Voltage Change)
- Schmidt Triggers and Other Bi-stable Circuits with Hysteresis Can Be Used for A Number of Applications:
  - Logic (including Memory)
  - Discrete Control Application
  - Building Blocks for Oscillators
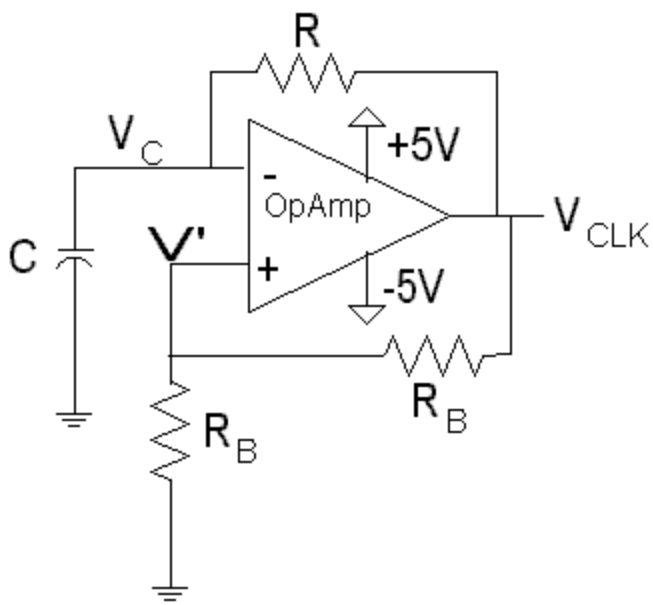
Relaxation Oscillator: Square Wave Generator