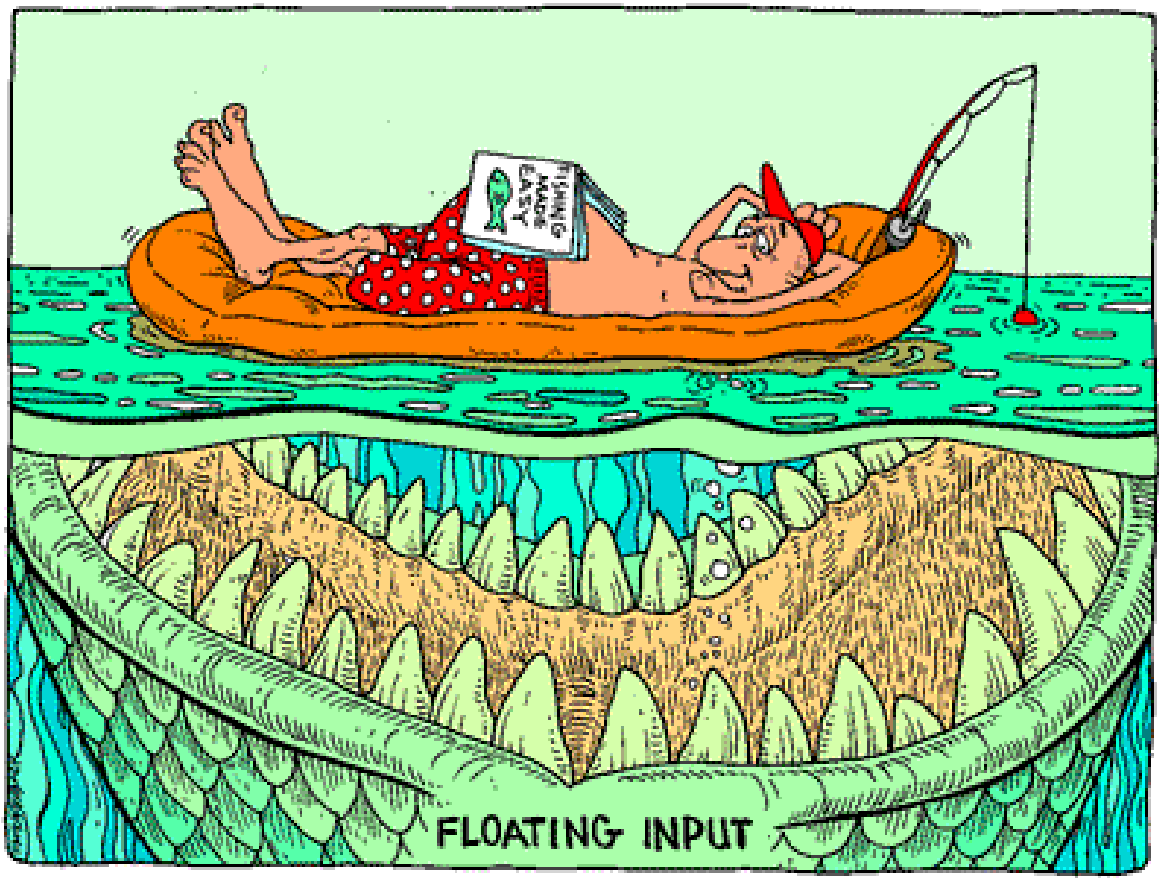

MESH ANALYSIS

Fred Terry

Fall, 2013

Mesh Analysis

- Mesh Loop: Any closed loop in a circuit that does not contain another loop
- Mesh Analysis
  - Assign a *mesh current* as circulating around each mesh loop
  - Write KVL equations for each mesh current using Ohm's Law
  - Solve to get unknown mesh currents
- Total "Real" Currents are the appropriate vector sum of the mesh currents
  - Mesh Currents are not the "Real" Currents on boundaries

A&S Practice Problem 3.6

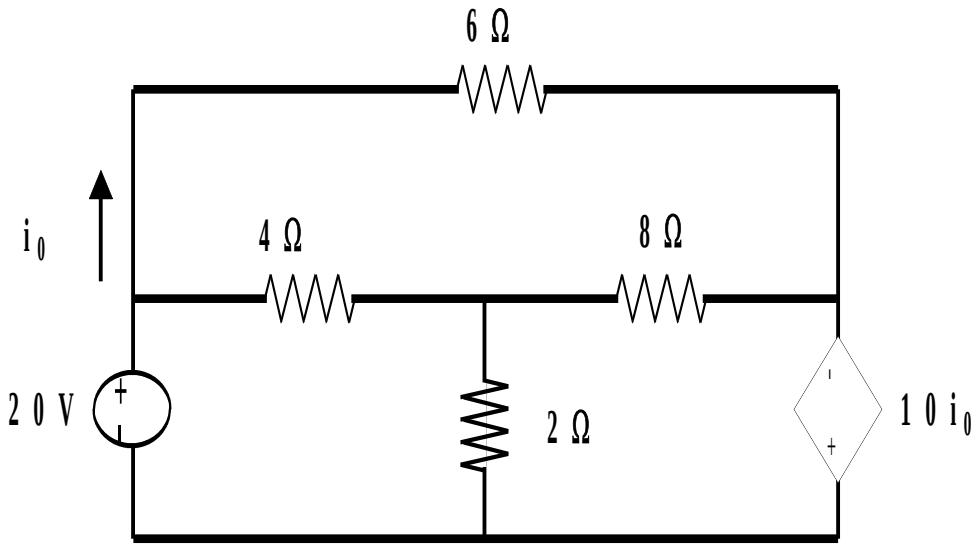

Mesh Procedure

- Label mesh loops
- Write KVL expressions using Ohm's Law and mesh currents
- Solve Resulting System of Linear Equations
- Only Works for Planar Circuits

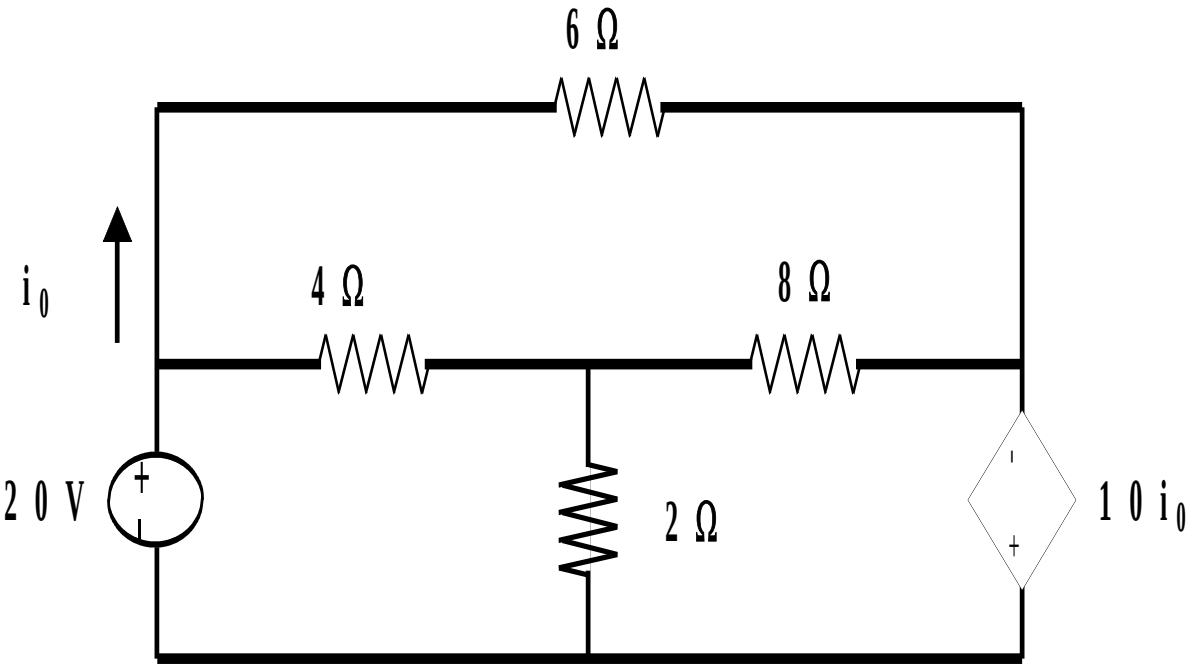

Mesh Example

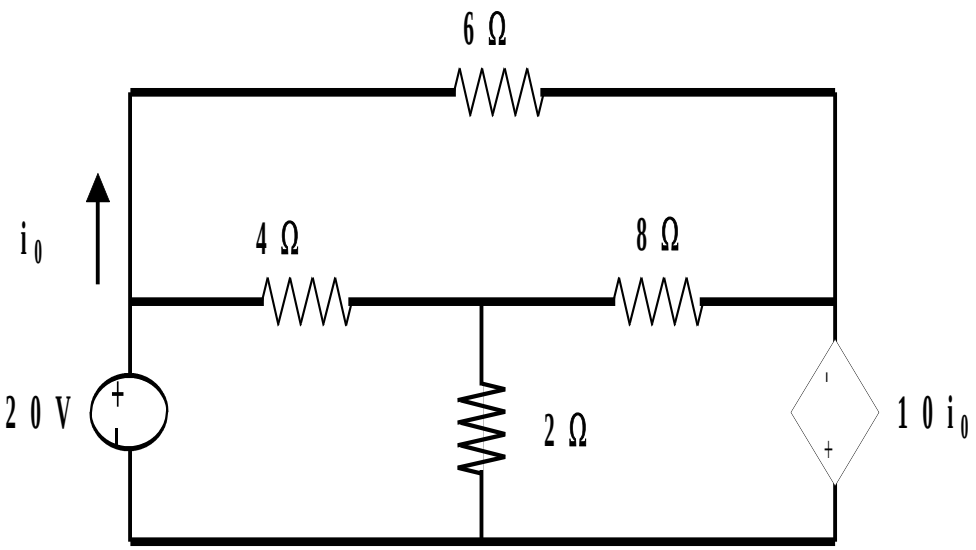

Mesh Example

KVL Mesh Loop 1

$$-20V + 4\Omega(i_1 - i_3) + 2\Omega(i_1 - i_2) = 0$$
$$i_1[4\Omega + 2\Omega] + i_2[-2\Omega] + i_3[-4\Omega] = 20V$$
$$i_1[6\Omega] + i_2[-2\Omega] + i_3[-4\Omega] = 20V$$

KVL Mesh Loop 2

$$2\Omega(i_2 - i_1) + 8\Omega(i_2 - i_3) - 10\Omega i_0 = 0$$
$$i_0 = i_3$$
$$i_1[-2\Omega] + i_2[2\Omega + 8\Omega] + i_3[-8\Omega - 10\Omega] = 0$$
$$i_1[-2\Omega] + i_2[10\Omega] + i_3[-18\Omega] = 0$$

KVL Mesh Loop 3

$$6\Omega i_3 + 8\Omega(i_3 - i_2) + 4\Omega(i_3 - i_1) = 0$$
$$i_1[-4\Omega] + i_2[-8\Omega] + i_3[18\Omega] = 0$$

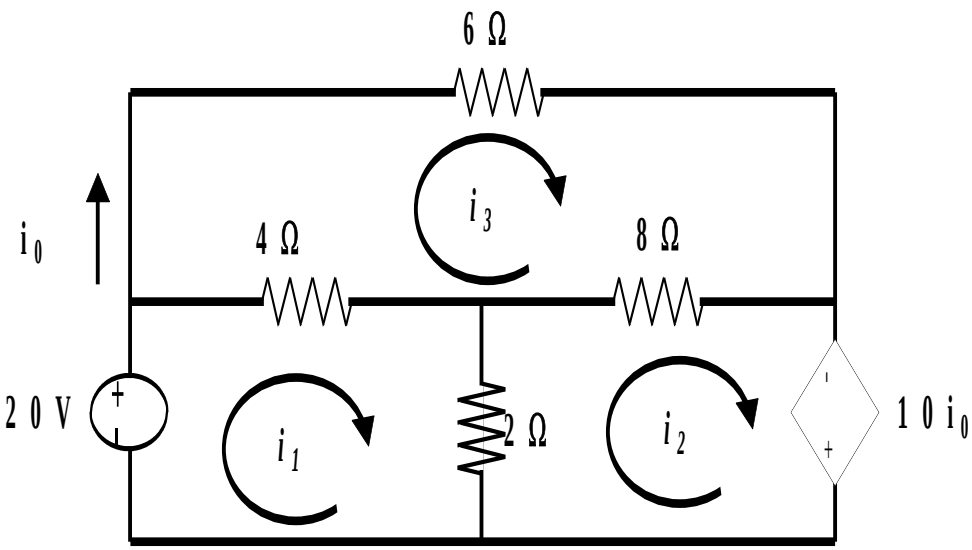

Solve

$$\begin{bmatrix} 6 & -2 & -4 \\ -2 & 10 & -18 \\ -4 & -8 & 18 \end{bmatrix} \begin{bmatrix} i_1 \\ i_2 \\ i_3 \end{bmatrix} = \begin{bmatrix} 20 \\ 0 \\ 0 \end{bmatrix}$$

$$\overleftrightarrow{R} \bullet \vec{I} = \vec{V}$$

$$\vec{I} = \overleftrightarrow{R}^{-1} \bullet \vec{V}$$

$$\begin{bmatrix} i_1 \\ i_2 \\ i_3 \end{bmatrix} = \begin{bmatrix} -(45/14) \\ -(135/14) \\ -5 \end{bmatrix} A = \begin{bmatrix} -3.2143 \\ -9.6429 \\ -5 \end{bmatrix} A$$

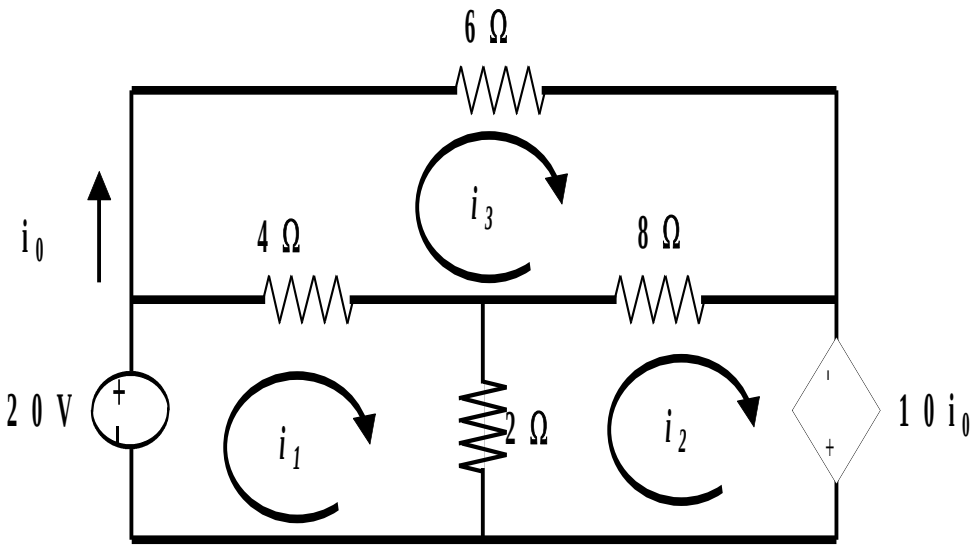

Check

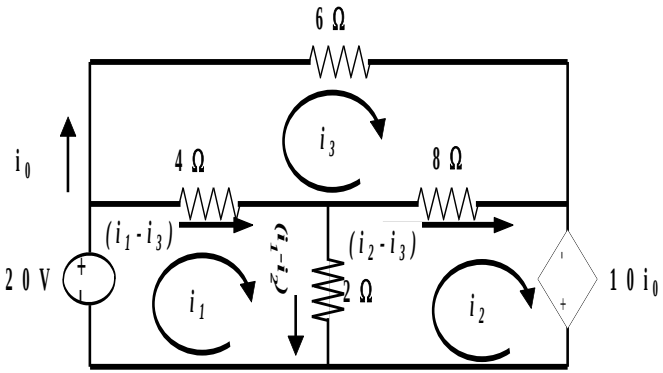

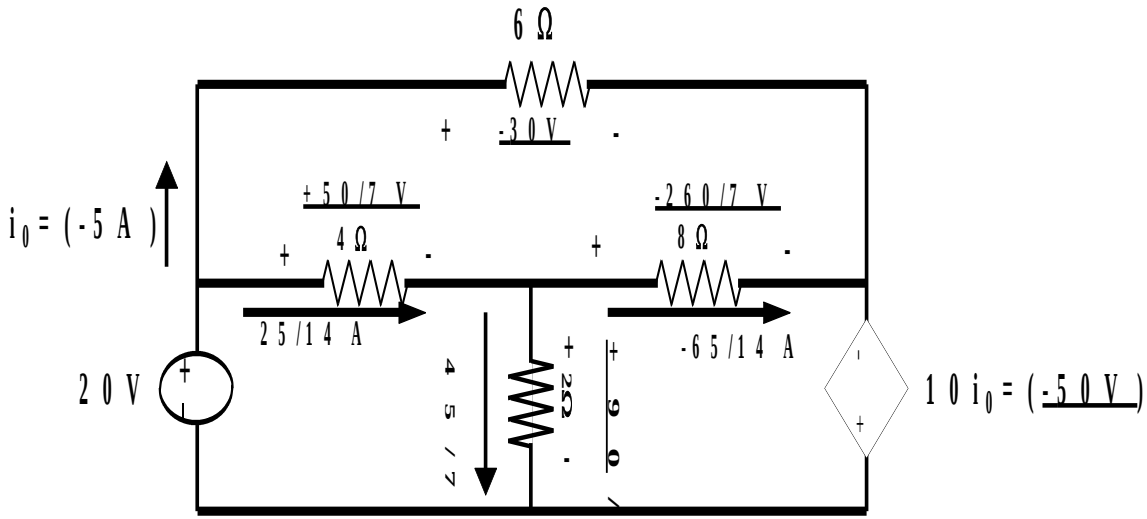

Confirm for yourself from above that ALL KVL LOOPS work

Also, there is only 1 node where you can check KCL (which?) and it works too.

Mesh Analysis vs. Nodal

- Nodal Analysis
  - Node Voltages (voltage difference between each node and ground reference) are *UNKNOWNS*
  - KCL Equations at Each *UNKNOWN* Node Constrain Solutions (N KCL equations for N Node Voltages)
- Mesh Analysis
  - "Mesh Currents" Following in Each Mesh Loop are *UNKNOWNS*
  - KVL Equations for Each Mesh Loop Constrain Solutions (M KVL equations for M Mesh Loops)

Last Example Easier with Nodal

$$V_1 = 20V$$

$$V_3 = -10i_0$$

$$i_0 = \left[\frac{V_1 - V_3}{6\Omega}\right] = \left[\frac{20V + 10i_0}{6\Omega}\right] \rightarrow i_0 = -5A \rightarrow V_3 = +50V$$

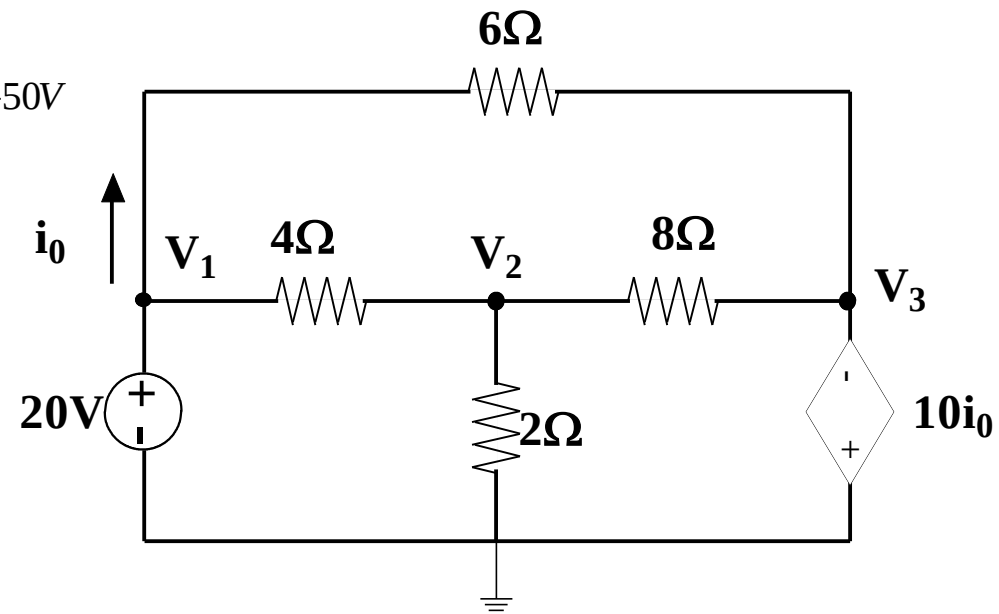

Only 1 KCL Equation to Write:

$$V_2\left[\frac{1}{4\Omega} + \frac{1}{8\Omega} + \frac{1}{2\Omega}\right] = \left[\frac{20V}{4\Omega} + \frac{50V}{8\Omega}\right]$$

$$V_2 = \frac{90}{7}V \approx 12.857V$$

Mesh Analysis with Current Sources

- Generalized Mesh Analysis
  - Include an unknown voltage drop for each current source
  - Write one KCL equation for each currents source
  - Solve for all mesh currents and current source voltage drops
- More Elegant Approach: Mesh Analysis with Current Sources Also Yield 2 special cases
  - Current source not on a boundary between 2 meshes ⇒eliminates 1 mesh current as unknown
  - Current source ON a boundary between 2 meshes ⇒*Super-mesh*/eliminates 1 mesh current as unknown and reduces number of KVL equations by 1
- Nodal Analysis with Voltage Sources Yields 2 special cases
  - V-source to ground⇒Eliminates one node voltage as unknown
  - V-source between 2 non-reference nodes ⇒*Super-node*/eliminates 1 node voltage as unknown and reduces number of KCL equations by 1

Generalized Mesh Analysis Example

Loop 1 KVL:

$$-20V + 6\Omega i_1 + 2\Omega\left(i_1 - i_2\right) + V_s = 0$$

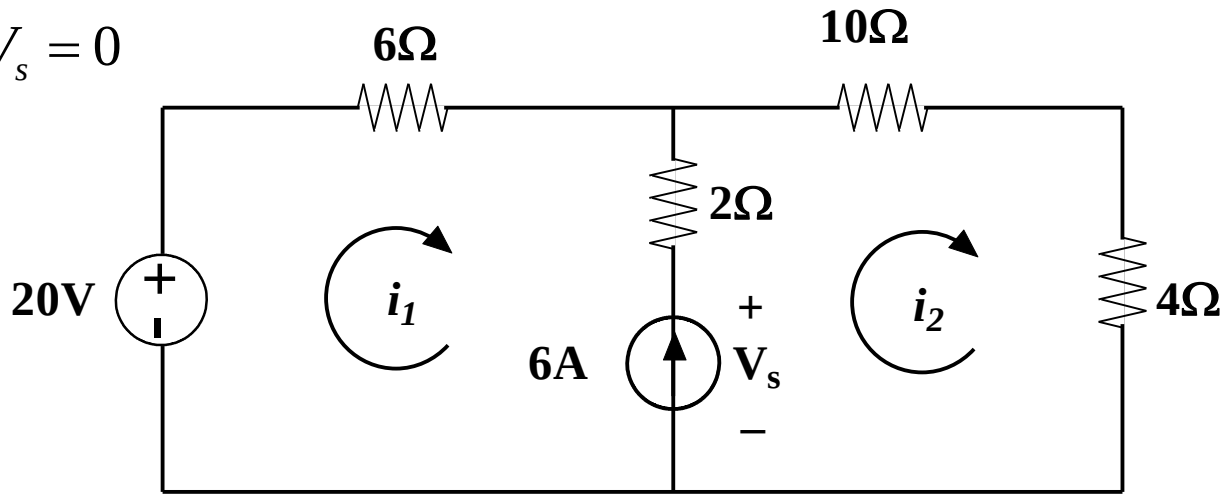

Current Source KCL:

$$\left(i_2 - i_1\right) = 6A$$

Loop 2 KVL:

$$-V_s + 2\Omega\left(i_2 - i_1\right) + \left(10\Omega + 4\Omega\right) i_2 = 0$$

Generalized Mesh Analysis Example

$$-20V + 6\Omega i_1 + 2\Omega\left(i_1 - i_2\right) + V_s = 0$$

$$-V_s + 2\Omega\left(i_2 - i_1\right) + \left(10\Omega + 4\Omega\right) i_2 = 0$$

$$\left(i_2 - i_1\right) = 6A$$

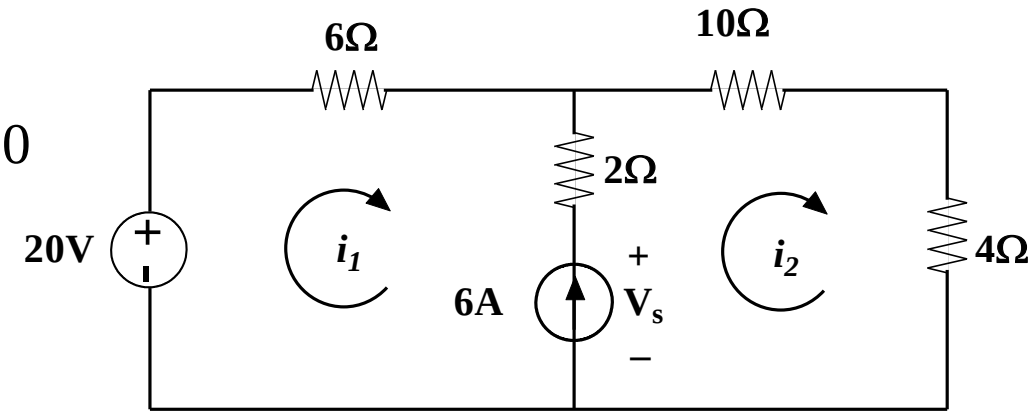

$$\left(8\Omega\right) i_1 + \left(-2\Omega\right) i_2 + V_s = 20V$$

$$\left(-2\Omega\right) i_1 + \left(16\Omega\right) i_2 - V_s = 0V$$

$$\left(-1\right) i_1 + \left(1\right) i_2 = 6A$$

$$\begin{bmatrix} 8\Omega & -2\Omega & 1 \\ -2\Omega & 16\Omega & -1 \\ -1 & 1 & 0 \end{bmatrix} \begin{bmatrix} i_1 \\ i_2 \\ V_s \end{bmatrix} = \begin{bmatrix} 20V \\ 0V \\ 6A \end{bmatrix}$$

$$\begin{bmatrix} i_1 \\ i_2 \\ V_s \end{bmatrix} = \begin{bmatrix} -3.2A \\ +2.8A \\ 51.2V \end{bmatrix}$$

Current source NOT on a boundary

- Find i_0 using mesh analysis

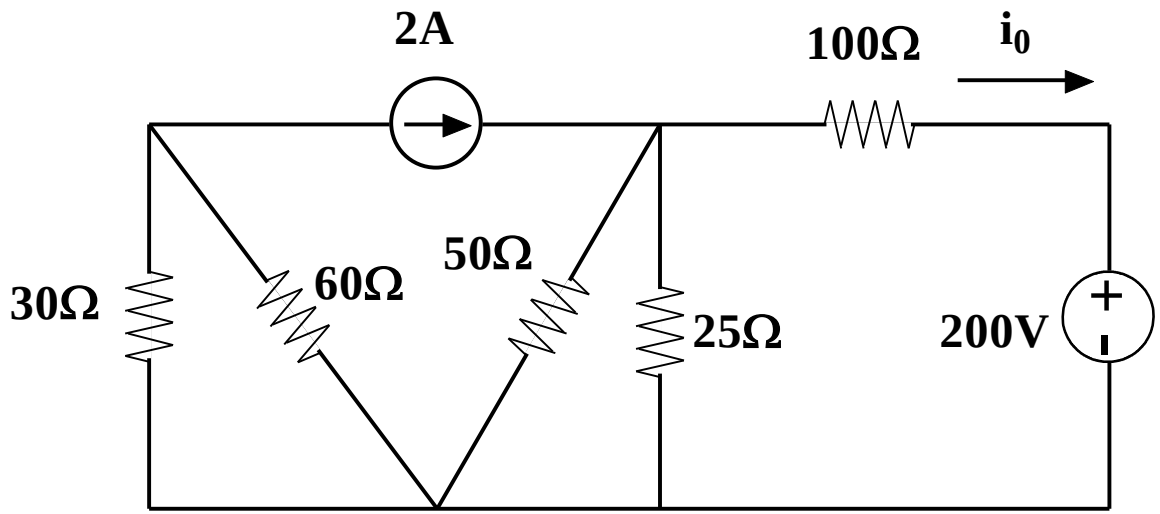

Current Source Example

- Reduce the number of useless loops by series/parallel combinations
- Label mesh currents

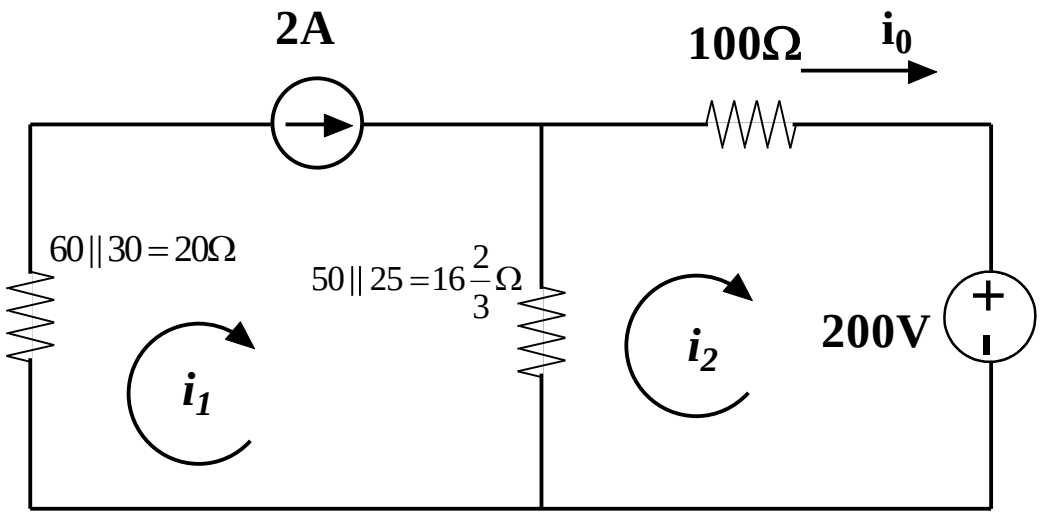

Solve

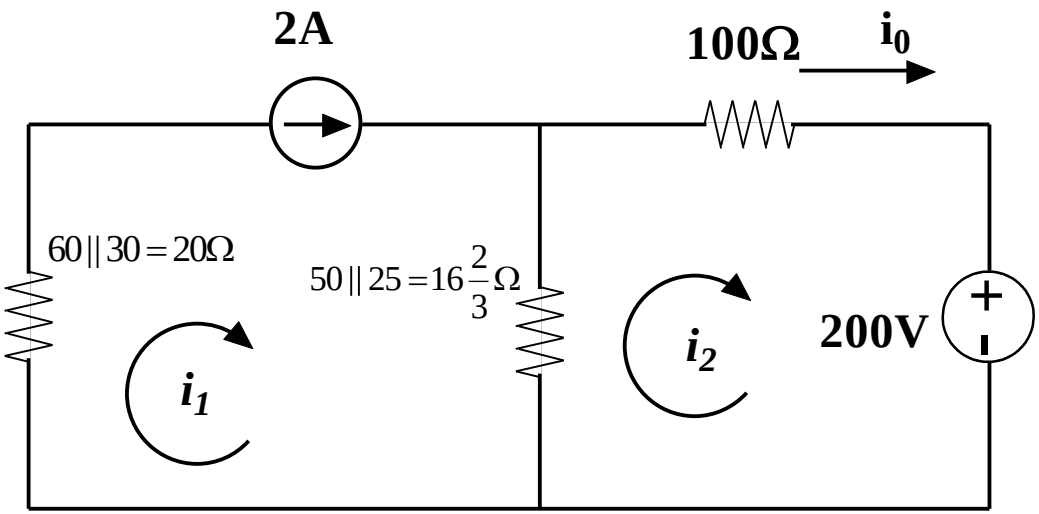

Solve

- ONLY 1 KVL Equation to WRITE

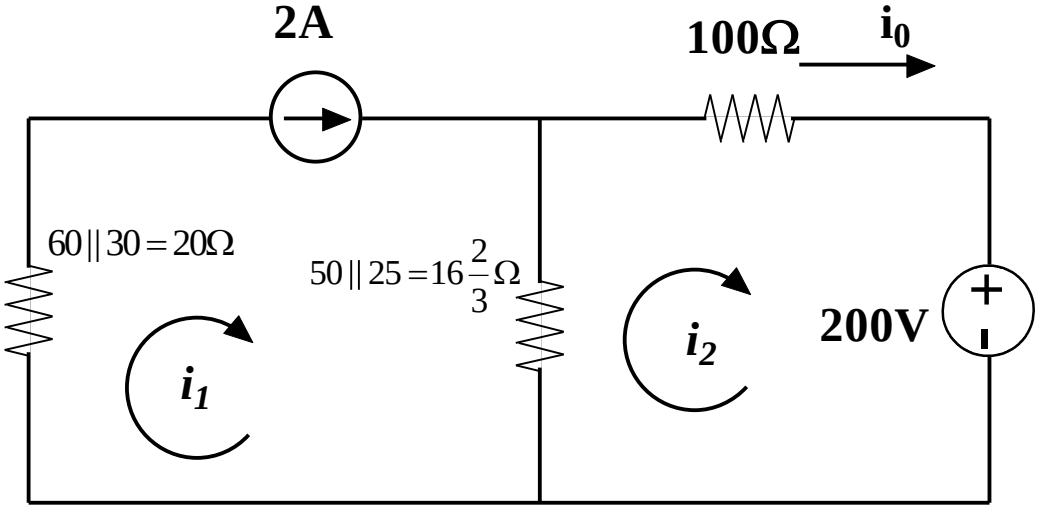

$$i_1 = 2A$$

KVL Loop 2:

$$\left(16\frac{2}{3}\Omega\right)(i_2 - i_1) + (100\Omega)i_2 + 200V = 0$$

$$\left(16\frac{2}{3}\Omega\right)(i_2 - 2A) + (100\Omega)i_2 + 200V = 0$$

$$\Rightarrow$$

$$i_2 = i_0 = -\frac{10}{7}A \approx -1.429A$$

Current Source on Boundary Between Loops: Supermesh

- Find Mesh Currents i_1 and i_2
- Note that i_1 and i_2 are NOT INDEPENDENT

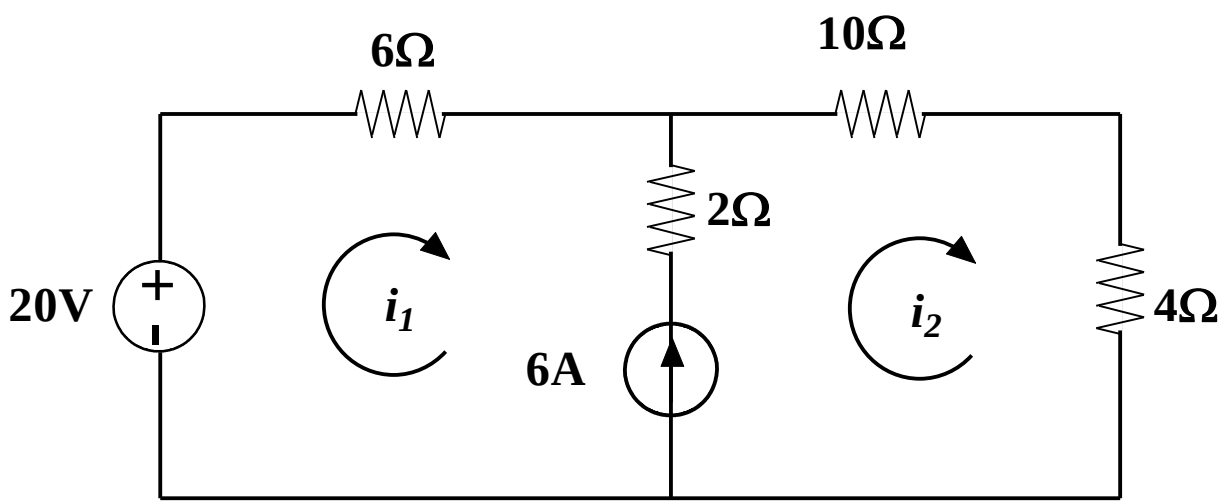

$$\left(i_2 - i_1\right) = 6A$$

KVL: Easy Way/Super-Mesh

- Just do 1 KVL Loop Around the <u>*Super-Mesh*</u> Created by the the 2 Mesh Loops Joined Together by the Boundary Current Source

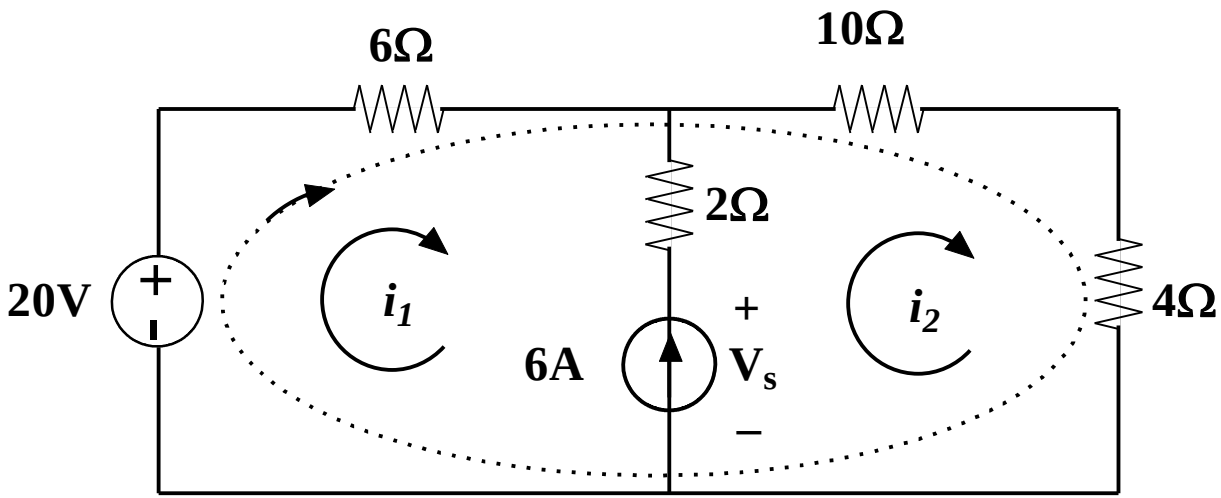

KVL: Easy Way/Super-Mesh

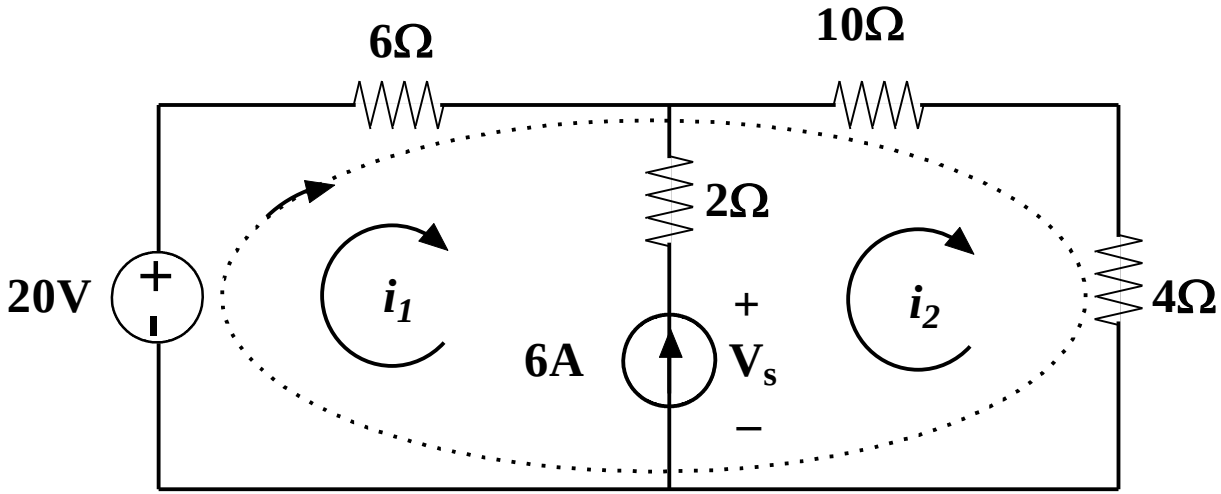

KVL: Easy Way/Super-Mesh

$$-20V + i_1(6\Omega) + (10\Omega + 4\Omega)i_2 = 0$$

$$(i_2 - i_1) = 6A \Rightarrow i_2 = i_1 + 6A$$

$$i_1(6\Omega) + (14\Omega)(i_1 + 6A) = 20V$$

$$(20\Omega)i_1 = -64V$$

$$i_1 = -3.2A \Rightarrow i_2 = +2.8A$$

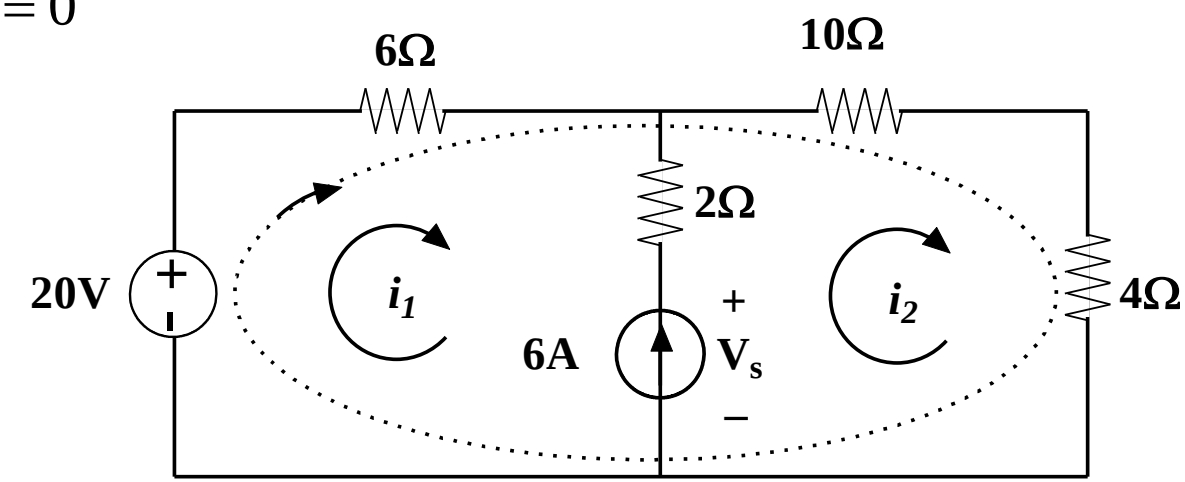

1 KVL Equation Around Combined Super-Mesh

Finding V_s is not needed in order to find Mesh Currents. We can find V_s once mesh currents are known from KVL

Nodal Analysis of Super-Mesh Problem

Technically we have 3 nodes to solve for.
However:
$(V_3-V_1)=(2\Omega*6A)=12V$ by KCL&Ohm's Law
And by resistive voltage divider:

$$V_2=\left[\frac{4\Omega}{4\Omega+10\Omega}\right]V_1$$

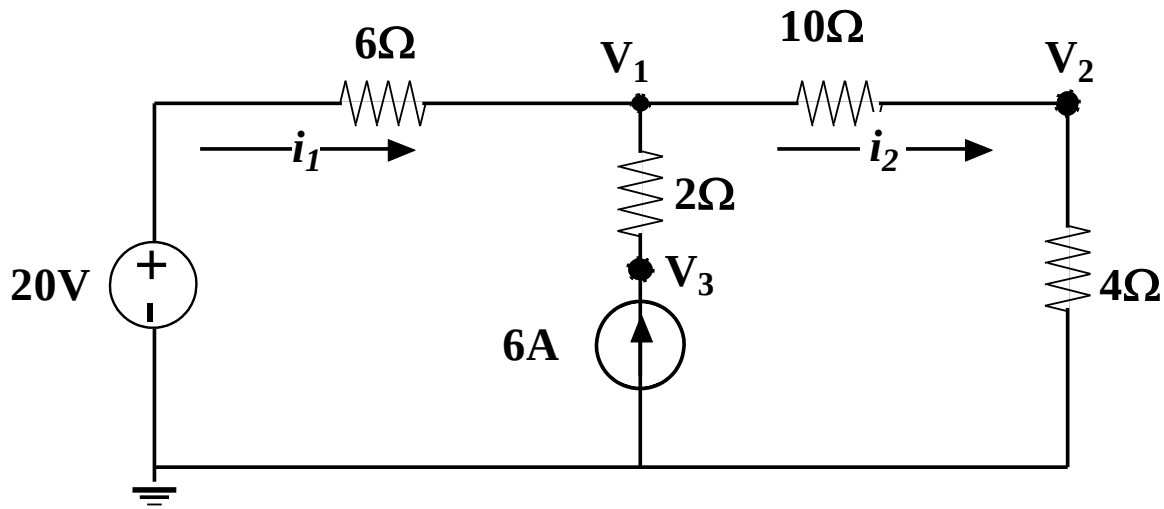

So only 1 "real" KCL equation to write

$$\left[\frac{20V-V_1}{6\Omega}\right]+6A=\left[\frac{V_1}{14\Omega}\right]\rightarrow V_1=+39.2V$$

$$i_1=\left[\frac{20V-V_1}{6\Omega}\right]=-3.2A$$

$$i_2=\left[\frac{V_1}{14\Omega}\right]=+2.8A=\left[6A-i_1\right]$$

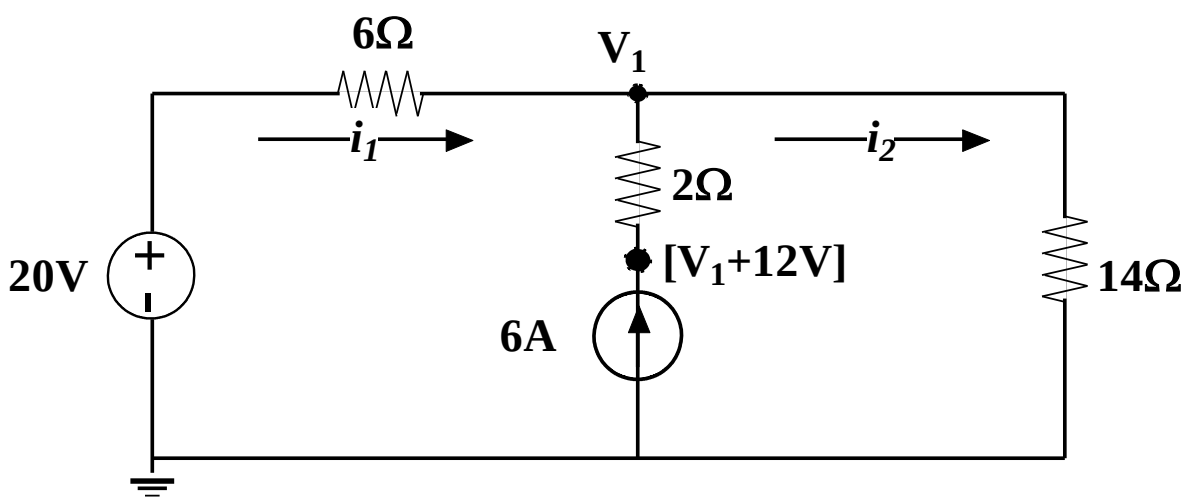

Mesh Analysis Example

- Object: Find V_{ab}

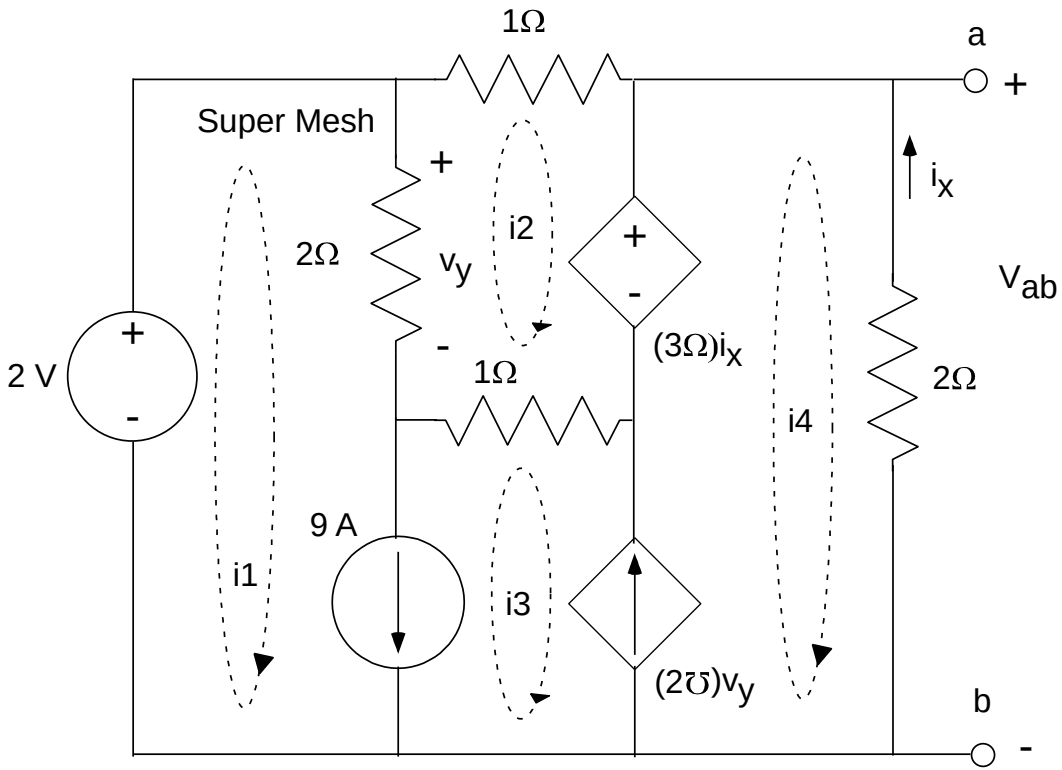

Mesh Analysis Example: Workpages

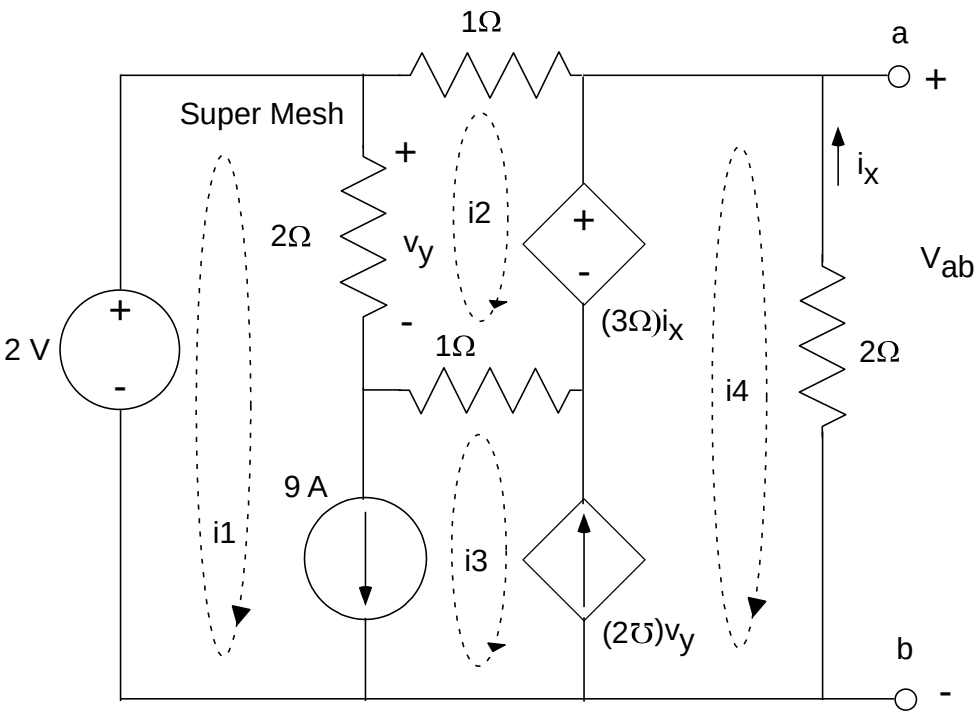

Mesh Analysis Example: Workpages

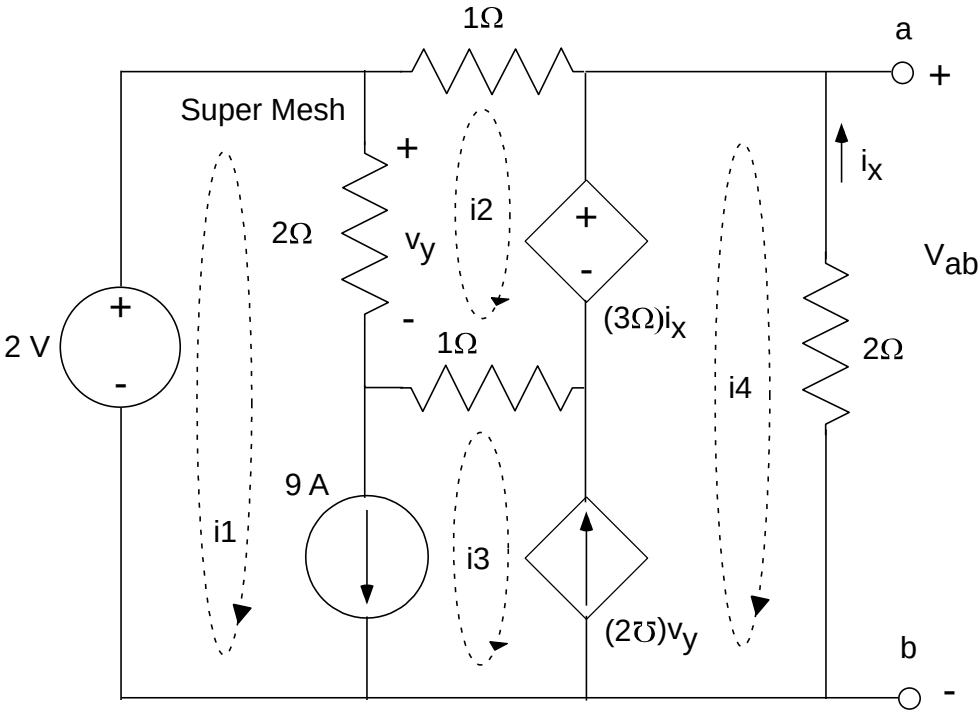

Mesh Analysis Example: Workpages

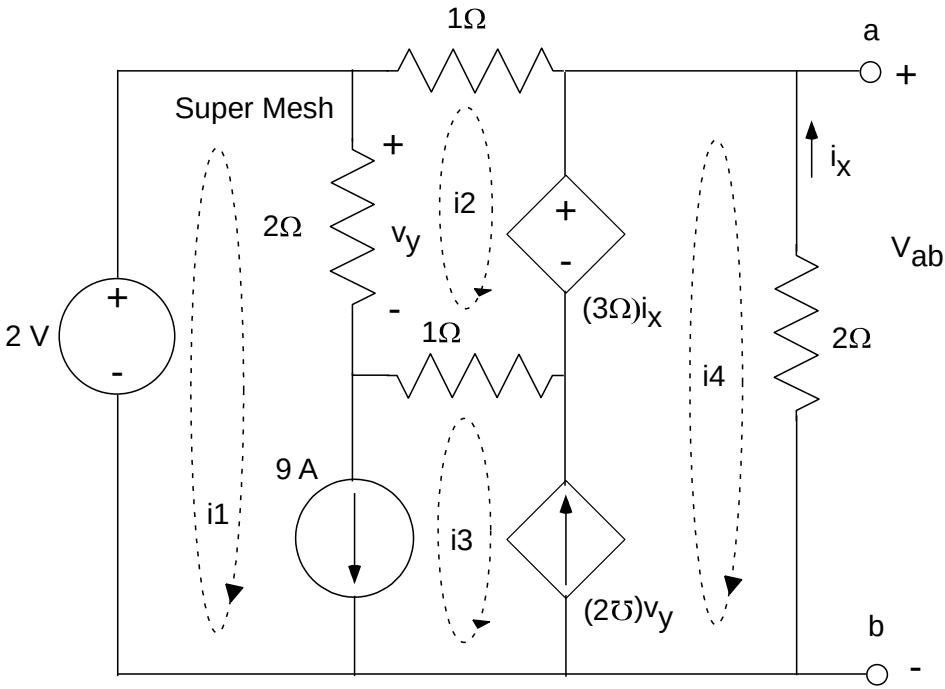

Mesh Analysis Example

- Label Mesh Loops 1-4
- Note that 1-3-4 forms a
- Note that $V_{ab}=i_4(2\Omega)$

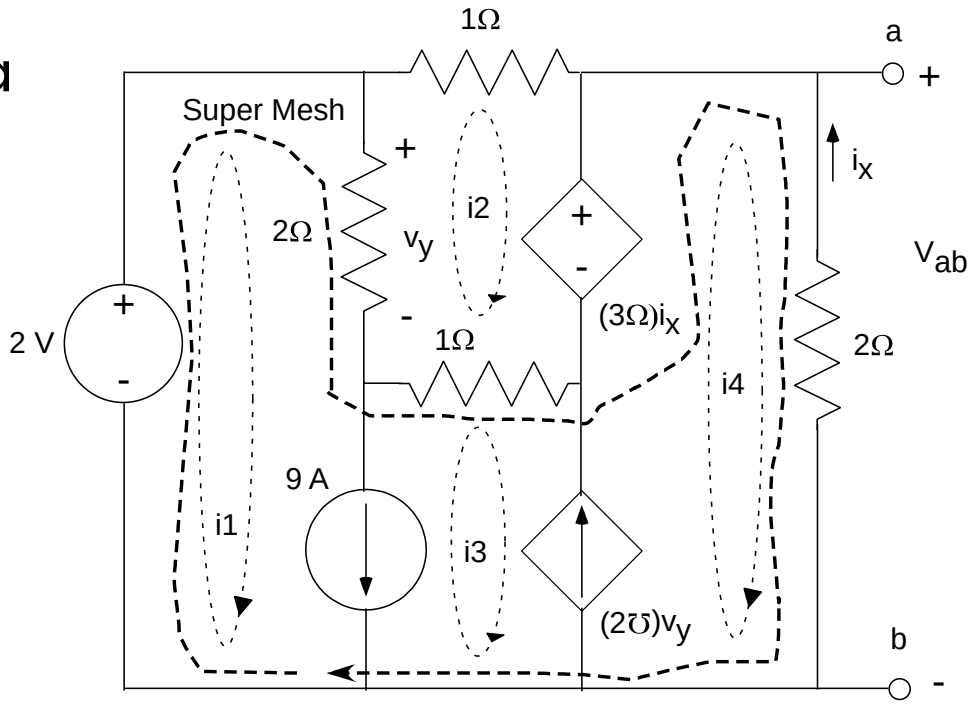

Mesh Analysis 2

- Write KVL Equations
  - KVL at SM:

$$(2\Omega)(i_1 - i_2) + (1\Omega)(i_3 - i_2) - (3\Omega)i_x + (2\Omega)i_4 = 2V$$

  - KVL at Mesh 2:

$$(1\Omega)(i_2 - i_3) + (2\Omega)(i_2 - i_1) + (1\Omega)(i_2) + 3i_x = 0$$

- Conditions on Dependent Sources

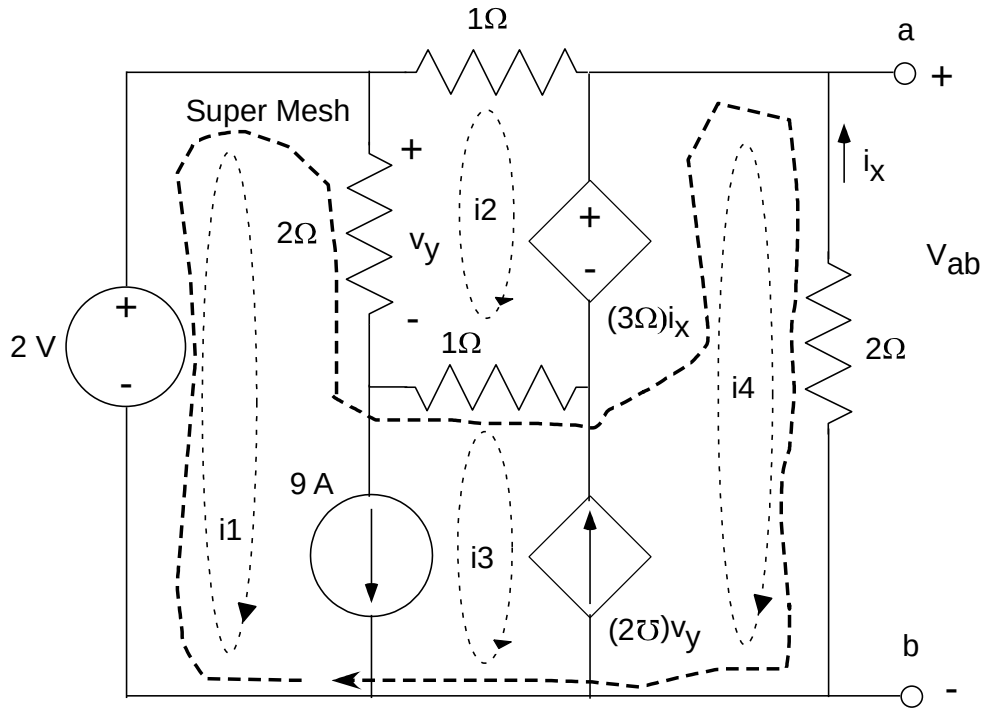

$$i_x = -i_4$$
$$(i_1 - i_3) = 9A \Rightarrow i_3 = i_1 - 9A$$
$$v_y = 2\Omega(i_1 - i_2)$$
$$(i_4 - i_3) = 2v_y = 4(i_1 - i_2) \Rightarrow i_4 = 4i_1 - 4i_2 + i_3 = 5i_1 - 4i_2 - 9A$$

Mesh Analysis 3

- Insert Dependent Source Condition Equations into KVL equations
  - SM:

$$\boxed{\begin{aligned}&2=2i_1-2i_2+\left(i_1-9-i_2\right)+5\left(5i_1-4i_2-9\right)\\&\Rightarrow 56=28i_1-23i_2\end{aligned}}$$

  - Mesh 2:

$$\boxed{\begin{aligned}&-2i_1+4i_2-\left(i_1-9\right)-3\left(5i_1-4i_2-9\right)=0\\&\Rightarrow -18i_1+16i_2=-36\end{aligned}}$$

- Solve for i_1,i_2

$$\boxed{\begin{aligned}&\begin{bmatrix}-18 & 16\\ 28 & -23\end{bmatrix}\begin{bmatrix}i_1\\ i_2\end{bmatrix}=\begin{bmatrix}-36\\ 56\end{bmatrix}\\&\Rightarrow\begin{bmatrix}i_1\\ i_2\end{bmatrix}=\begin{bmatrix}+2A\\ 0A\end{bmatrix}\Rightarrow i_3=-7A, i_4=+1A\\&\Rightarrow V_{ab}=\left(2\Omega\right)i_4=+2V\end{aligned}}$$