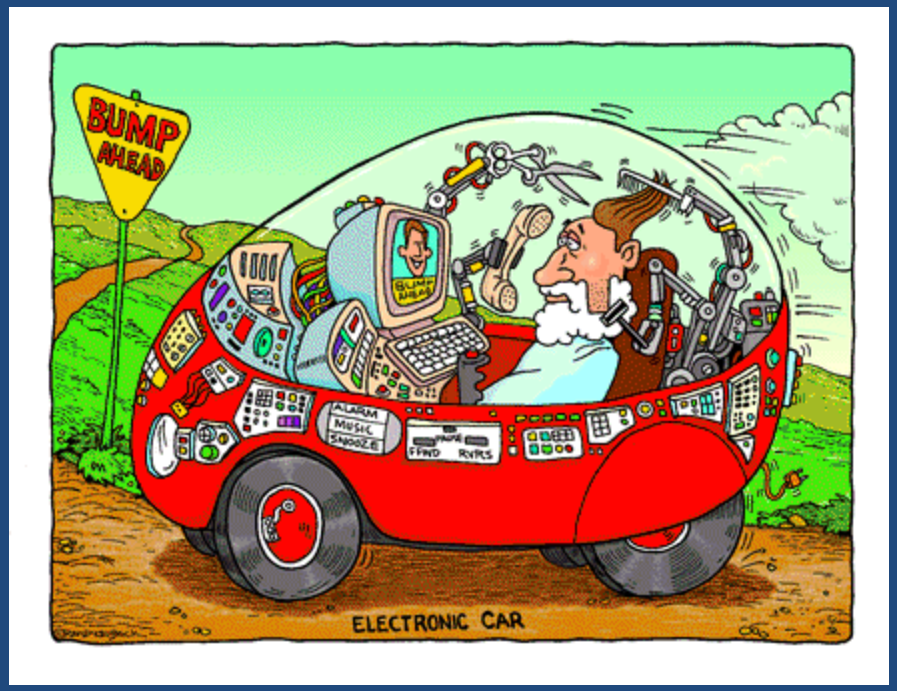

NETWORK THEOREMS II: THEVENIN/NORTON EXAMPLES, MAXIMUM POWER TRANSFER THEOREM, TWO PORT NETWORKS

© Fred Terry

Fall, 2013

Messy Example

- Suppose we have our now familiar circuit but we add a Current Source load I_L and we want to know V_{ab}
- Currently, our only choice is to do Nodal analysis again considering the added load resistor

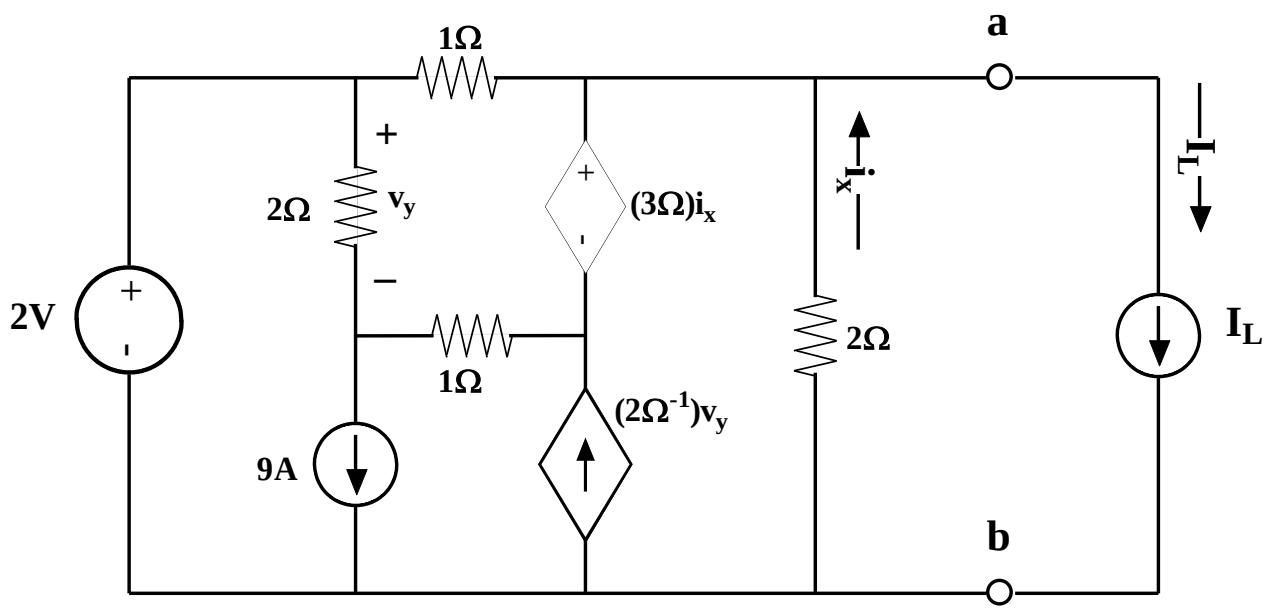

Brute Force Solution

As messy as this looks, since have already done a full, serious nodal analysis, it just adds at term to the 2-4 Super-node KCL:

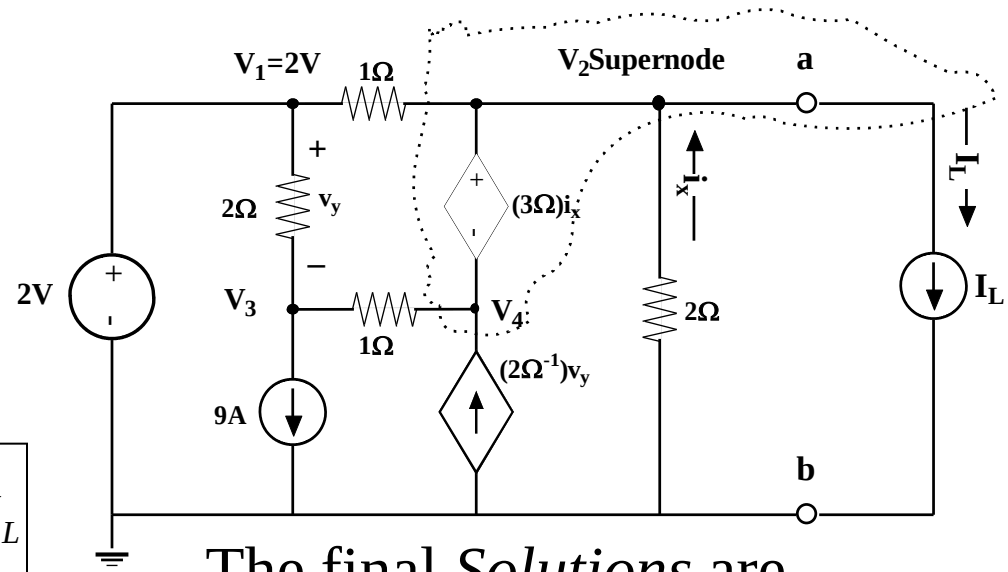

$$\frac{2V - v_2}{1\Omega} + \frac{v_3 - 2.5v_2}{1\Omega} + \left(-\frac{v_2}{2\Omega}\right) + 2\Omega^{-1}(2V - v_3) = I_L$$

$$\Rightarrow v_2\left[4\Omega^{-1}\right] + v_3\left[1\Omega^{-1}\right] = \left(6A - I_L\right)$$

The *Equation* for node 3 is unchanged :

$$\frac{2V - v_3}{2\Omega} + \frac{2.5v_2 - v_3}{1\Omega} = 9A$$

$$\Rightarrow v_2\left[2.5\Omega^{-1}\right] + v_3\left[-1.5\Omega^{-1}\right] = 8A$$

The final *Solutions* are changed:

$$\begin{bmatrix} 4\Omega^{-1} & 1\Omega^{-1} \\ 2.5\Omega^{-1} & -1.5\Omega^{-1} \end{bmatrix} \begin{bmatrix} v_2 \\ v_3 \end{bmatrix} = \begin{bmatrix} \left(6A - I_L\right) \\ 8A \end{bmatrix}$$

$$\Rightarrow \begin{bmatrix} v_2 \\ v_3 \end{bmatrix} = \begin{bmatrix} 2V - \left(\frac{3\Omega}{17}\right) I_L \\ -2V - \left(\frac{5\Omega}{17}\right) I_L \end{bmatrix}$$

Equivalent Circuits

So from the previous result, note that we get:

$$V_2 = V_{ab} = \left[2V - \left(\frac{3}{17}\Omega \right) I_L \right]$$

or

$$I_L = \left[\left(2V - V_{ab} \right) \Big/ \left(\frac{3}{17}\Omega \right) \right]$$

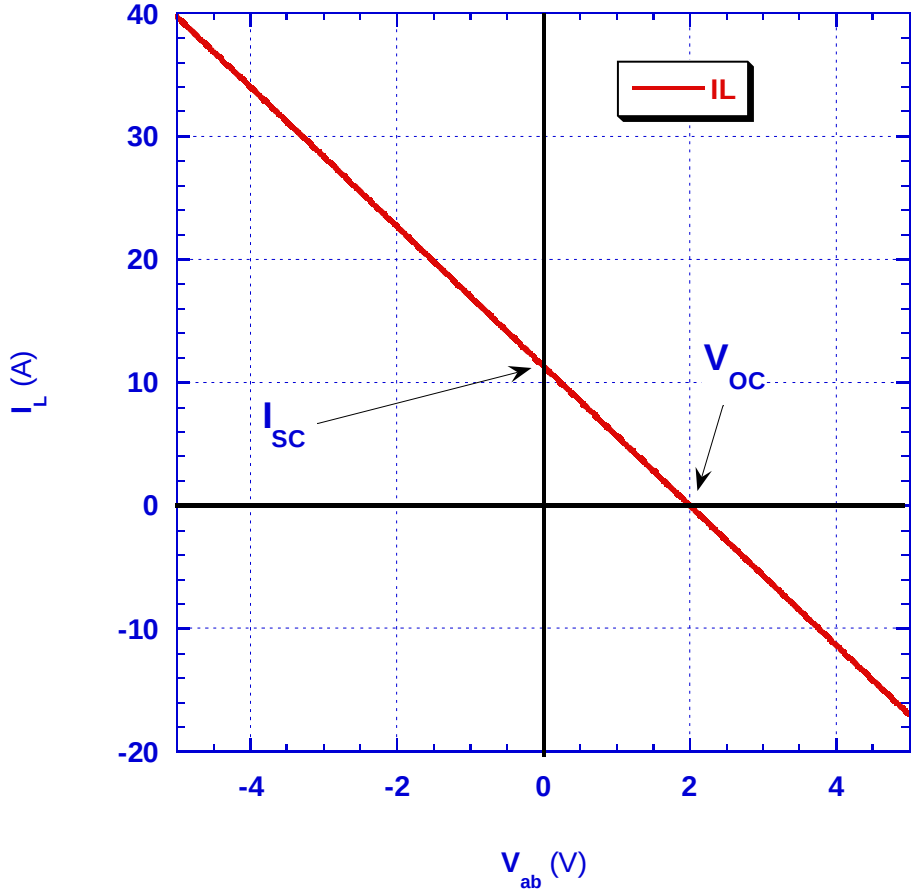

V_{ab} is Linear in I_L

Equivalently

I_L is Linear in V_{ab}

Picture for V_{TH} & R_{TH}

$$V_{ab} = \left[2V - \left(\frac{3}{17}\Omega \right) I_L \right] \qquad or \qquad I_L = \left[\left(2V - V_{ab} \right) \Big/ \left(\frac{3}{17}\Omega \right) \right]$$

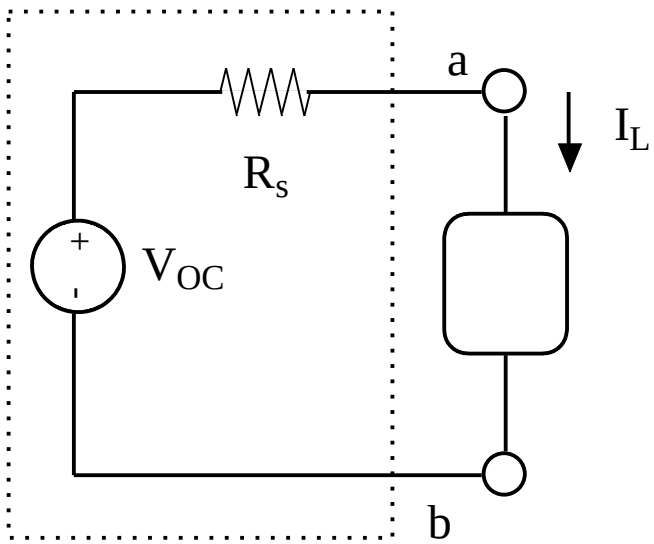

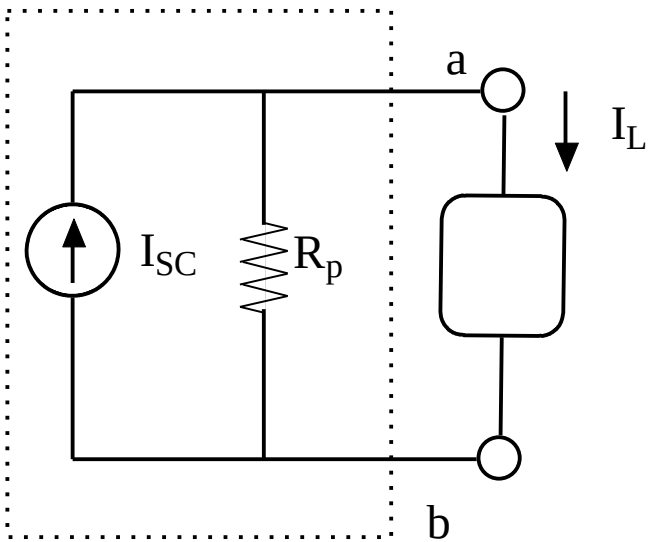

Equivalent Circuits

This I-V curve is generated by either of these two *equivalent* circuits which yield the same I-V at terminals a&b:

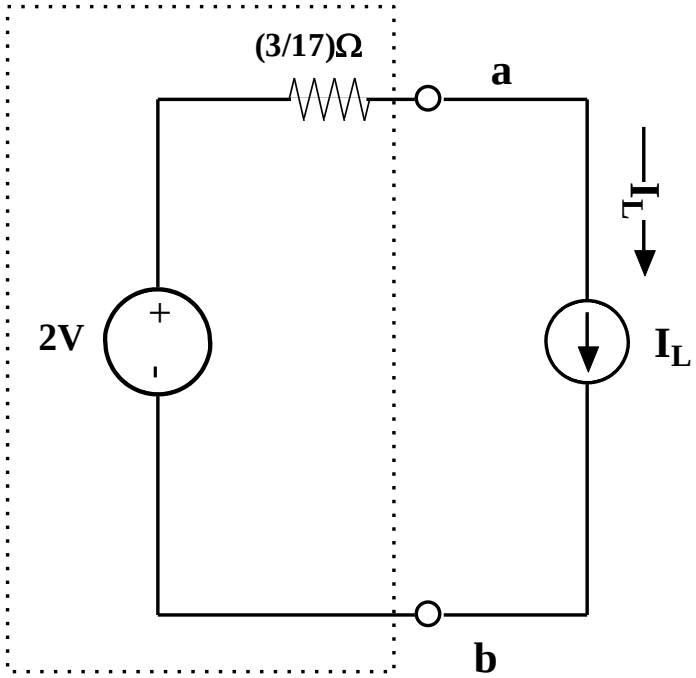

Thevenin Equivalent

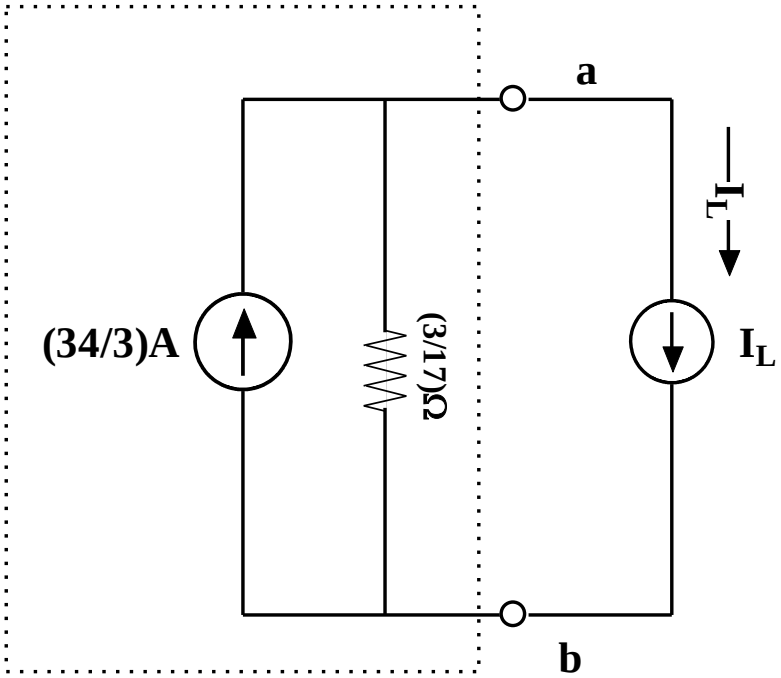

Norton Equivalent

Easier Way

- We already had V_{OC}=+2V from Nodal and Mesh Analysis of this Circuit
- Easier then if we just get R_{eq}

Original Circuit

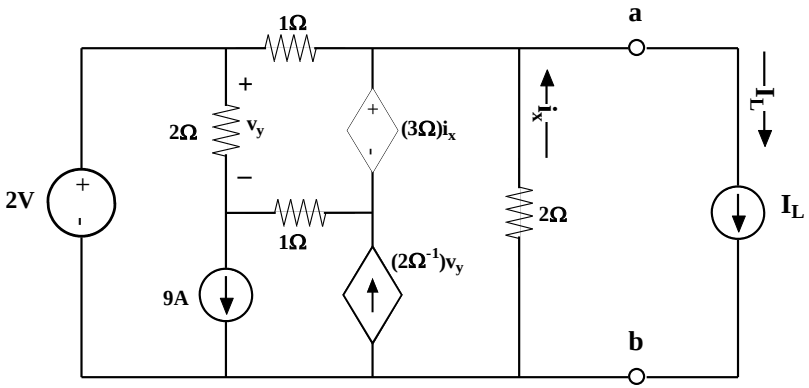

Independent Source off / Test Source Applied

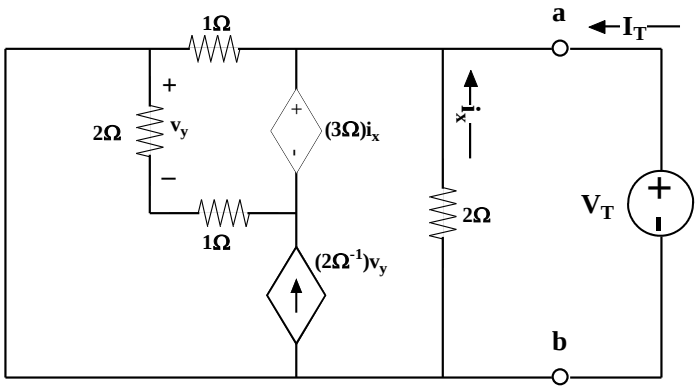

Req Analysis

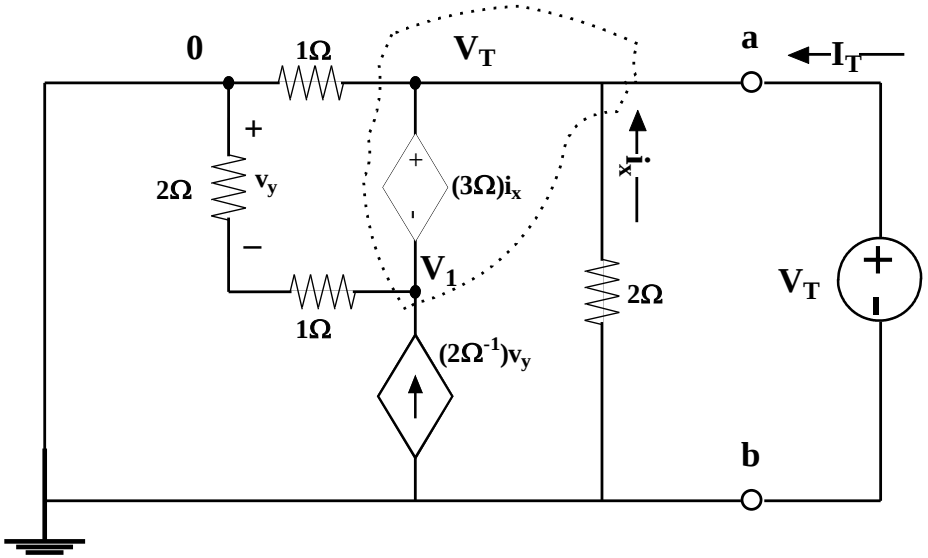

Req Analysis

$$i_x = -V_T / 2\Omega$$

$$\rightarrow 3\Omega i_x = -1.5V_T$$

$$\rightarrow V_1 = V_T - 3\Omega i_x = 2.5V_T$$

$$\rightarrow v_y = -\frac{2}{3}\left(2.5V_T\right) = -\frac{5}{3}V_T$$

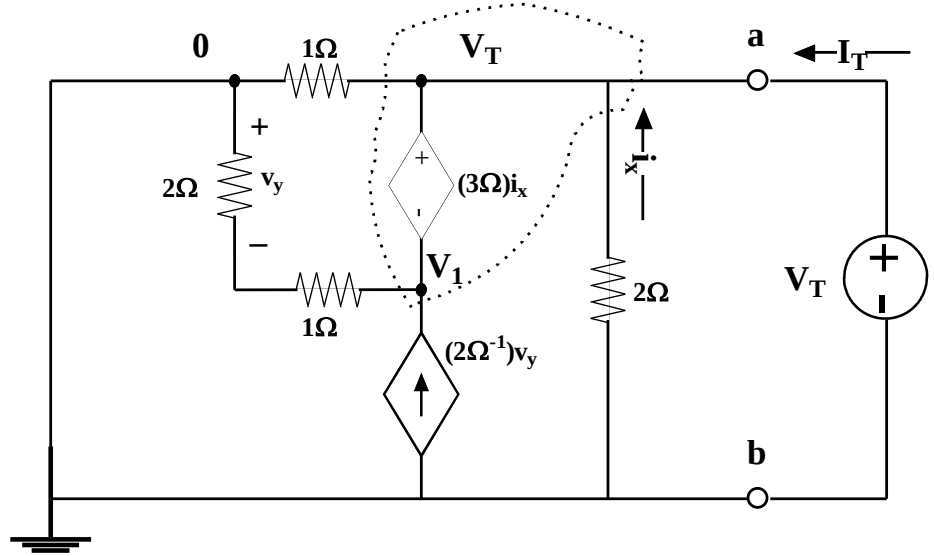

So Doing KCL on the Closed Surface Yields:

$$I_T = \left[\frac{V_T}{2\Omega} + \frac{V_T}{1\Omega} + \frac{2.5V_T}{3\Omega} - \left(2\Omega^{-1}\right)v_y\right]$$

$$= \left[\frac{V_T}{2\Omega} + \frac{V_T}{1\Omega} + \frac{2.5V_T}{3\Omega} + \frac{10V_T}{3\Omega}\right]$$

$$\rightarrow \mathrm{R}_{eq} = \left(V_T / I_T\right) = \frac{3}{17}\Omega$$

I-V Plots & Warning

- Req=V_T/I_T *ONLY* for reduced circuit (independent sources off)
- Trying test source procedure on full circuit will only give another point on complete I-V plot (and is a lot more work)

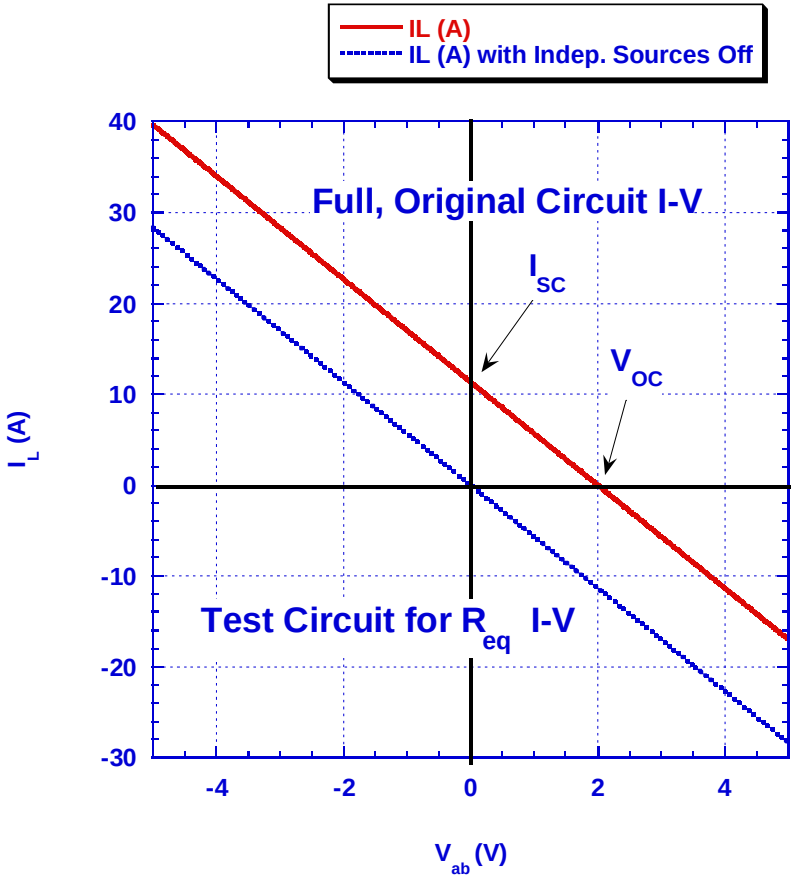

Utility of Equivalents Example: Connect 2 Circuits

Suppose we connected the 2 previously analyzed circuits at a&b

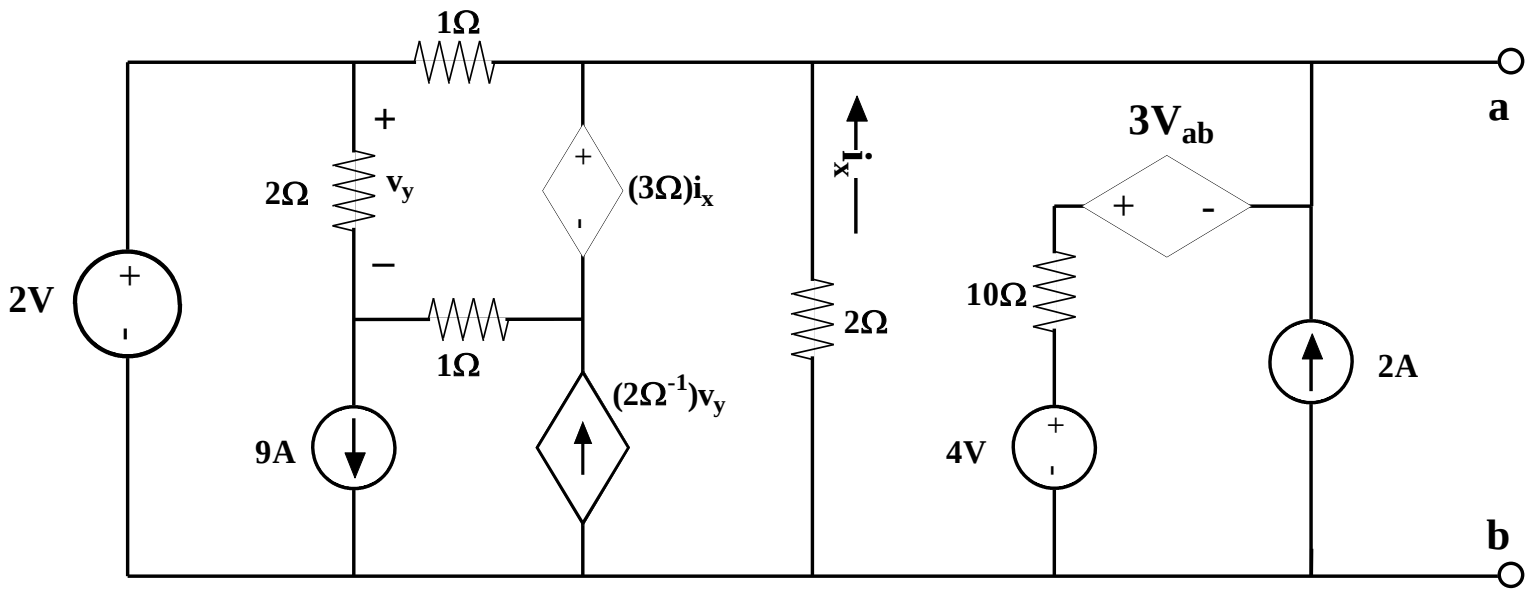

Don't Do a Big New Analysis!

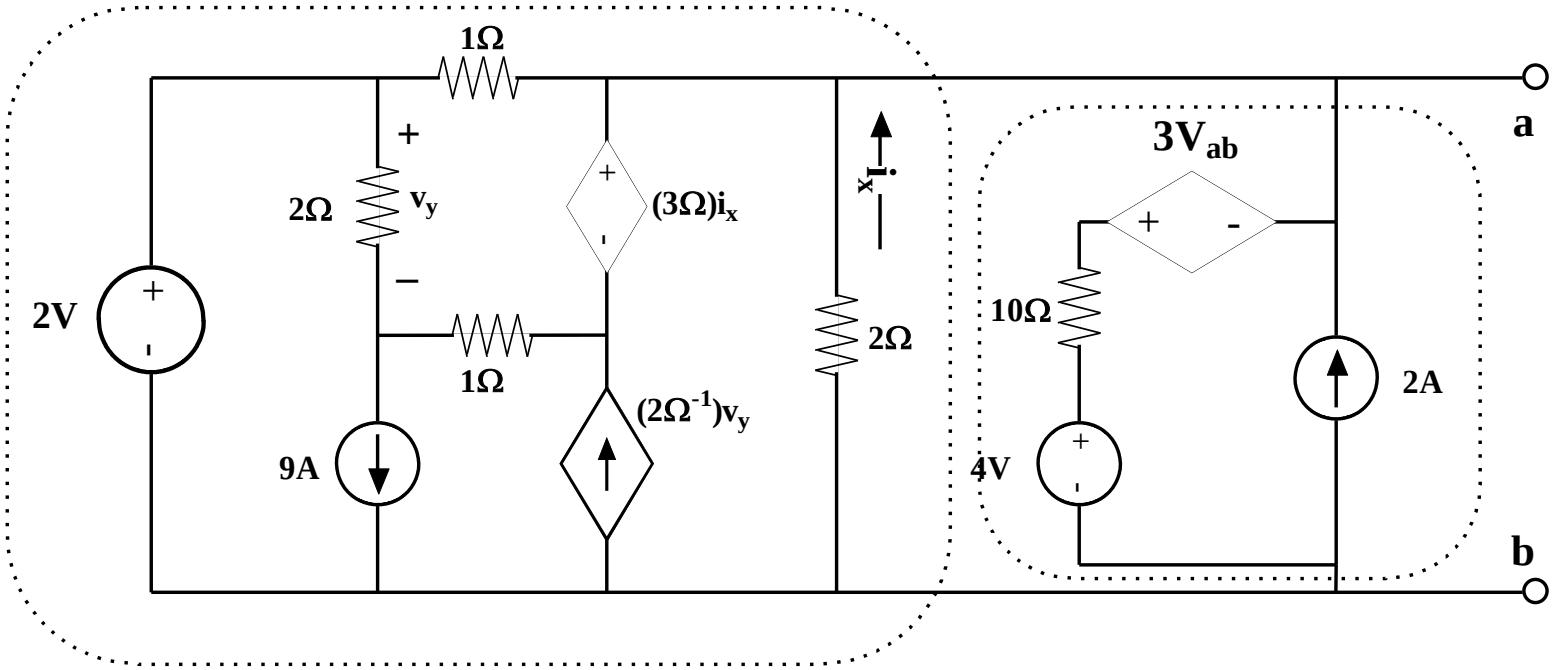

Replace with Equivalent Sub-Circuits

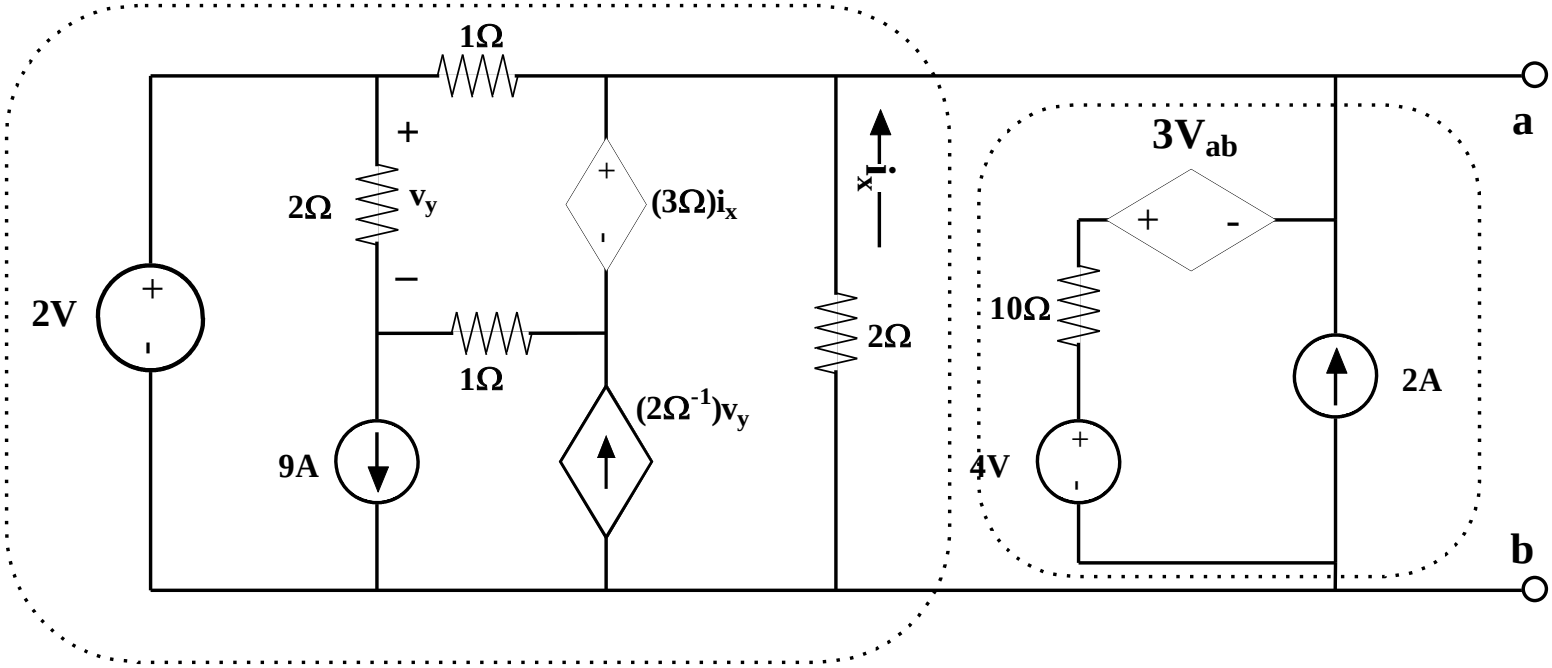
1Ω
2Ω
v_y
$(3\Omega)i_x$
i_x
2V
1Ω
9A
$(2\Omega^{-1})v_y$
2Ω
$3V_{ab}$
10Ω
2A
4V
a
b

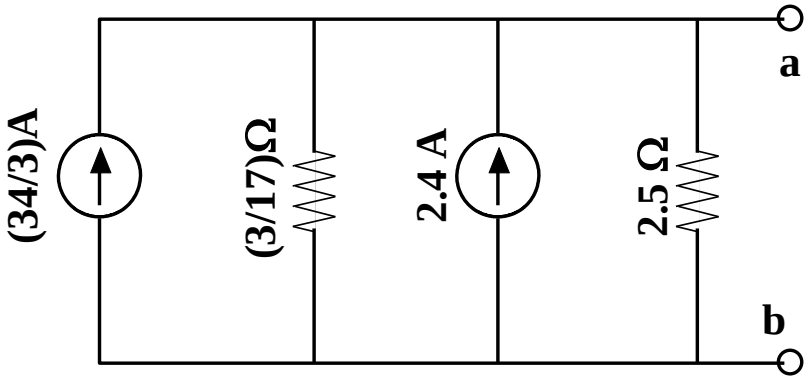
(34/3)A
(3/17)Ω
2.4 A
2.5 Ω
a
b

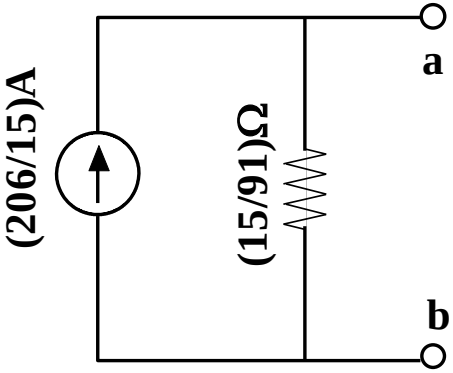
(206/15)A
(15/91)Ω
a
b

Norton and Thevenin Equivalents

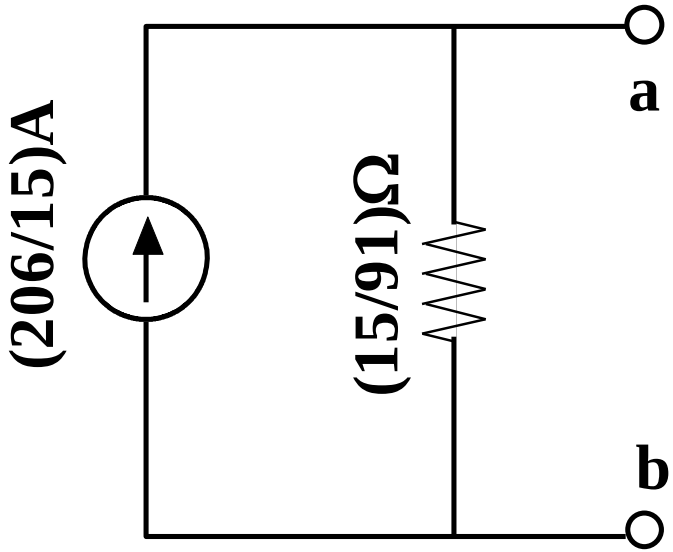

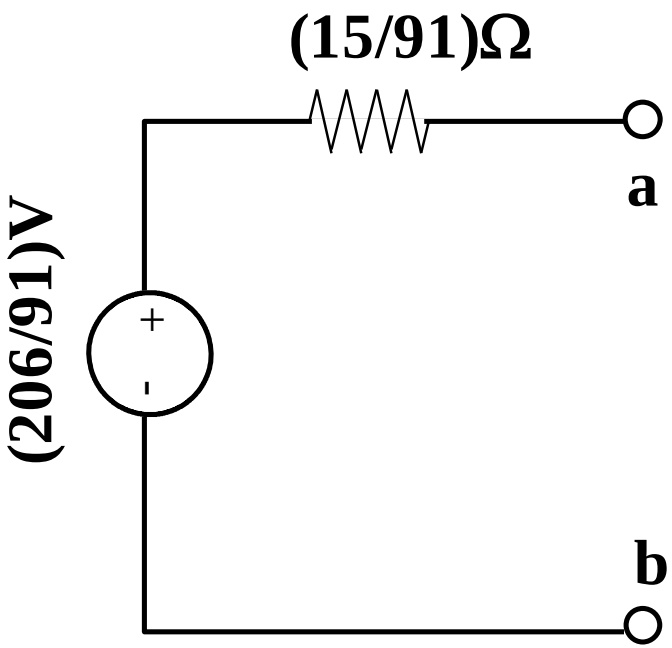

Question: what information is lost in the conversion to these equivalent circuits?

What About this One?

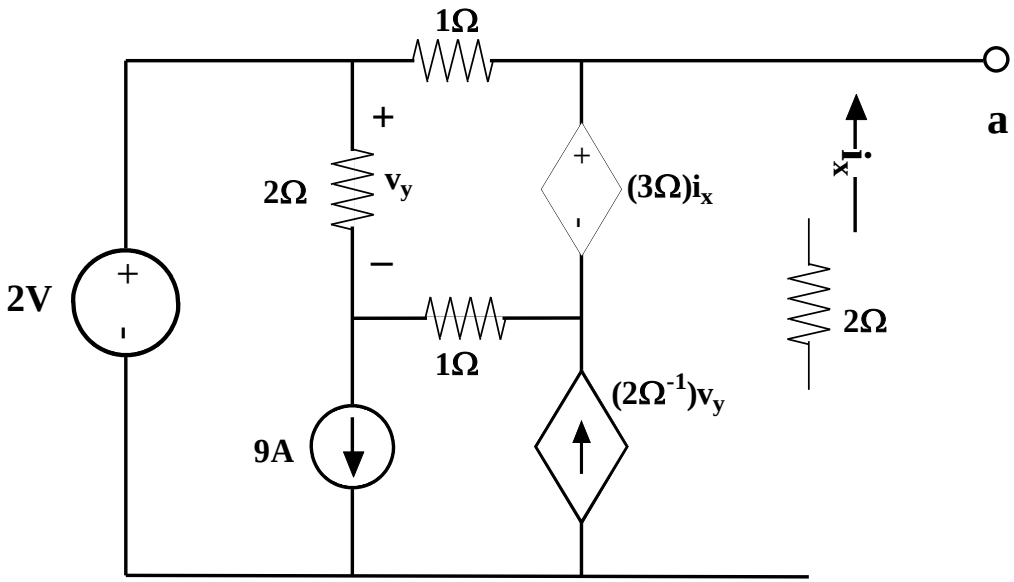

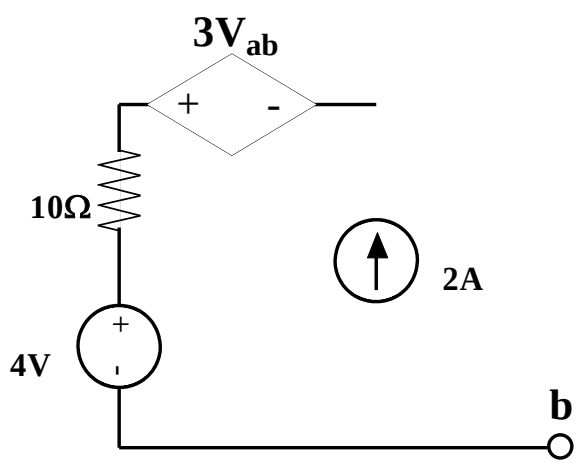

Extensions of Thevenin/Norton Idea: Concept of a Two-Port

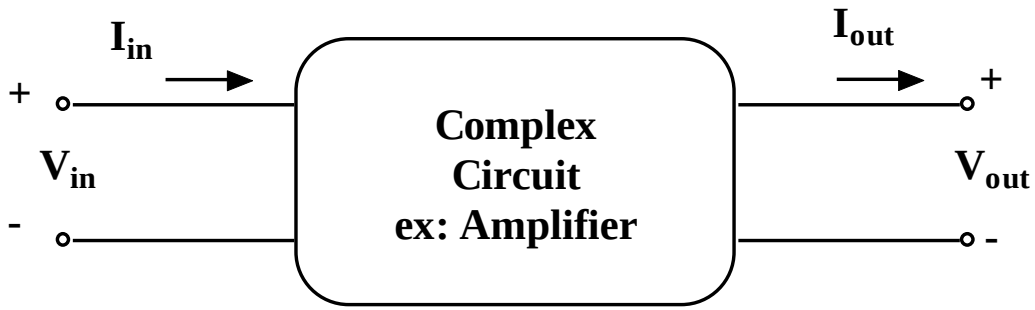

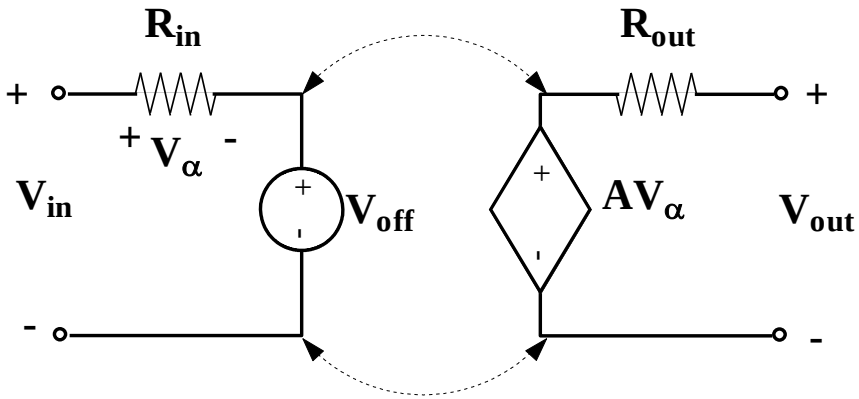

Extensions of Thevenin/Norton Idea: Two Port Networks

- Circuits with a pair of input terminals and a pair of output terminals are called "Two Port Networks" or "Two Ports" for Short
- Complex Circuits can be reduced to simpler equivalents using two port parameter definitions
- Very useful for analyzing amplifiers and signal processing circuits
- Different Definitions of parameters (h, g, y, z, s, etc.) for different types of problems
- We won't do this formally in 215, but I will show one useful example

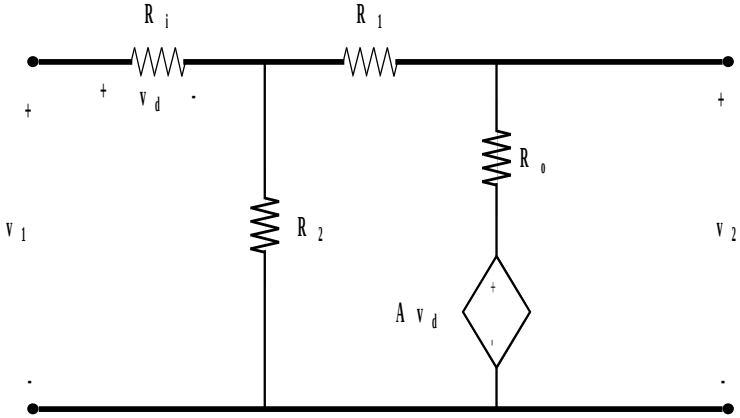

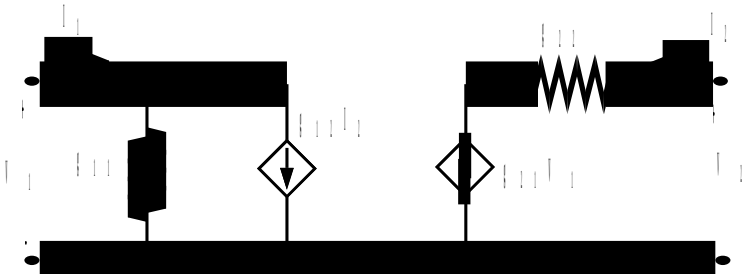

g-Parameters

- Inverse Hybrid (g) Parameters Are Often Used to Characterize Voltage Amplifiers

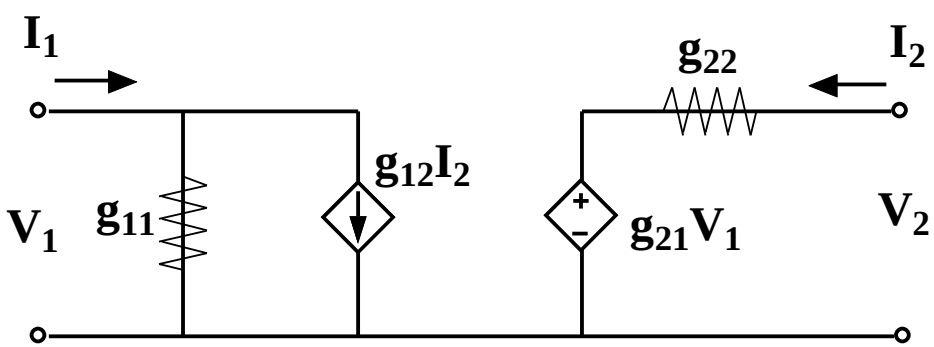

$$I_1 = g_{11}V_1 + g_{12}I_2$$

$$V_2 = g_{21}V_1 + g_{22}I_2$$

$$\begin{bmatrix} I_1 \\ V_2 \end{bmatrix} = \begin{bmatrix} g_{11} & g_{12} \\ g_{21} & g_{22} \end{bmatrix} \begin{bmatrix} V_1 \\ I_2 \end{bmatrix}$$

$1/g_{11}$ = Open Circuit Input Resistance
g_{12} = Short Circuit Reverse Current Gain
g_{21} = Open Circuit Forward Voltage Gain
g_{22} = Short Circuit Output Resistance

$$g_{11} = \left.\frac{I_1}{V_1}\right|_{I_2=0} \qquad g_{12} = \left.\frac{I_1}{I_2}\right|_{V_1=0}$$

$$g_{21} = \left.\frac{V_2}{V_1}\right|_{I_2=0} \qquad g_{22} = \left.\frac{V_2}{I_2}\right|_{V_1=0}$$

g-Parameters for Non-Inverting/Non-Ideal Op-Amp Circuit

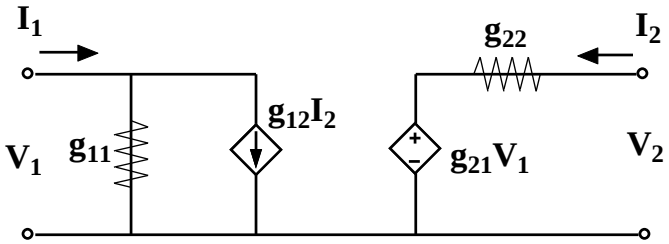

$$\left(\frac{1}{g_{11}}\right) = R_i + \frac{R_2\left(AR_i + R_1 + R_o\right)}{\left(R_1 + R_2 + R_o\right)}$$

$$= R_i\left(1 + A\frac{R_2}{\left(R_1 + R_2 + R_o\right)}\right) + \frac{R_2\left(R_1 + R_o\right)}{\left(R_1 + R_2 + R_o\right)}$$

$$g_{12} = -\frac{R_2 R_o}{R_i\left[\left(A+1\right)R_2 + R_1 + R_o\right] + R_2\left(R_1 + R_o\right)}$$

$$g_{21} = \frac{A\left(R_1 + R_2\right)R_i + R_2 R_o}{R_i\left[\left(A+1\right)R_2 + R_1 + R_o\right] + R_2\left(R_1 + R_o\right)} \rightarrow \frac{\left(R_1 + R_2\right)}{R_2} = \left(1 + \frac{R_1}{R_2}\right)$$

$$g_{22} = \frac{\left[R_i\left(R_1 + R_2\right) + R_1 R_2\right]R_o}{R_i\left[\left(A+1\right)R_2 + R_1 + R_o\right] + R_2\left(R_1 + R_o\right)} \rightarrow \frac{\left(R_1 + R_2\right)R_o}{\left[\left(A+1\right)R_2 + R_1 + R_o\right]}$$

$$\rightarrow \frac{1}{\left(A+1\right)}\left(1 + \frac{R_1}{R_2}\right)R_o$$

g-Parameters for Non-Inverting/Non-Ideal Op-Amp Circuit

Noninverting Amp with R_1=400KΩ and R_2=100KΩ

Typical 741 Specs $R_i \sim 2M\Omega \quad A \sim 2x10^5 \quad R_o \sim 75\Omega$

$$(1/g_{11}) = 7.99901x10^{10}\Omega \approx 80G\Omega$$

$$g_{12} = -1.87495x10^{-10} A/A \approx 187\, pA/A$$

$$g_{21} = 4.99987$$

$$g_{22} = 0.00194995\Omega \approx 1.95m\Omega$$

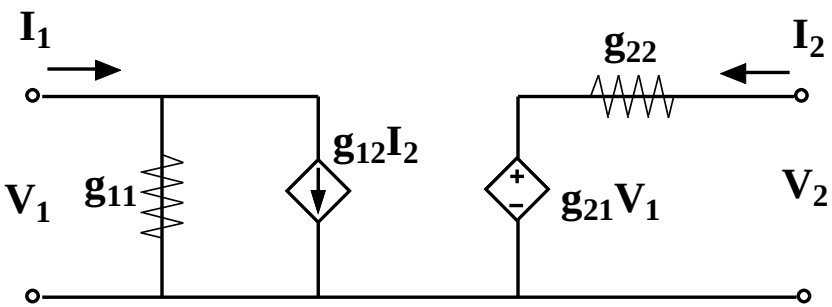

MAXIMUM POWER TRANSFER THEOREM

© Fred Terry
Fall, 2013

Motivation

- All "Real" Sources Have Output Resistance
- What Is the Maximum Amount of Power That Can Be Delivered From a Real Source to A Load?

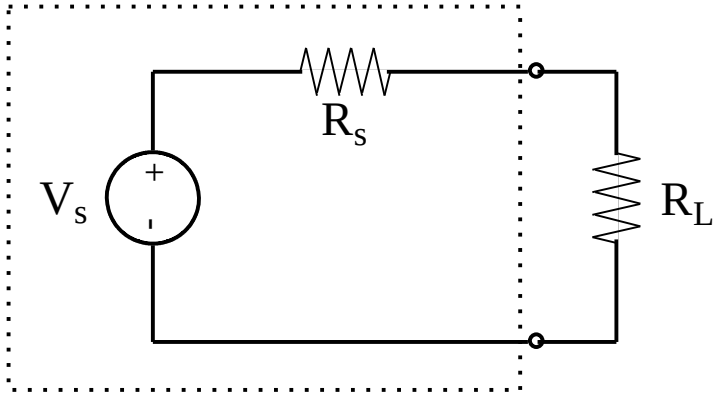

Maximum Power Transfer Theorem

- We can reduce any linear circuit with 2 output terminals to a Thevenin (or Norton Equivalent)
- If we connect a resistive load, R_L, maximum power is delivered to the load when $R_L = R_{TH} = R_{eq}$
- At this condition,

$$P_L = \left[\frac{V_{TH}^2}{4R_{TH}} \right] = \left[\frac{R_N I_N^2}{4} \right]$$

Proof

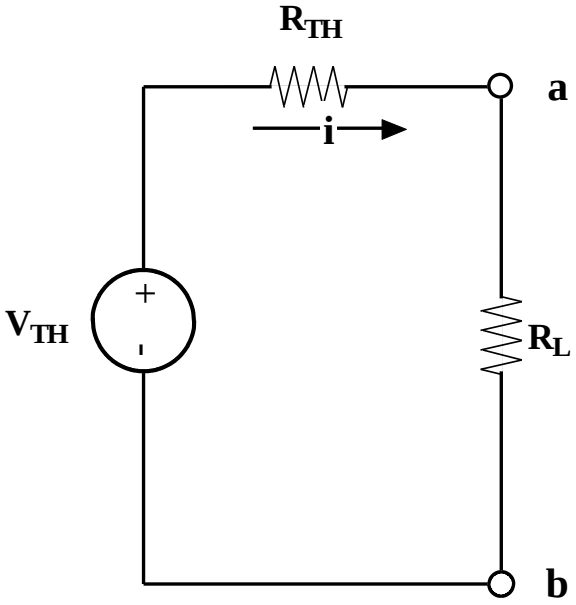

$$i = V_{TH} \big/ \left(R_{TH} + R_L \right)$$

$$P_L = Vab \bullet i = iR_L \bullet i = i^2 R_L$$

$$P_L = \frac{V_{TH}^2 R_L}{\left(R_{TH} + R_L \right)^2}$$

Maximize vs. R_L

$$\left(\frac{\partial P_L}{\partial R_L} \right) = 0 = V_{TH}^2 \left[\frac{1}{\left(R_{TH} + R_L \right)^2} - \frac{2R_L}{\left(R_{TH} + R_L \right)^3} \right]$$

$$\rightarrow 0 = \left(R_{TH} + R_L \right) - 2R_L$$

$$\rightarrow R_L = R_{TH}$$

$$p_{\max} = \left(P_L \right)_{R_L = R_{TH}} = \left[\frac{V_{TH}^2 R_{TH}}{\left(R_{TH} + R_{TH} \right)^2} \right] = \left[\frac{V_{TH}^2}{4R_{TH}} \right]$$

Intuitive

- If $R_L=0$ then the ***LOAD*** dissipates no power
  - Note this is the condition where the internal source delivers maximum power, but nothing is getting to the load!
- If $R_L=\infty$ then $i=0$ and again the ***LOAD*** dissipates no power
- So Max is somewhere in between

Normalize Plot

- R_L normalized to R_{TH}
- P_L Normalized to V^2_{TH}/R_{TH}
- Note that Physics Is Especially Cruel in The Case of $R_L<R_{TH}$

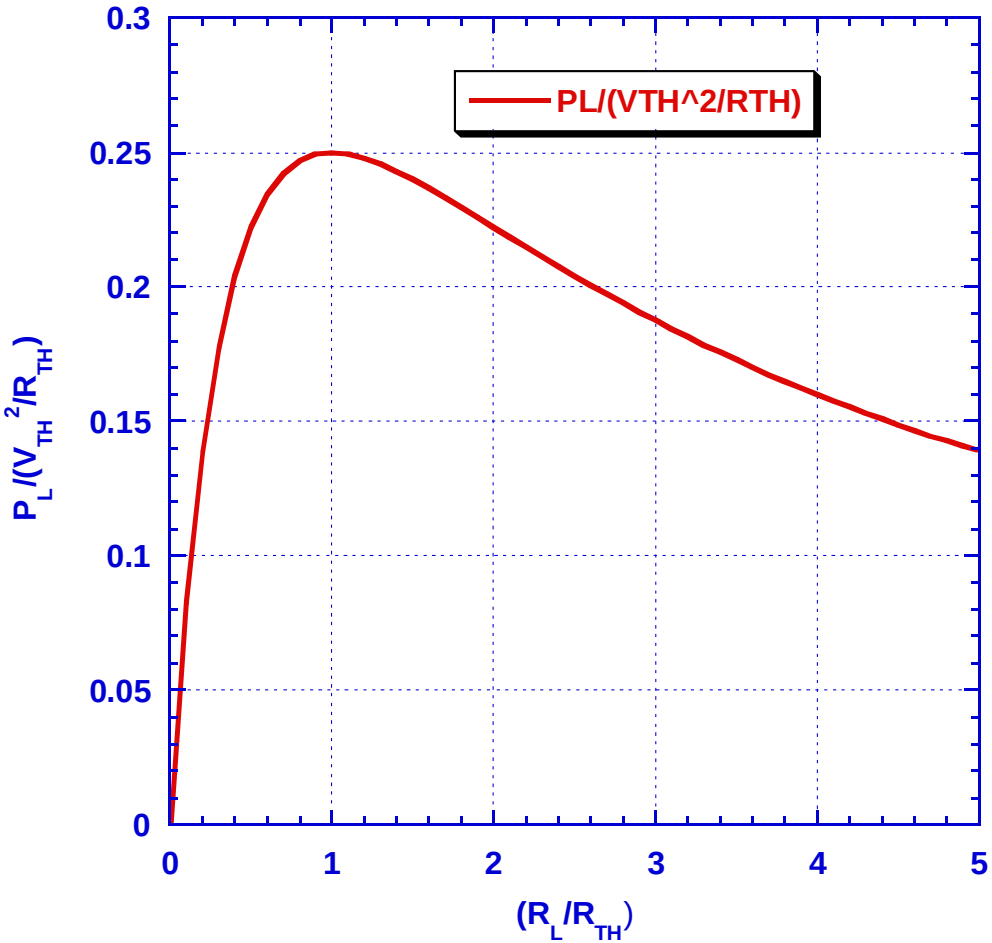

Power Efficiency

$$\left(\frac{P_L}{P_{total}}\right) = \left[\frac{i^2 R_L}{i^2\left(R_L + R_{TH}\right)}\right]$$

$$= \left[\frac{R_L}{R_L + R_{TH}}\right]$$

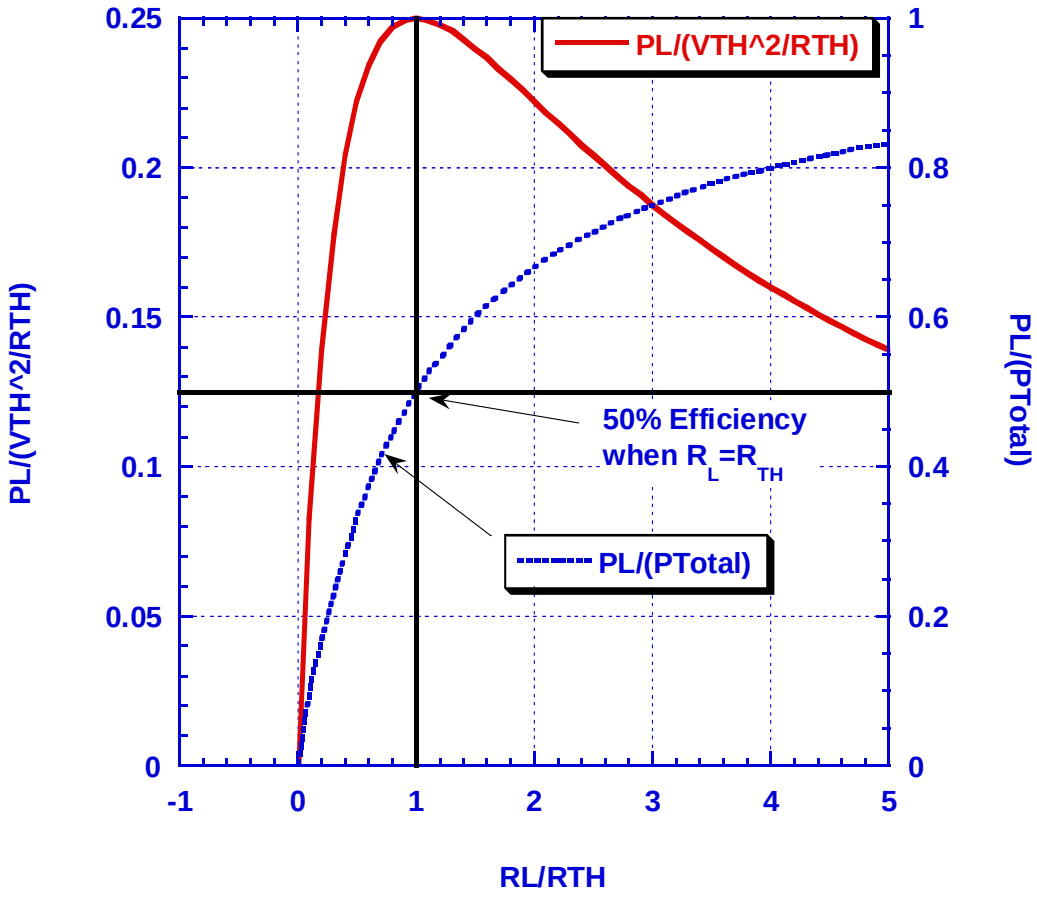

Comments

- The Most Interesting Cases of Maximum Power Transfer Problem Occur for AC Circuits (later in class)
- Low Frequency Example: Bipolar Common Collector Buffer

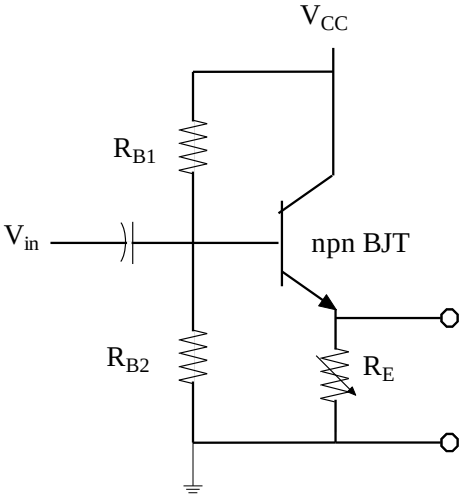

Common Collector Amp

Circuit

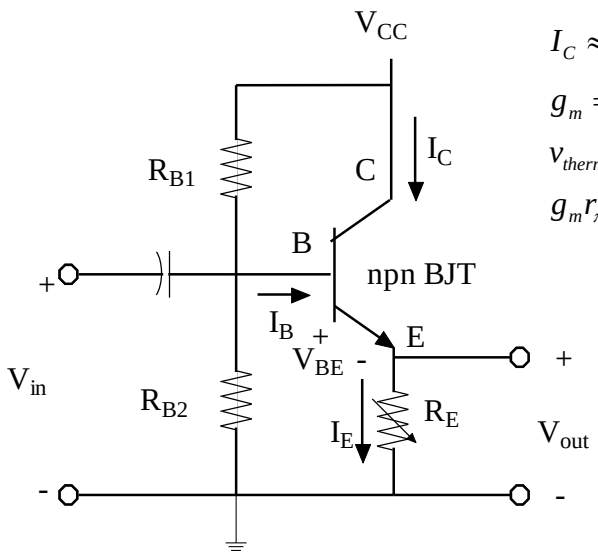

$$I_C \approx I_0\left(e^{V_{BE}/v_{thermal}} - 1\right)$$

$$g_m = \left(I_C / v_{thermal}\right)$$

$$v_{thermal} = k_B T / q \approx 25.8mV$$

$$g_m r_\pi = \beta = \left(I_C / I_B\right) \sim 100$$

Low Frequency Model

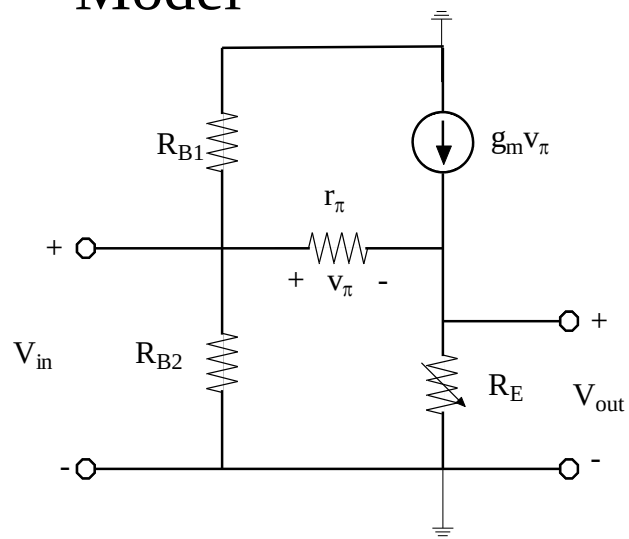

Verify:

$$\left(V_{out}/V_{in}\right) = \left[\frac{(\beta+1)R_E}{(\beta+1)R_E + r_\pi}\right] \approx 1$$

$$R_{TH} = \left[\frac{R_E r_\pi}{(\beta+1)R_E + r_\pi}\right]$$

$$= \left[\frac{R_E}{(1+1/\beta)g_m R_E + 1}\right]$$

Adjust Output Equivalent Resistance R_{TH} by Choice of I_C&R_E