A FIRST LOOK AT TRANSISTORS: THE BIPOLAR JUNCTION TRANSISTOR (BJT)

Credits to F. Ulaby

© Fred Terry, FA13

Transistors Circuits: Key Concepts I

- Transistors Are 3 or 4 Terminal Devices Built from Semiconductors & Are The Building Block of Modern Analog, Digital, and Mixed Signal Integrated Circuits
- Key Idea Follows From 3 Terminal Structure: Current Flow From One Terminal to a Second is Controlled By A Small Amount of Power at the Third
- ***Control Valves for Current Flow***

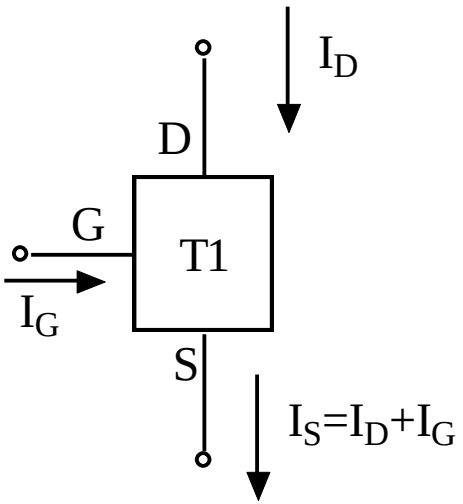

$$I_G \ll I_D$$

$$\textit{Controlling Power} \ll \textit{Controlled Power}$$

$$V_{GS} I_G \ll V_{DS} I_D$$

Our Objectives

- Understanding How These Elements (Transistors) Are Useful in Basic Analog Amplification and Digital Circuits
  - Some Basic Useful Circuit Topologies
  - How Does 215-Style Linear Circuit Analysis Help?
  - Brief Look At How Do We Deal with Nonlinearities
- Analog: Bias/Operating Points & Small Signal Amplification
- Digital: How Device Limitations/Nonlinearities Yield Digital Circuits
- What Circuit Effects Lead to Speed/Frequency Response Limitations (Later in Class)

Not Our Objectives

- Explaining *HOW* Transistors Accomplish Current Control: Big Part of EECS 320
- Dealing with All the Details
  - Important but 2nd Order Complications in Real Transistors
  - Clever Topologies to Improve Performance
  - Optimization for Real Applications
  - These Are Necessary to Become a Good Practicing Designer and Are the Subjects of EECS 311 (Analog) and EECS 312 (Digital) and following classes

Our Approach

- Look at Examples of Real Transistors & Circuits
- Idealize the Model of the Transistor to Capture the Major Ideas
- Introduce Physical Limitations That Really Matter at the Circuit/Concept Level
- Look at Useful Circuits with Idealized Devices
- Leave Details for Later Classes

Some Types of Transistors

- Bipolar Junction Transistors (BJT's)
  - npn & pnp
- Junction Field Effect Transistors (JFET's)
  - p & n- channel
- Modulation Doped Field Effect Transistors (MODFET's)/High Electron Mobility Transistors (HEMT's)
  - p & n- channel
- **Metal Oxide Semiconductor Field Effect Transistors (MOSFET's)**
  - **p & n- channel**

BJT: Our First 3 Terminal Device!

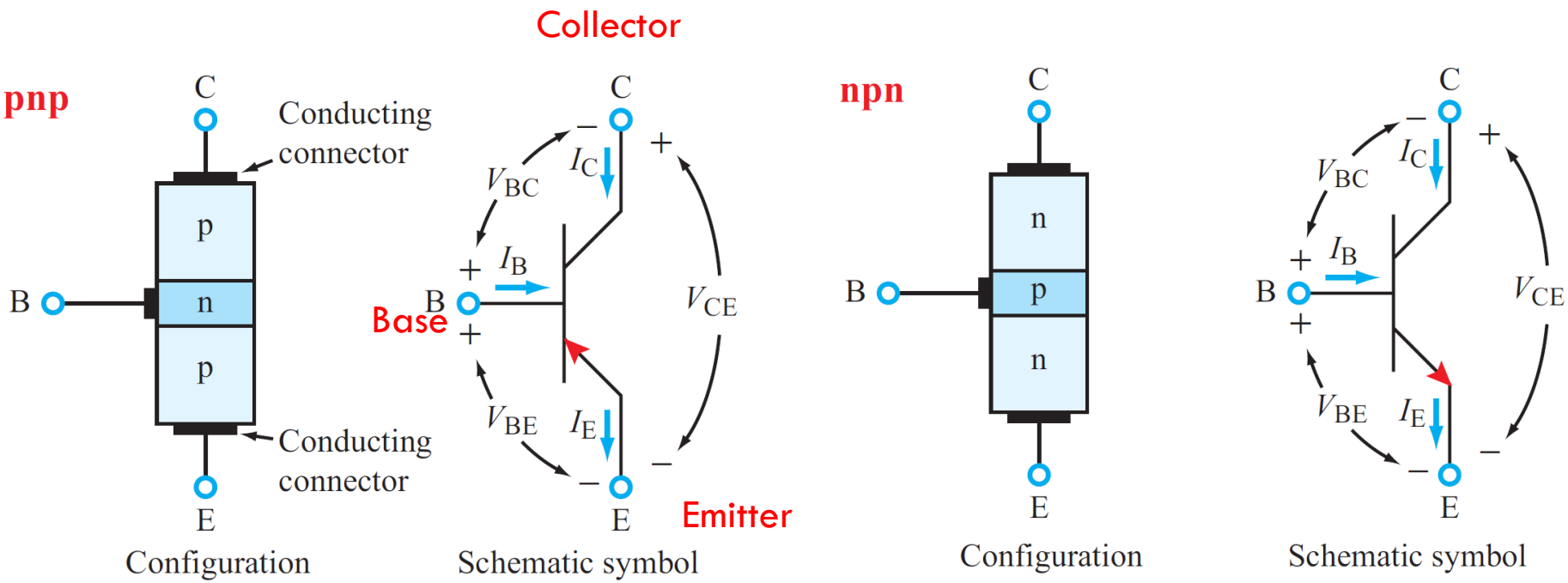

- Active device with dc sources
- Allows for input/output, gain/amplification, etc

BJT IV Characteristic

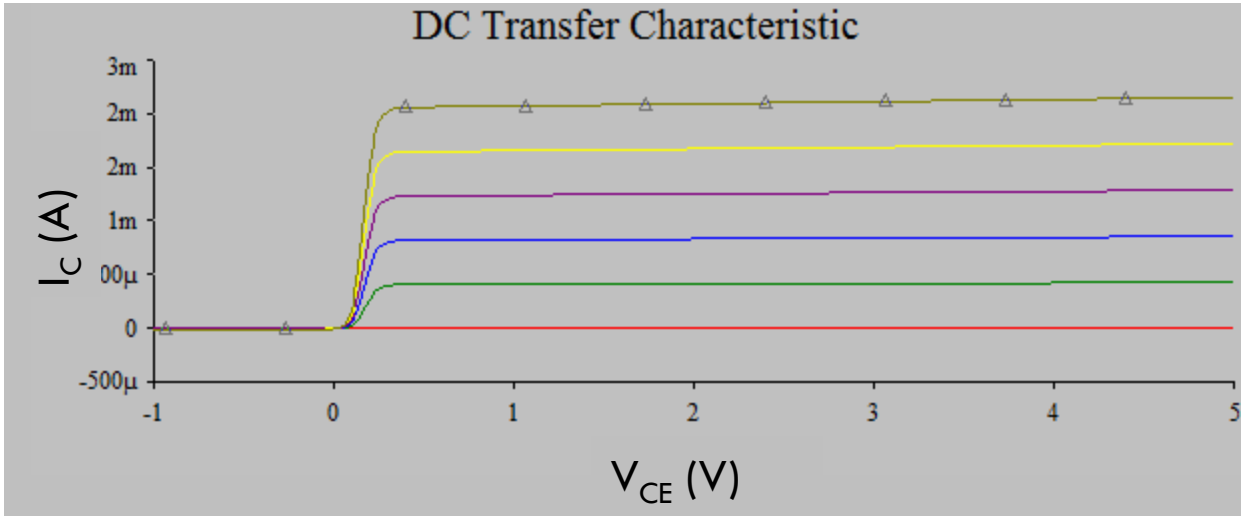

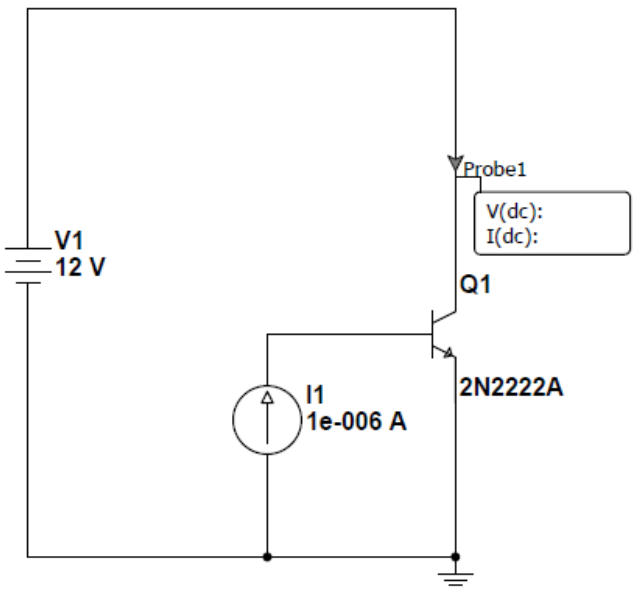

BJT Looks Like a Current Controlled Current Source (CCCS) for V_{CE}>~0.3 V and I_B>0

Sweep V1: -1 to 5V
Sweep I1: 0 to 10µA every 2µA

NPN BJT Models (Forward Active Mode)

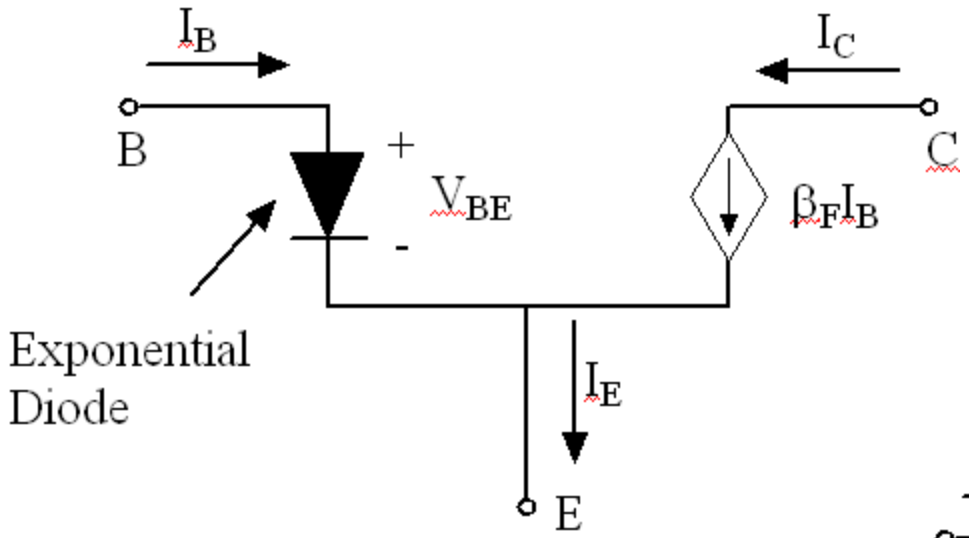

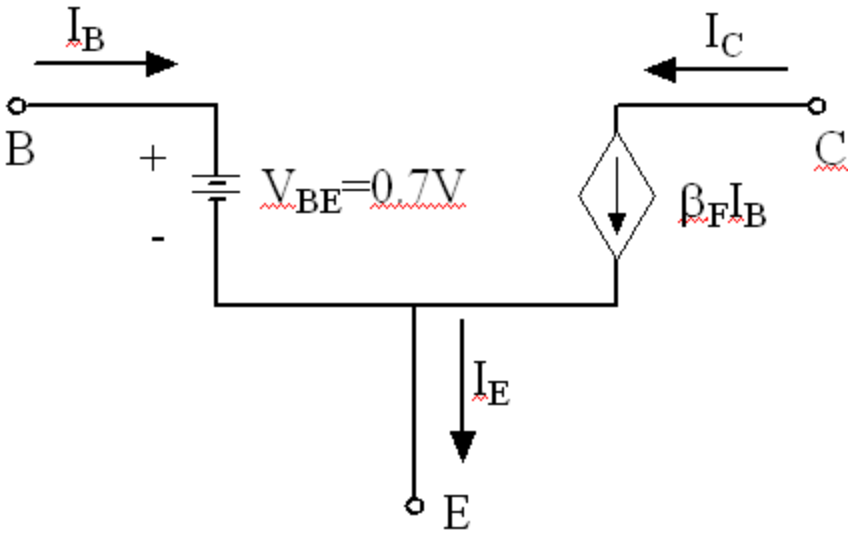

BJT Equivalent Circuit

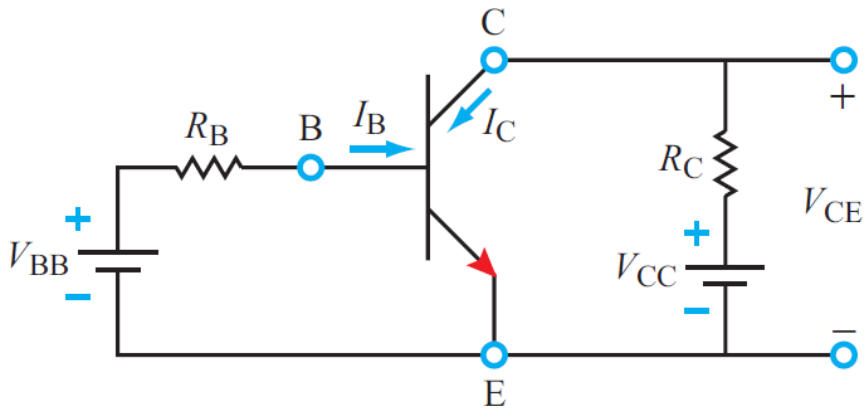

(a) Transistor circuit

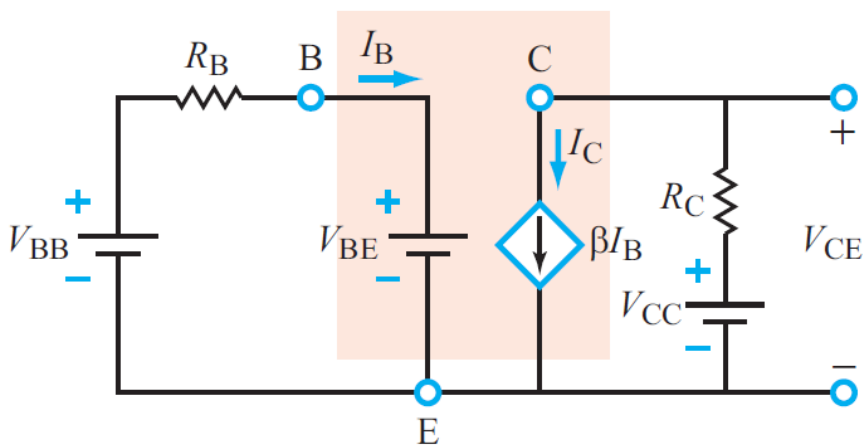

(b) Equivalent circuit

Looks like a current amplifier with gain β

The circuit is a BJT *common emitter amplifier*. Find V_{out} as a function of V_{in}.

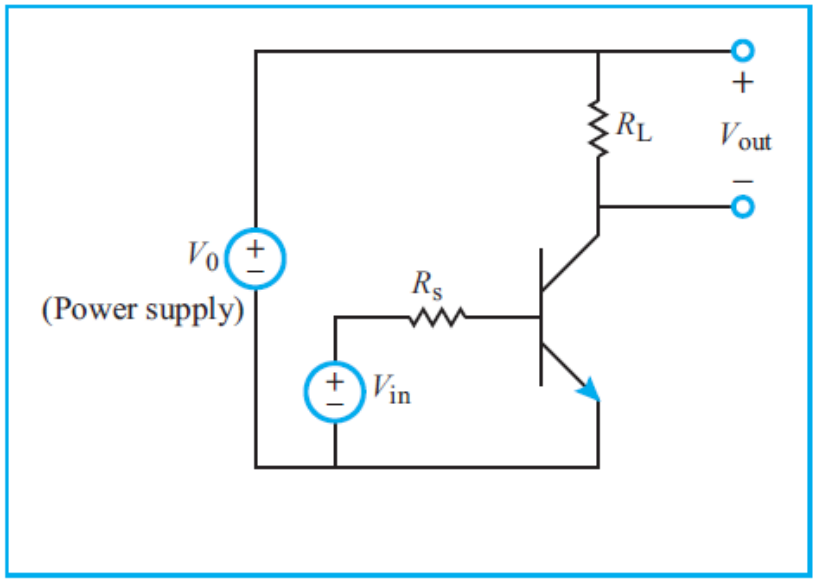

Solution: Upon replacing the BJT with its equivalent circuit model, we obtain the

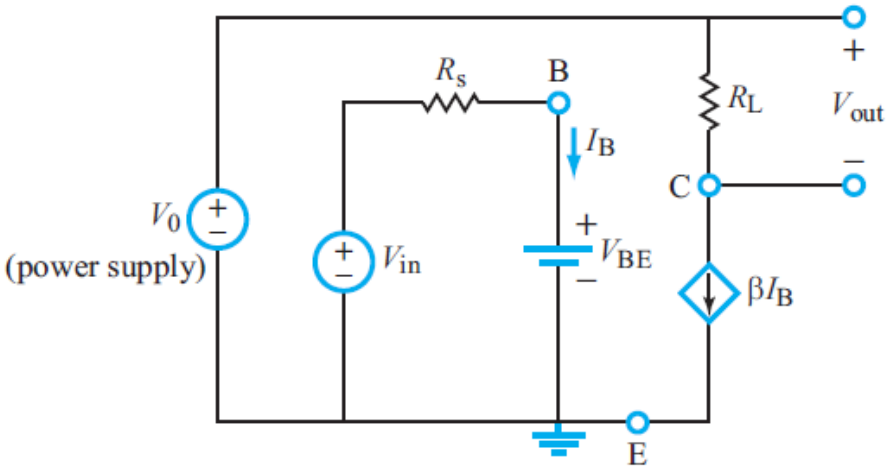

Digital Inverter With BJTs

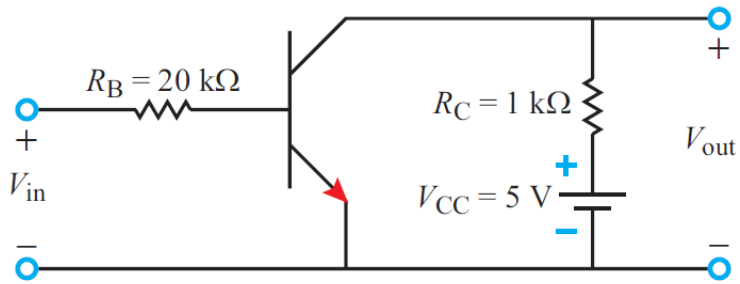

(a) Inverter circuit

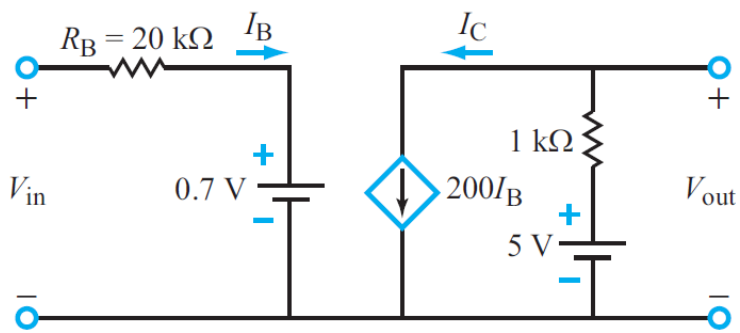

(b) Equivalent circuit

BJT Rules:

Vout cannot exceed Vcc=5V

Vout cannot be negative

In	Out
0	1
1	0

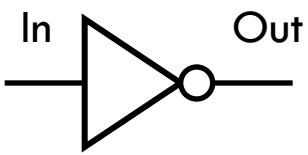

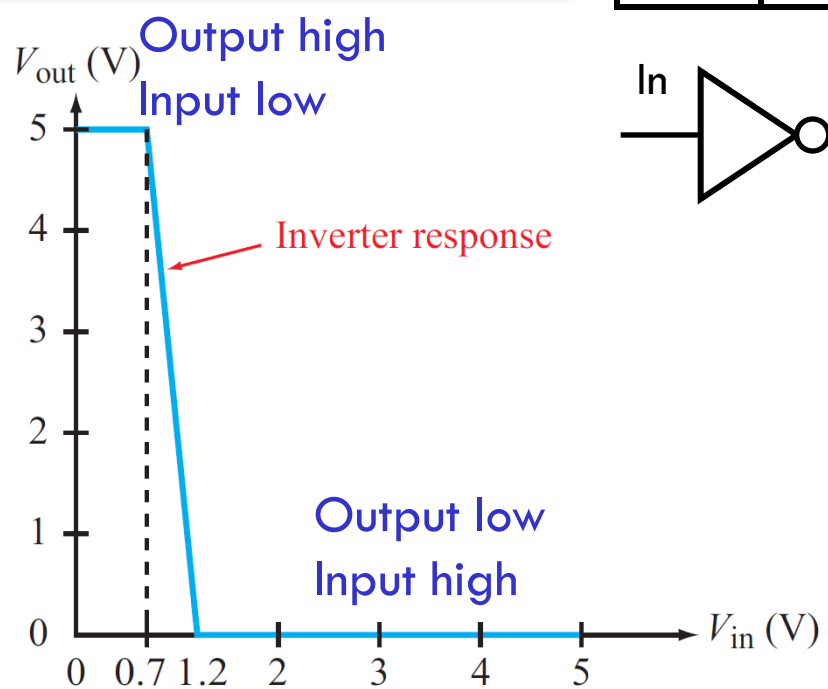

(c) V_{out} versus V_{in}

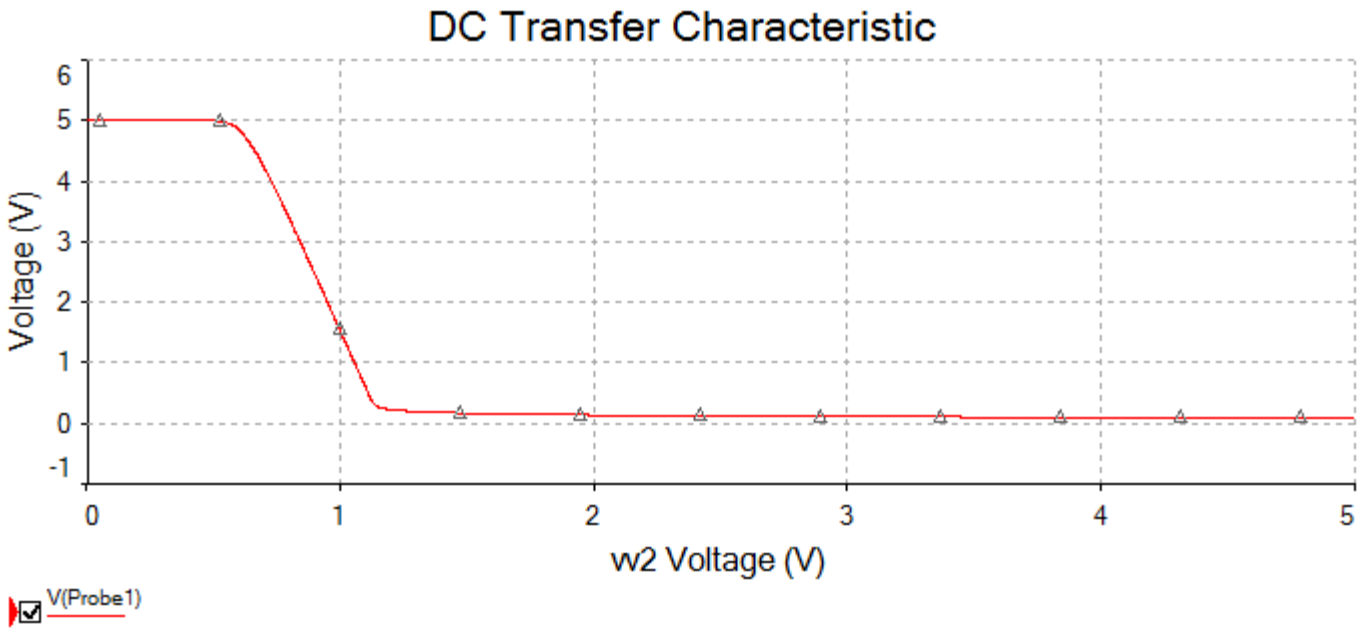
DC Transfer Characteristic
Voltage (V)
6
5
4
3
2
1
0
-1
0
1
2
3
4
5
w2 Voltage (V)
V(Probe1)

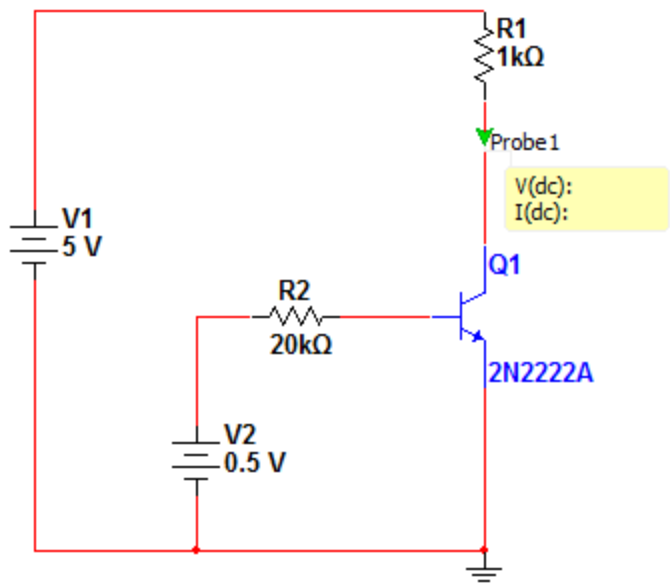
R1
1kΩ
Probe1
V(dc):
I(dc):
V1
5 V
Q1
R2
20kΩ
2N2222A
V2
0.5 V