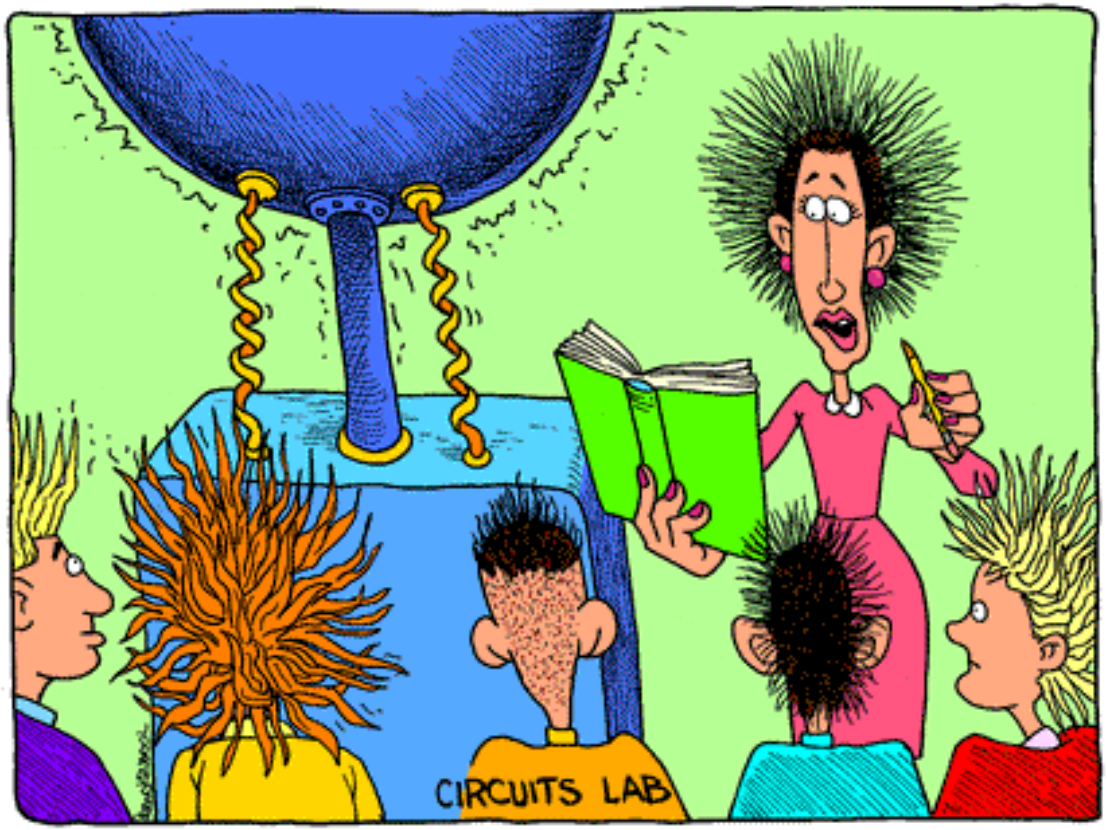

RESISTIVE CIRCUITS 2 & NON-LINEAR DEVICES 1

Fred Terry, FA13

Sources in series

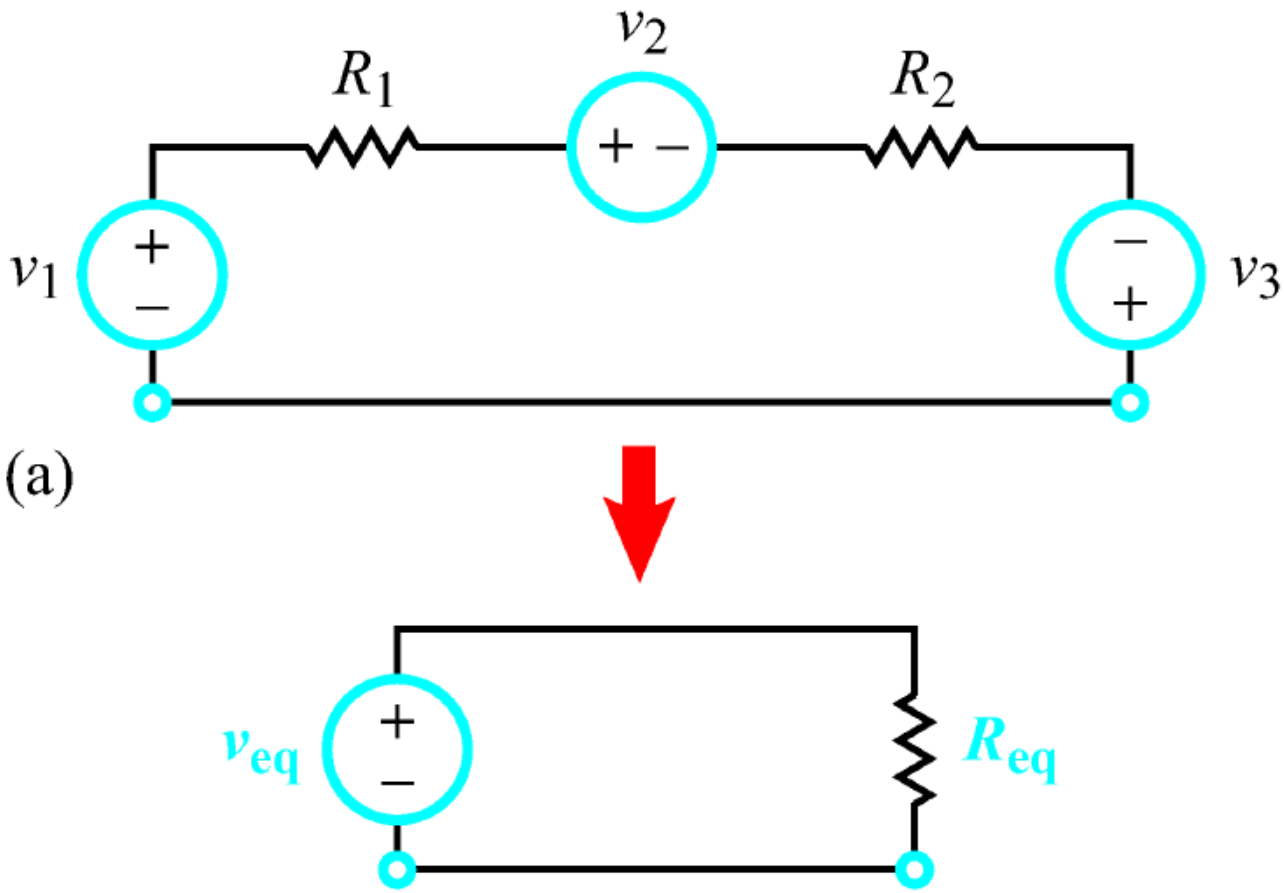

(b) $v_{eq} = v_1 - v_2 + v_3$ $\qquad R_{eq} = R_1 + R_2$

Sources in parallel

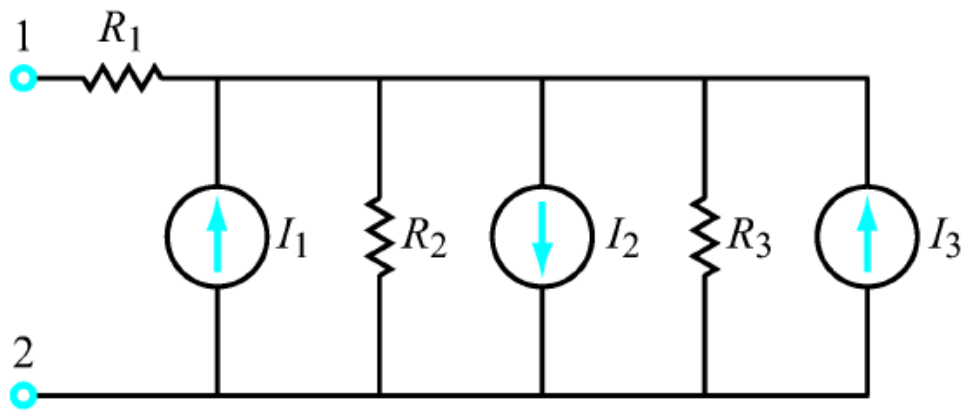

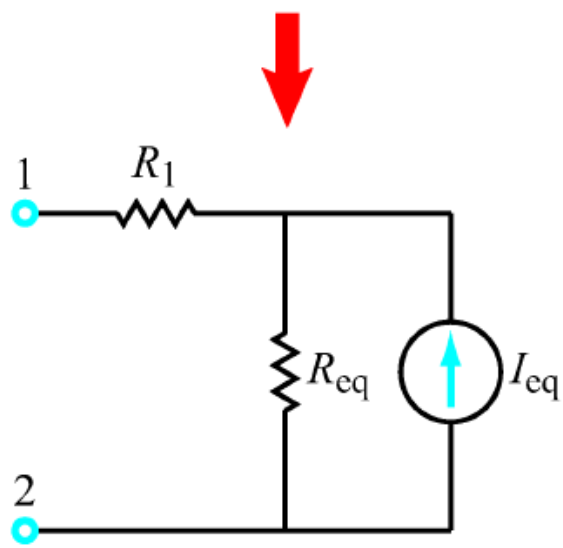

$$R_{eq} = R_2 \parallel R_3 = \frac{R_2 R_3}{R_2 + R_3}$$

$$I_{eq} = I_1 - I_2 + I_3$$

Non-Linear Elements

- Some Very Useful Applications Require *Linear* Circuits
  - Amplification, Filtering, Additive/Subtractive Mixing
- Some Very Useful Applications Require *Nonlinear* Circuits
  - AC/DC Conversion, Multiplication of Signals
- Some Useful Active Devices Are Inherently Nonlinear
  - How Can We Use Them?
  - In Particular, How Can We Obtain ~ Linear Circuits If Some Elements Are Nonlinear?

Diode: A One-Way Valve for Current Flow

Ideal

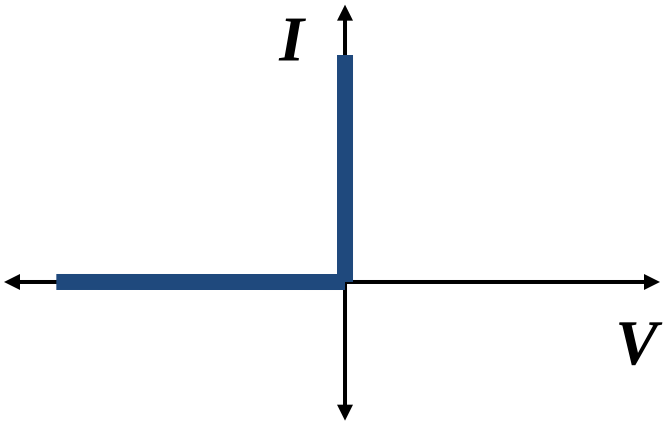

Actual

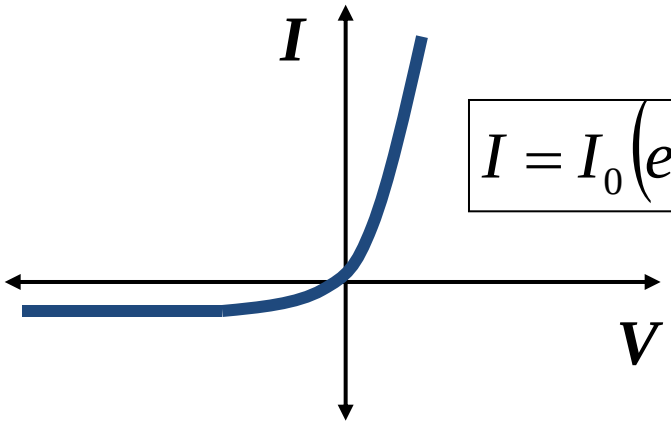

$$I = I_0\left(e^{qV/kT} - 1\right)$$

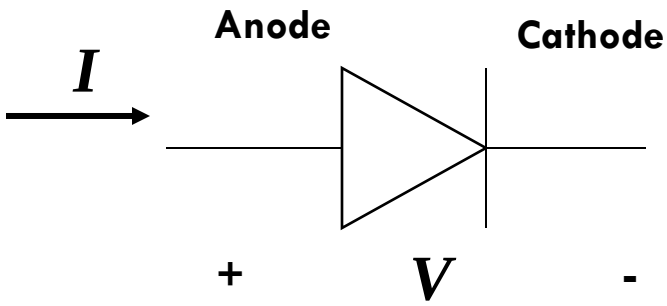

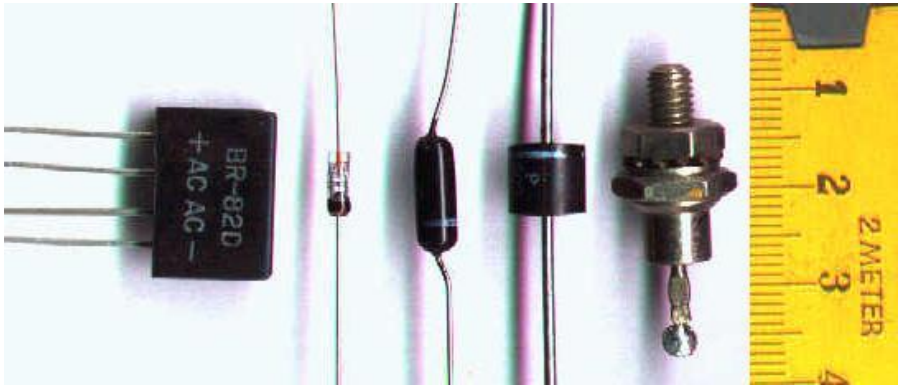

Real Diode: Jia Lu 423

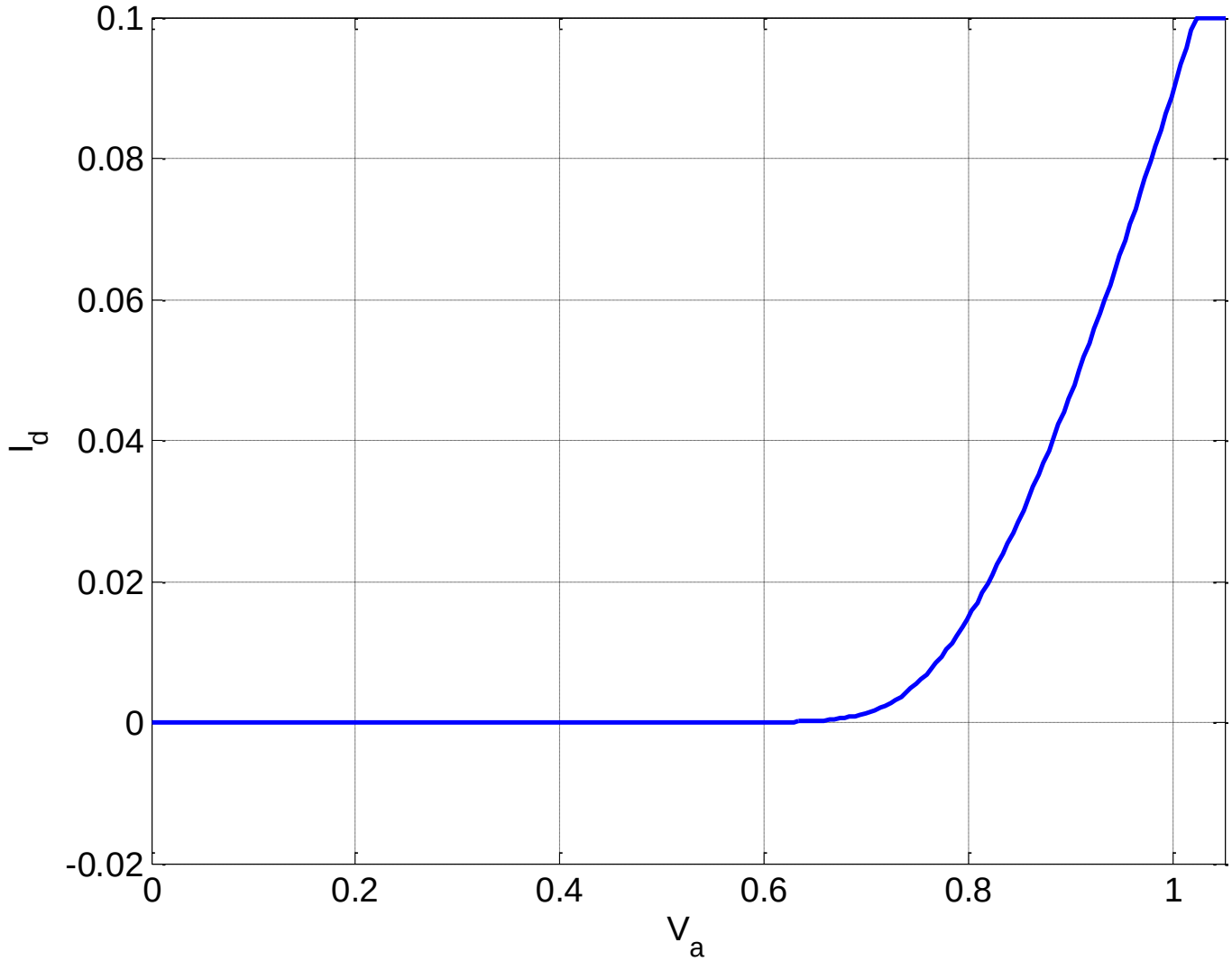

Real Diode: Jia Lu 423

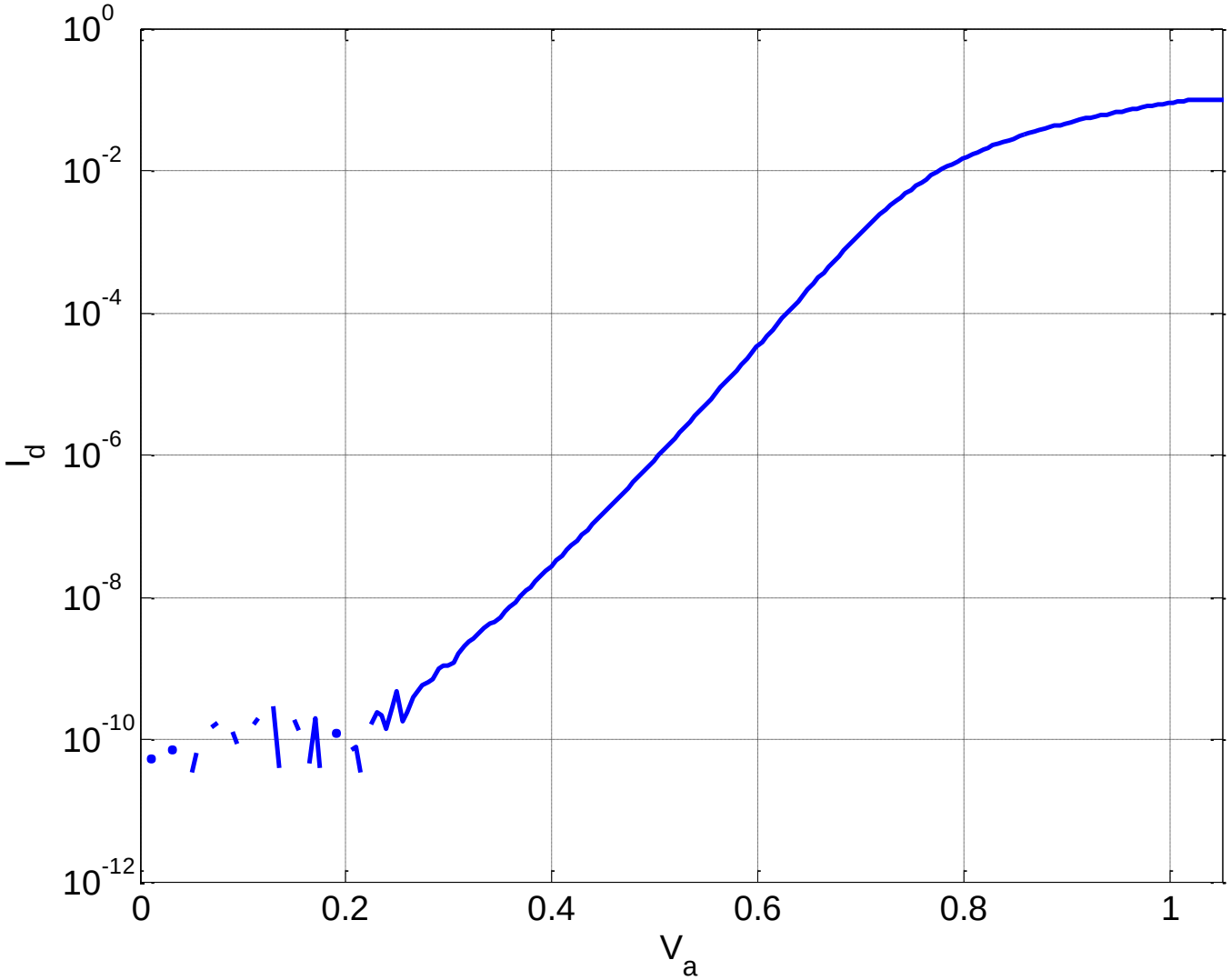

Real Diode: Jia Lu 423

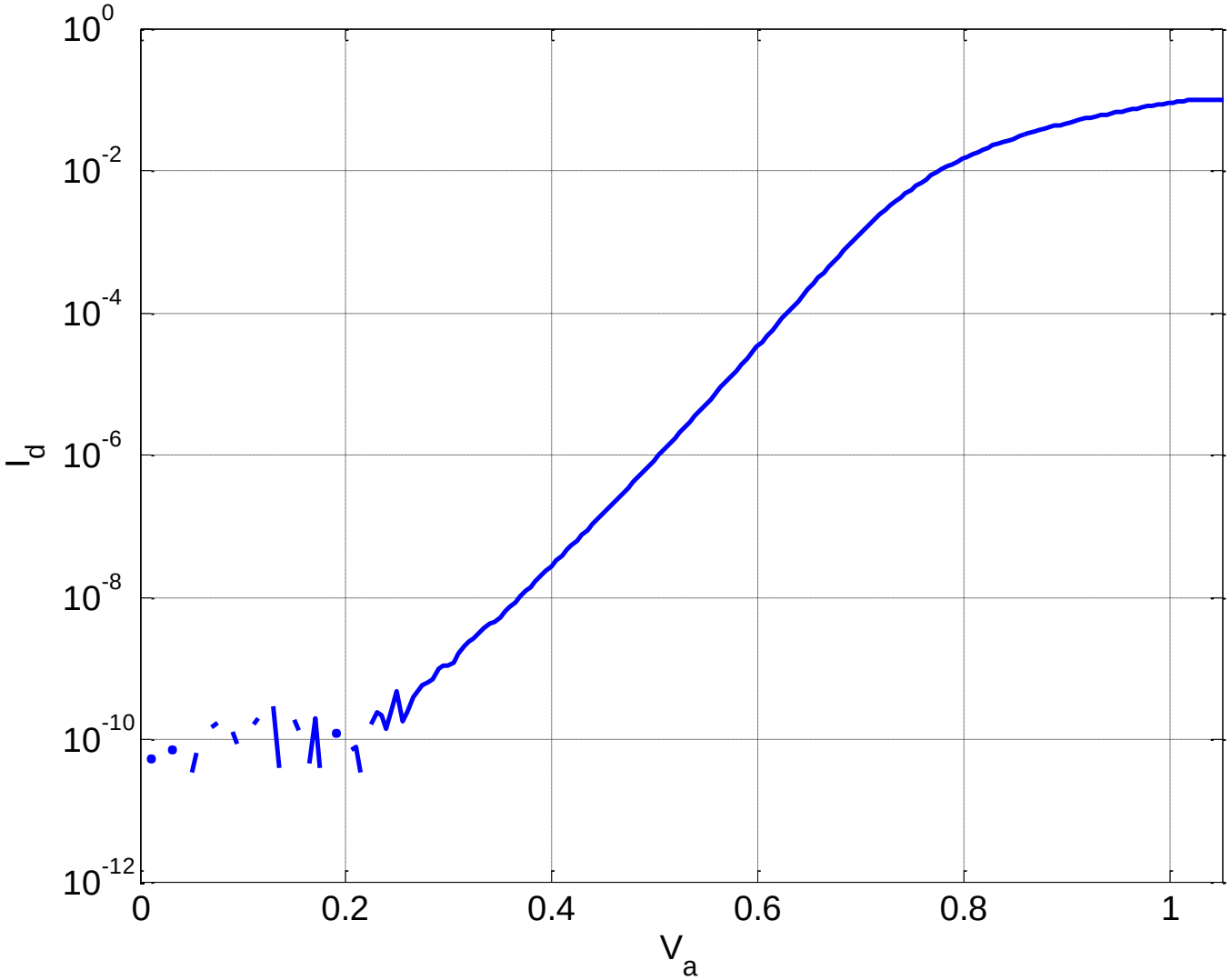

Reverse Bias

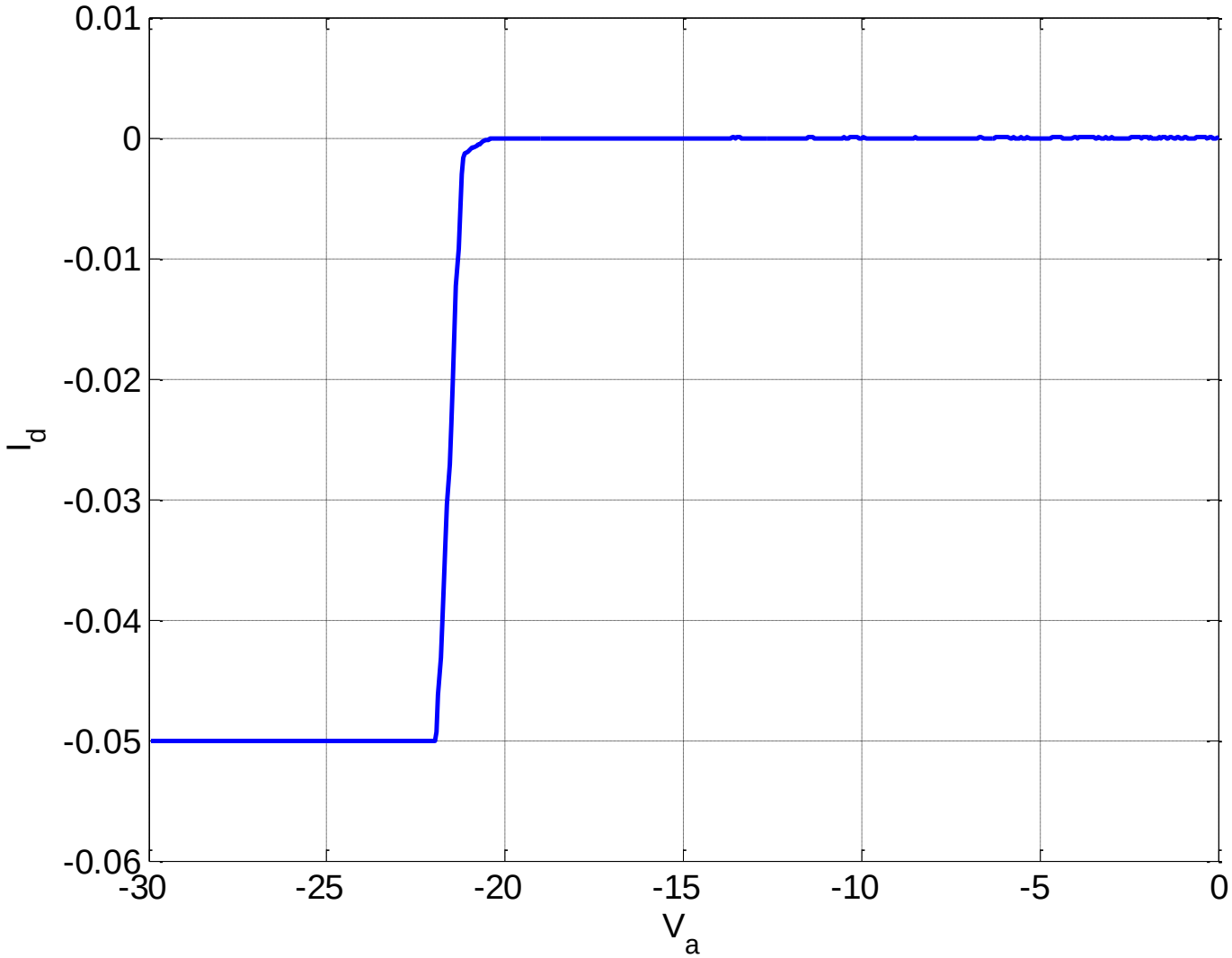

Reverse Bias

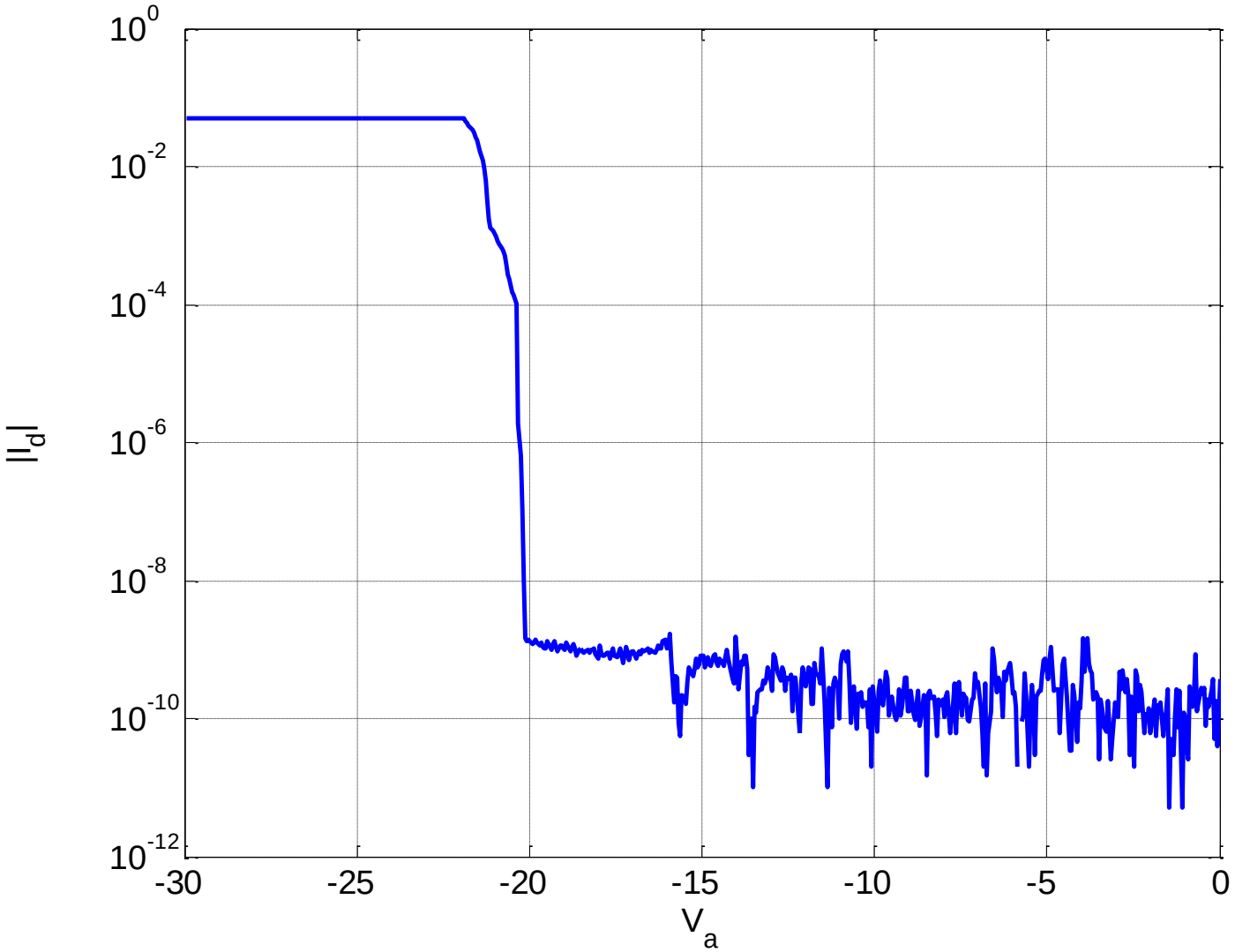

Diode Applications

- Rectifier
  - Power conversion
- Over-voltage protection
- Light emitter (light emitting diode LED)
- Light detector (photodiode, solar cell)

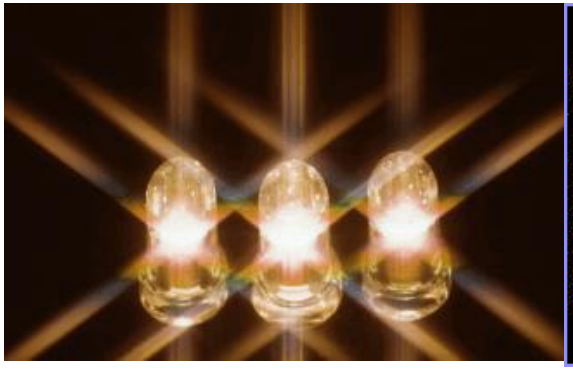

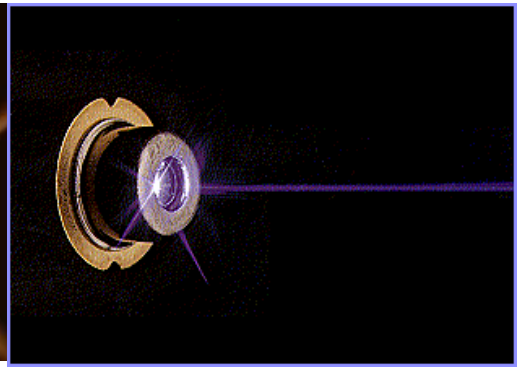

Diode Rectifiers

Half-wave rectifier

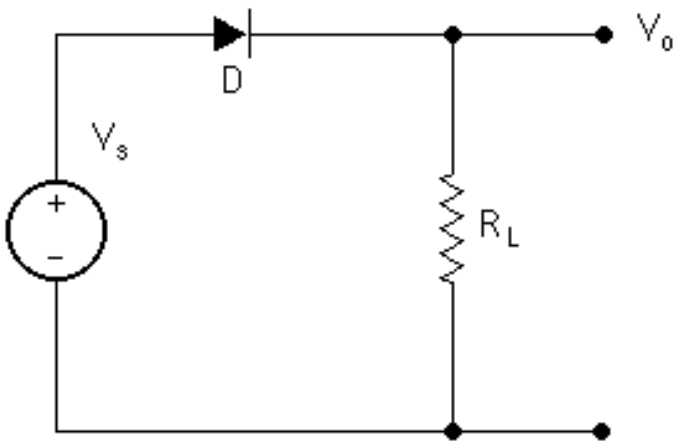

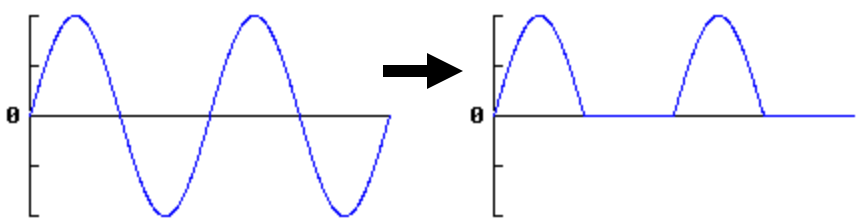

Full-wave rectifier

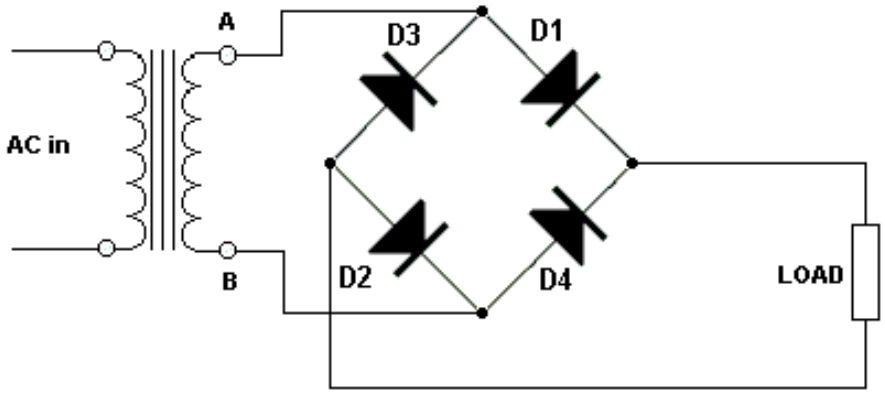

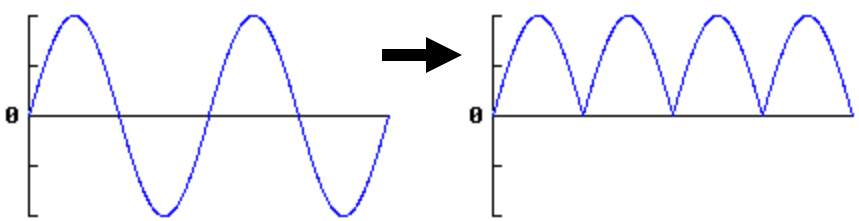

Light Sensitive Diodes

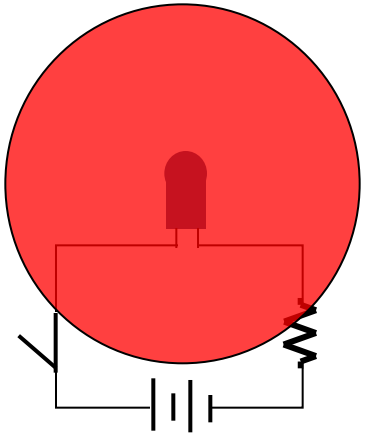

Light-emitting Diode

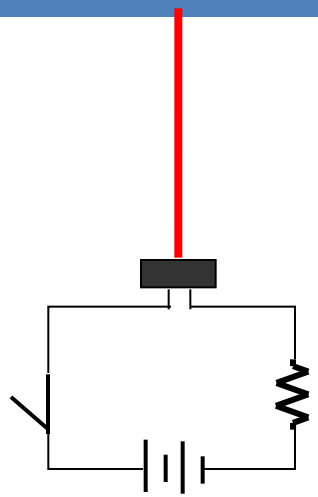

Semiconductor Laser

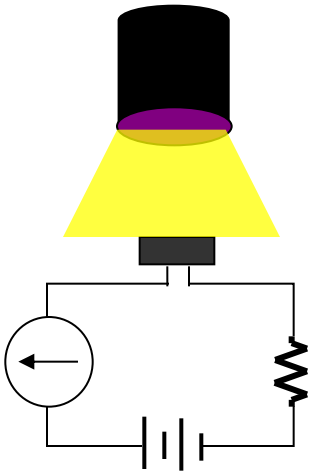

Visible Light Sensor

Constant Voltage Drop Model For Diodes

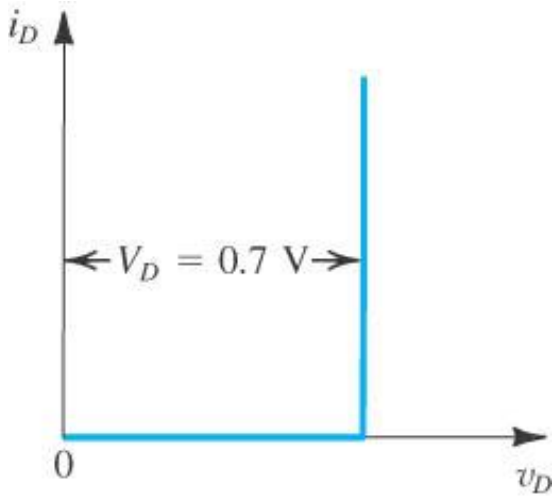

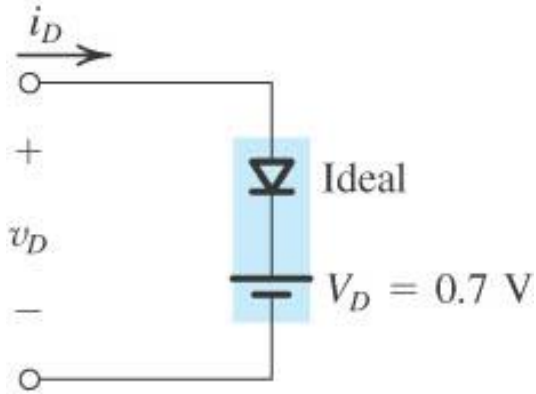

You will learn why V_D~0.7V in 320!

Simple circuit analysis using constant voltage drop model

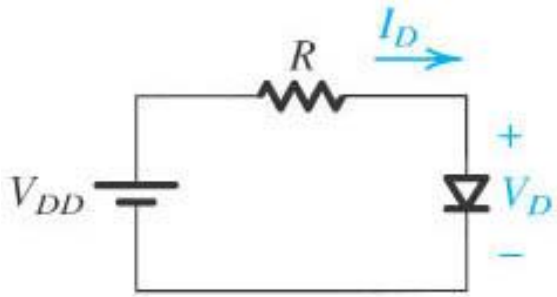

$$I_D = \frac{V_{DD} - 0.7}{R} = \frac{5 - 0.7}{1{,}000} = 4.3mA$$

$$V_{DD} = 5V \quad I_0 = 10^{-14} A \quad R = 1K\Omega$$

Exact Solution

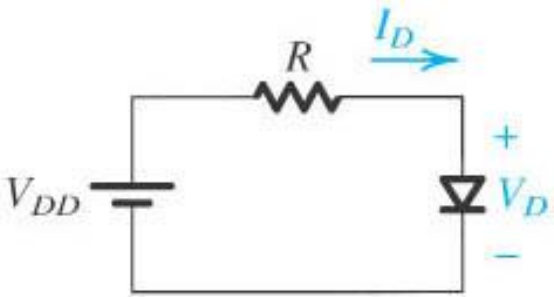

$$V_{DD} = 5V \quad I_0 = 10^{-14} A \quad R = 1K\Omega$$

$$V_{DD} = I_D R + V_D$$

$$= RI_0\left(e^{qV_D/kT} - 1\right) + V_D$$

$$\frac{kT}{q} = 25.85mV \ @300K$$

Interative Solution Yields

$$V_D \approx 0.6925V$$

$$I_0 \approx 4.3075mA$$

Mixers

- Exponential diodes can be used as frequency mixers (multipliers)
- Key idea below
- Tricks: current to voltage conversion, removing unwanted components

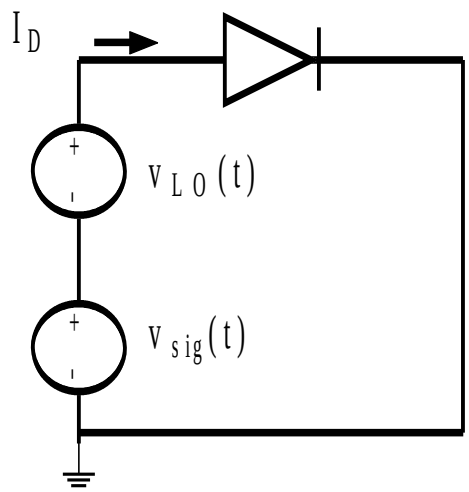

$$I_D = I_0\left[\exp\left(\frac{v_{sig}+v_{LO}}{v_{th}}\right)-1\right]$$

$$= I_0\left[\left(\frac{v_{sig}+v_{LO}}{v_{th}}\right)+\frac{1}{2}\left(\frac{v_{sig}+v_{LO}}{v_{th}}\right)^2+\frac{1}{3!}\left(\frac{v_{sig}+v_{LO}}{v_{th}}\right)^3+\ldots\right]$$

2 Diode Mixer

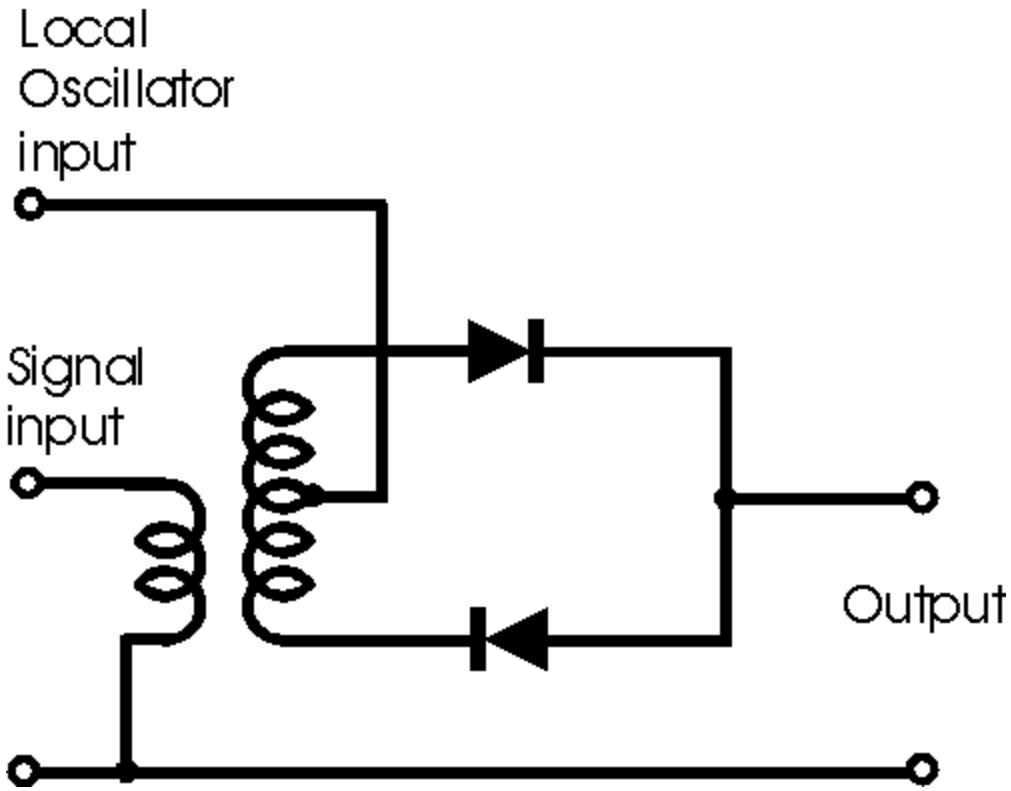
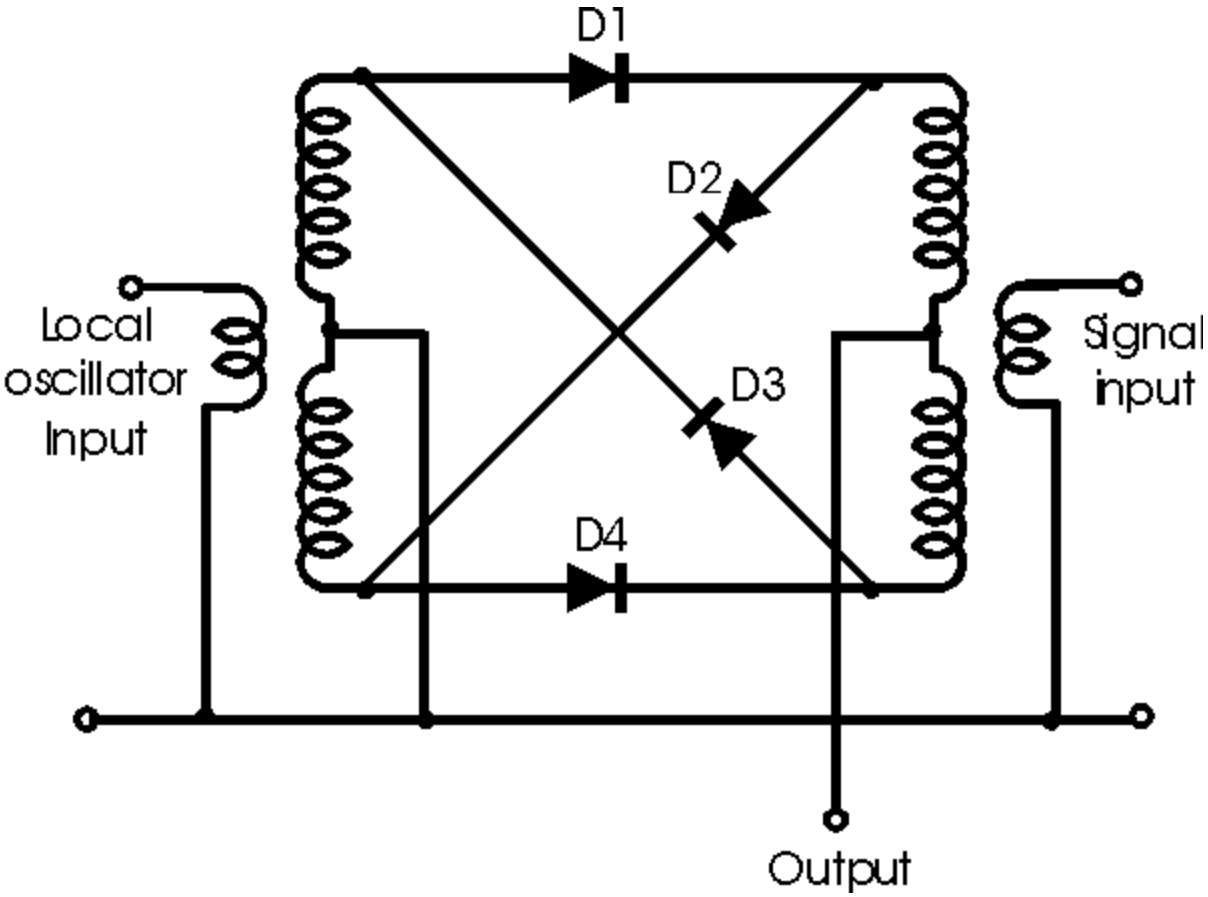
4 Diode Mixer