SUPERHETERODYNE RECEIVER: THE SEQUEL

Fred Terry

Fall, 2013

BIG Points From Last Few Days

- Complex Poles/Resonance Let Us Make Better Filters
  - Flatter Passbands, Sharper Roll-off, Better Group Delays
- Active Filters
  - Let Us Build Resonant Circuits With Only Capacitors
    - Additional Benefit of Negative Feedback
    - Easier Integration
  - Make It Easier to Construct High Order Filters

$$H(s) = H_1(s)H_2(s)H_3(s)H_4(s)$$

Outline

- Early in the semester, we looked at the superhet receiver we will revisit it today and
  - look at the parts we can now understand and analyze very well
  - How to move forward to understanding remaining parts

AM: System Ideal To Circuit Implementation

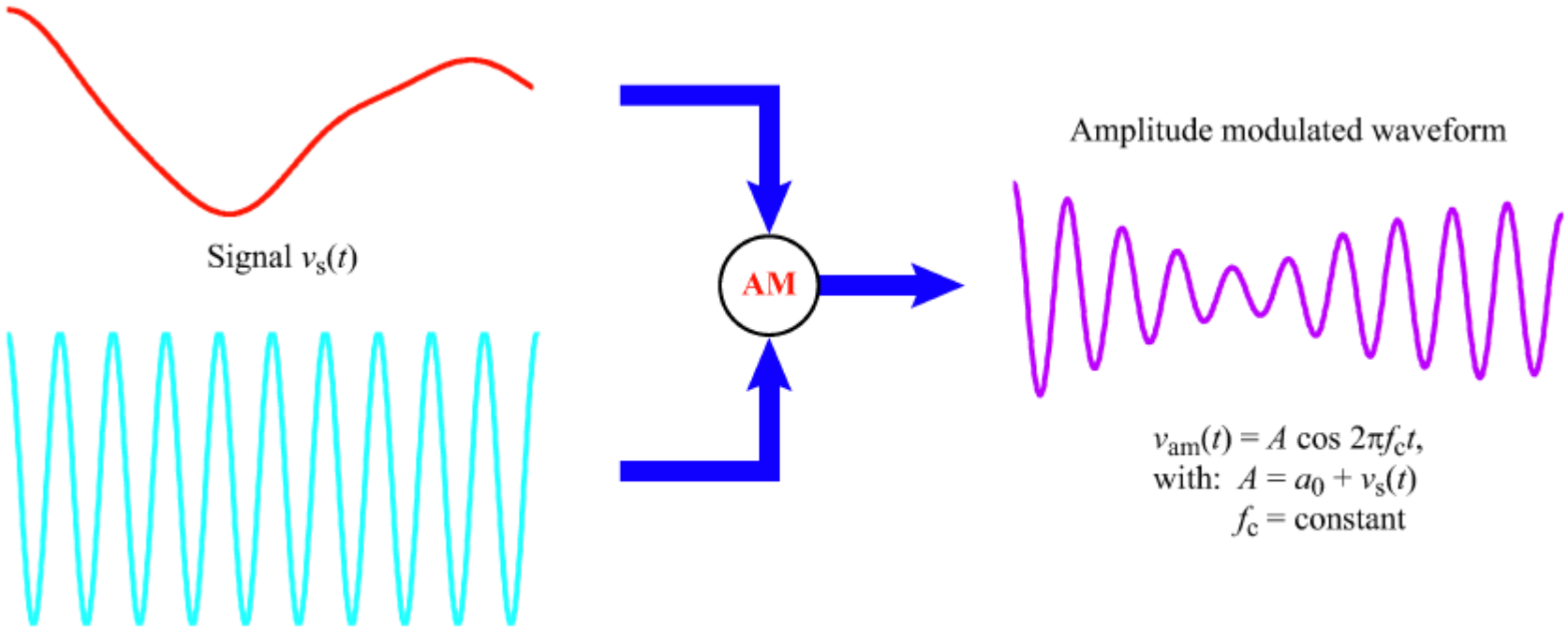

(a) AM

AM Signal Math

$$
\begin{aligned}
v_{in}(t) &= A(t)\cos(2\pi f_c t) \\
&= \left(1 + m\cos\left(2\pi f_{sig} t\right)\right)\cos(2\pi f_c t) \\
&= \cos(2\pi f_c t) + m\cos\left(2\pi f_{sig} t\right)\cos(2\pi f_c t) \\
&= \underbrace{\cos(2\pi f_c t)}_{carrier} + \underbrace{\frac{m}{2}\cos\left(2\pi\left(f_c - f_{sig}\right)t\right)}_{lower\ side\ band} + \underbrace{\frac{m}{2}\cos\left(2\pi\left(f_c + f_{sig}\right)t\right)}_{upper\ side\ band}
\end{aligned}
$$

$$typically:$$

$$f_{sig} \ll f_c$$

AM Example

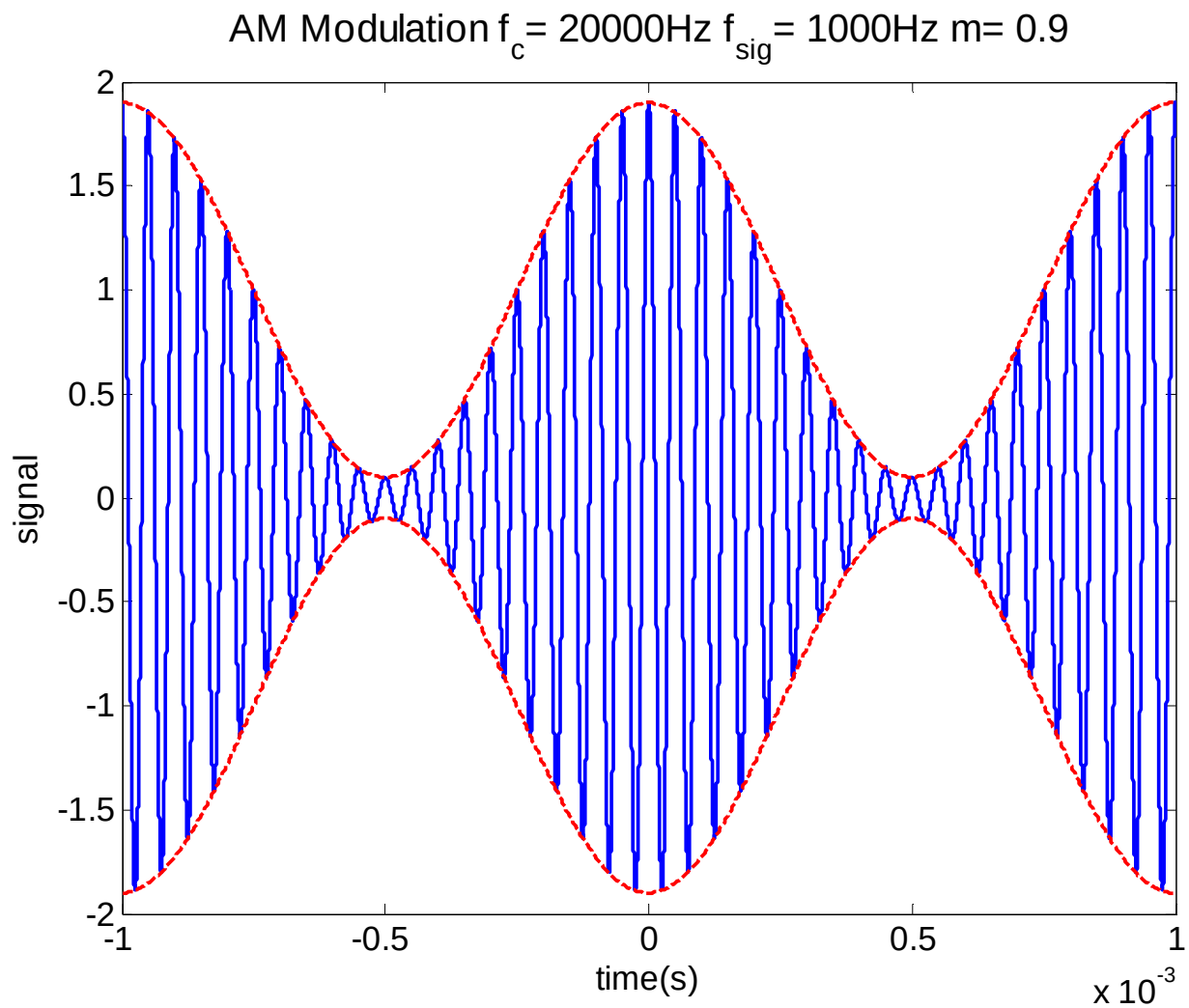
AM Modulation f_c= 20000Hz f_{sig}= 1000Hz m= 0.9
signal
time(s)
x 10^{-3}
2
1.5
1
0.5
0
-0.5
-1
-1.5
-2
-1
-0.5
0
0.5
1

Basic Concept of Receiver

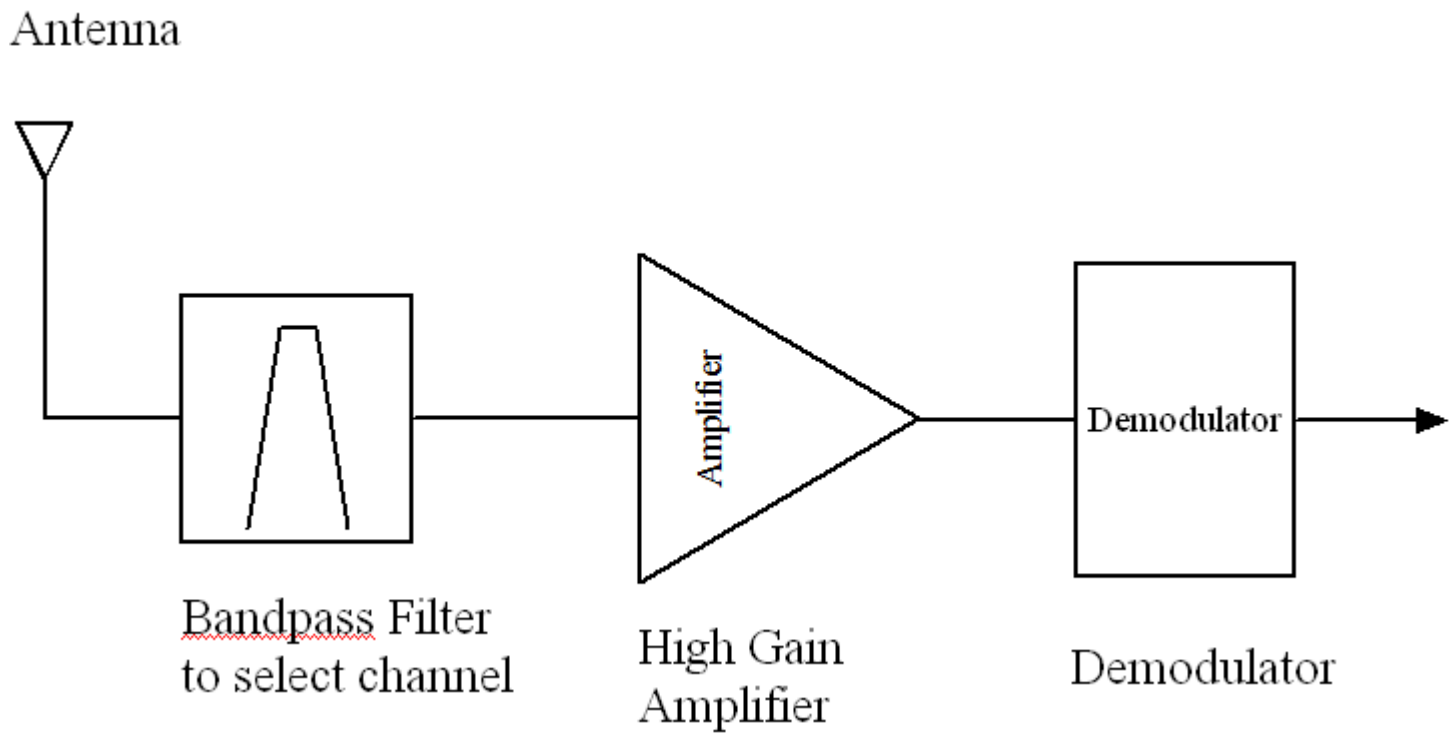

Superheterodyne Topology

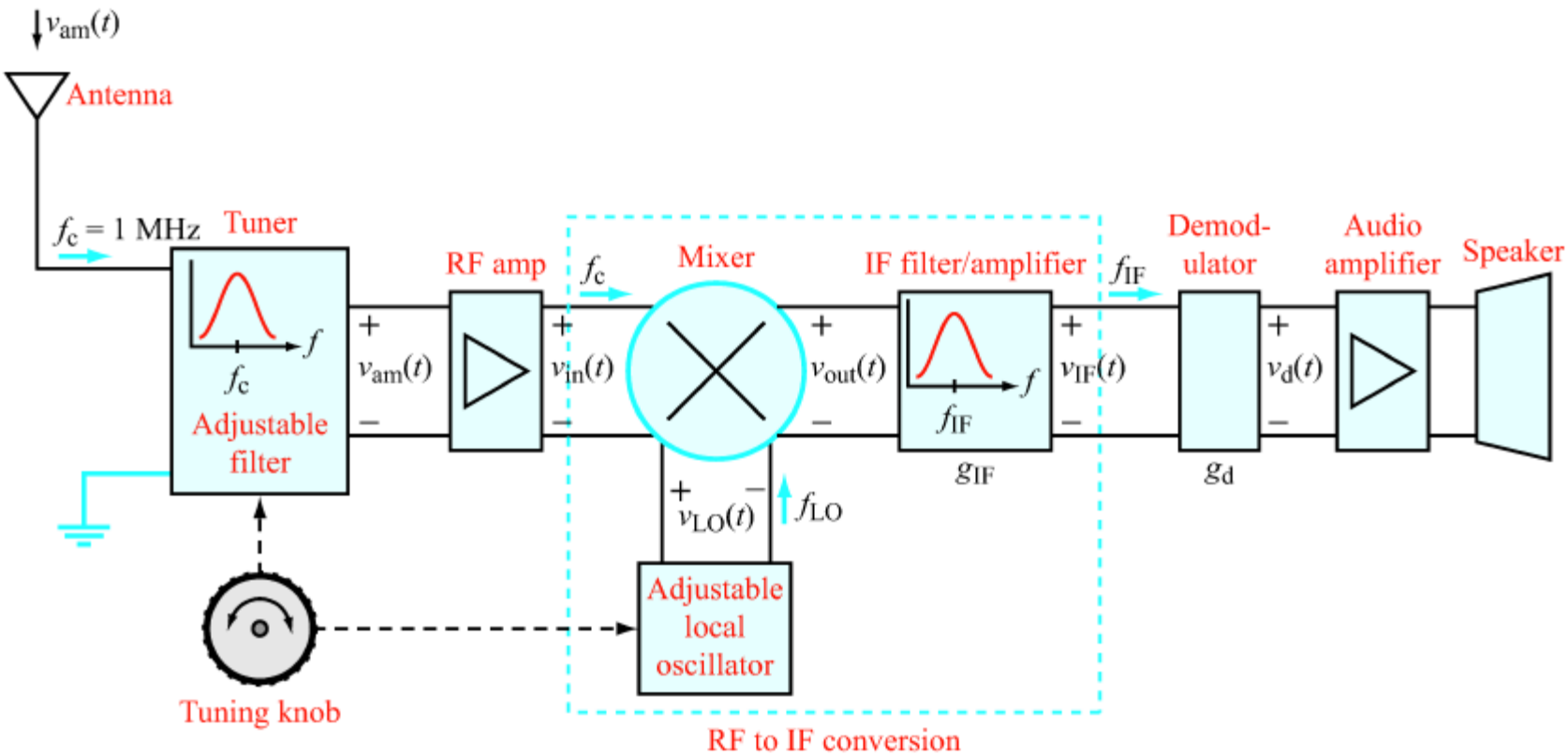

Figure 9-30: Block diagram of superheterodyne receiver.

Mixer Math

- A Mixer Is Just A Multiplier Circuit
  - Even A Diode Can Act As A Mixer
  - Clever Transistor Circuits

$$v_{out} = A(t)\cos(2\pi f_c t) A_{LO} \cos(2\pi f_{LO} t)$$

$$= \frac{1}{2} A(t) A_{LO} \left[\cos\left(2\pi (f_c - f_{LO}) t\right) + \cos\left(2\pi (f_c + f_{LO}) t\right) \right]$$

$$\overset{set}{(f_c - f_{LO})} = f_{IF} \text{ constant Intermediate Frequency (455KHz for AM)}$$

Gilbert Cell Mixer

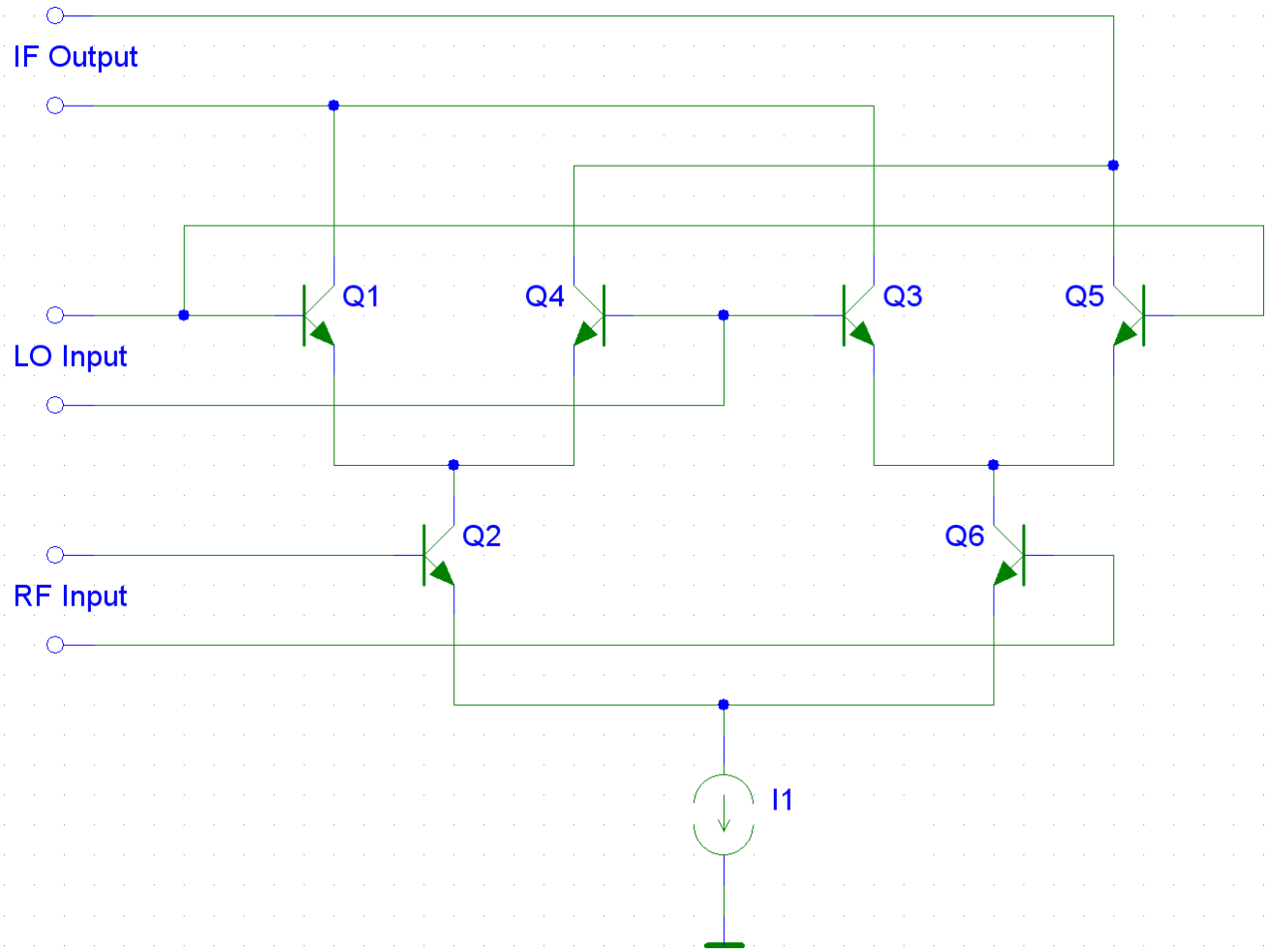

Key Element Is The IF Filter

- Now we can carefully design the critical bandpass filter exactly at one center frequency (f_{IF})

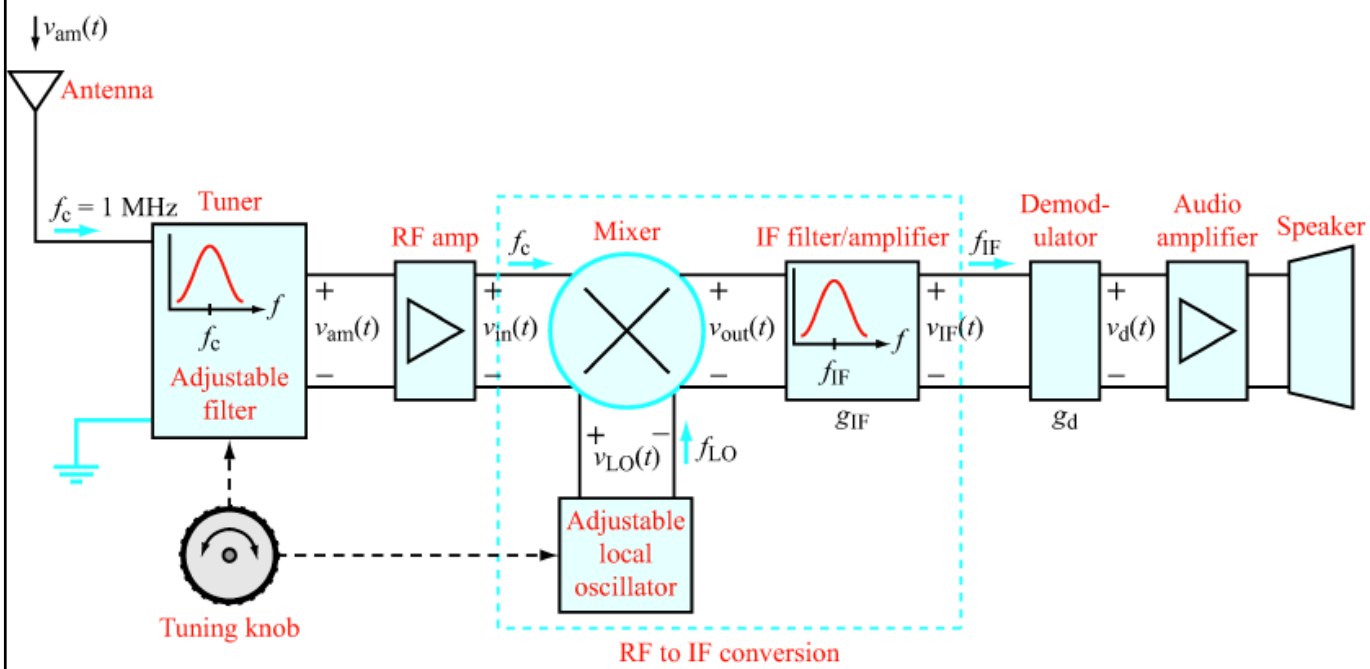

Figure 9-30: Block diagram of superheterodyne receiver.

IF Filter: 4th Order Butterworth Bandpass Filter at 455KHz

- 8th Order Transfer Function = Product of 4 Tuned 2nd Order Bandpass Functions

$$H(s) = H_1(s)H_2(s)H_3(s)H_4(s) = \prod_{i=1}^{4} H_i(s) = \frac{Gs^4}{\prod_{i=1}^{8}(s - p_i)}$$

$$H_1(s) = G_1 \frac{s}{(s-p_1)(s-p_2)} \qquad p_{1,2} = 2\pi(450,405Hz)e^{\pm j90.2409°}$$

$$H_2(s) = G_2 \frac{s}{(s-p_3)(s-p_4)} \qquad p_{3,4} = 2\pi(459,642Hz)e^{\pm j90.2409°}$$

$$H_3(s) = G_3 \frac{s}{(s-p_5)(s-p_6)} \qquad p_{5,6} = 2\pi(453,091Hz)e^{\pm j90.5817°}$$

$$H_4(s) = G_4 \frac{s}{(s-p_7)(s-p_8)} \qquad p_{7,8} = 2\pi(456,917Hz)e^{\pm j90.5817°}$$

Tune The Response with Q

$$H(s) = H_1(s)H_2(s)H_3(s)H_4(s) = \prod_{i=1}^{4} H_i(s) = \frac{Gs^4}{\prod_{i=1}^{8}(s - p_i)}$$

$$= \prod_{i=1}^{4} G_i \frac{(2\zeta\omega_{ni})s}{s^2 + (2\zeta\omega_{ni})s + \omega_{ni}^2}$$

$$= \prod_{i=1}^{4} G_i \frac{(\omega_{ni}/Q_i)s}{s^2 + (\omega_{ni}/Q_i)s + \omega_{ni}^2}$$

$$p_{i1,i2} = \omega_{ni} e^{\pm j\phi}$$

$$\phi = \tan^{-1}\left(\mp\left(\frac{1}{\zeta_i^2} - 1\right)^{1/2}\right) = \tan^{-1}\left(\mp\left(4Q_i^2 - 1\right)^{1/2}\right)$$

Bandpass Shape I

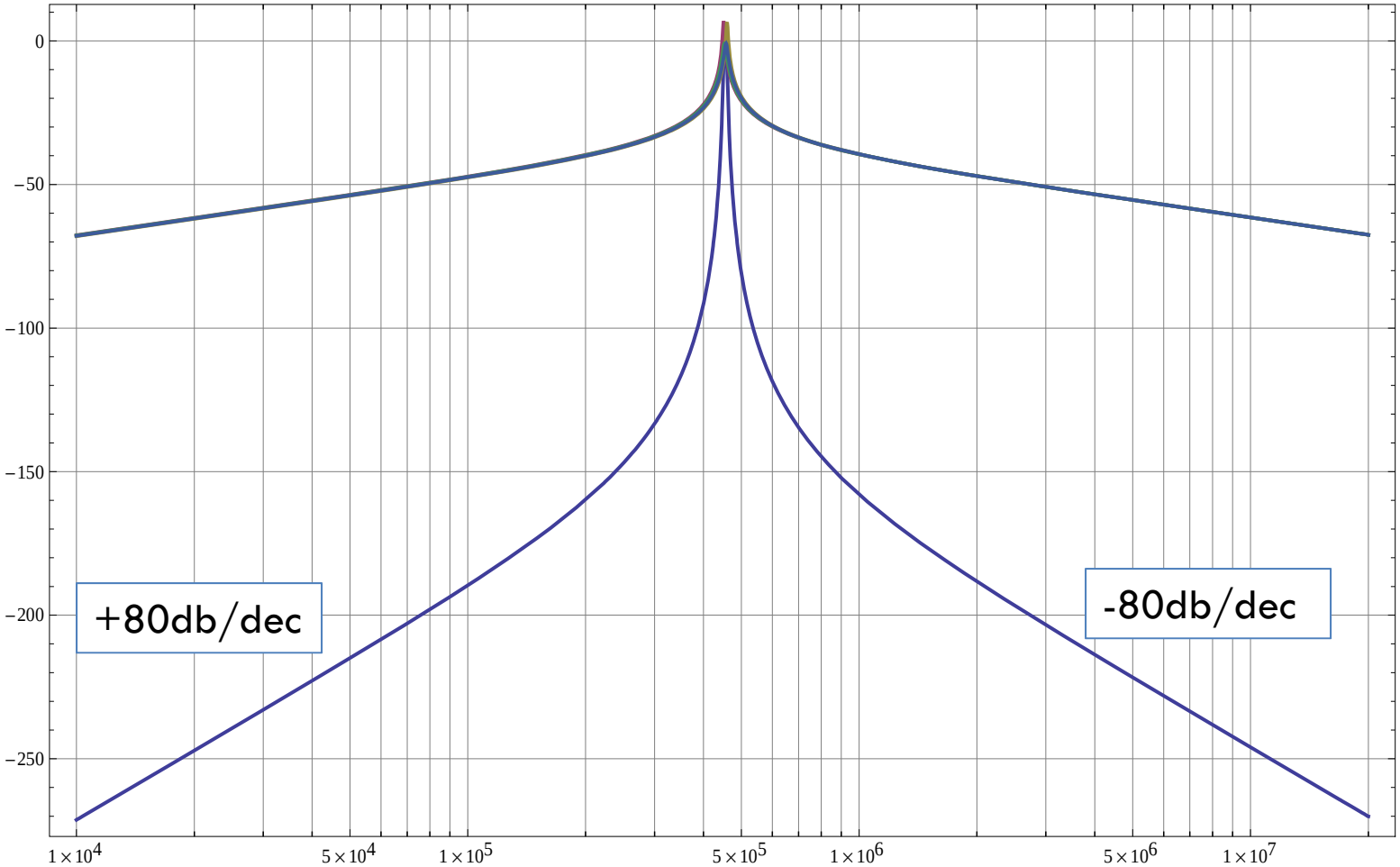

Bandpass Shape II

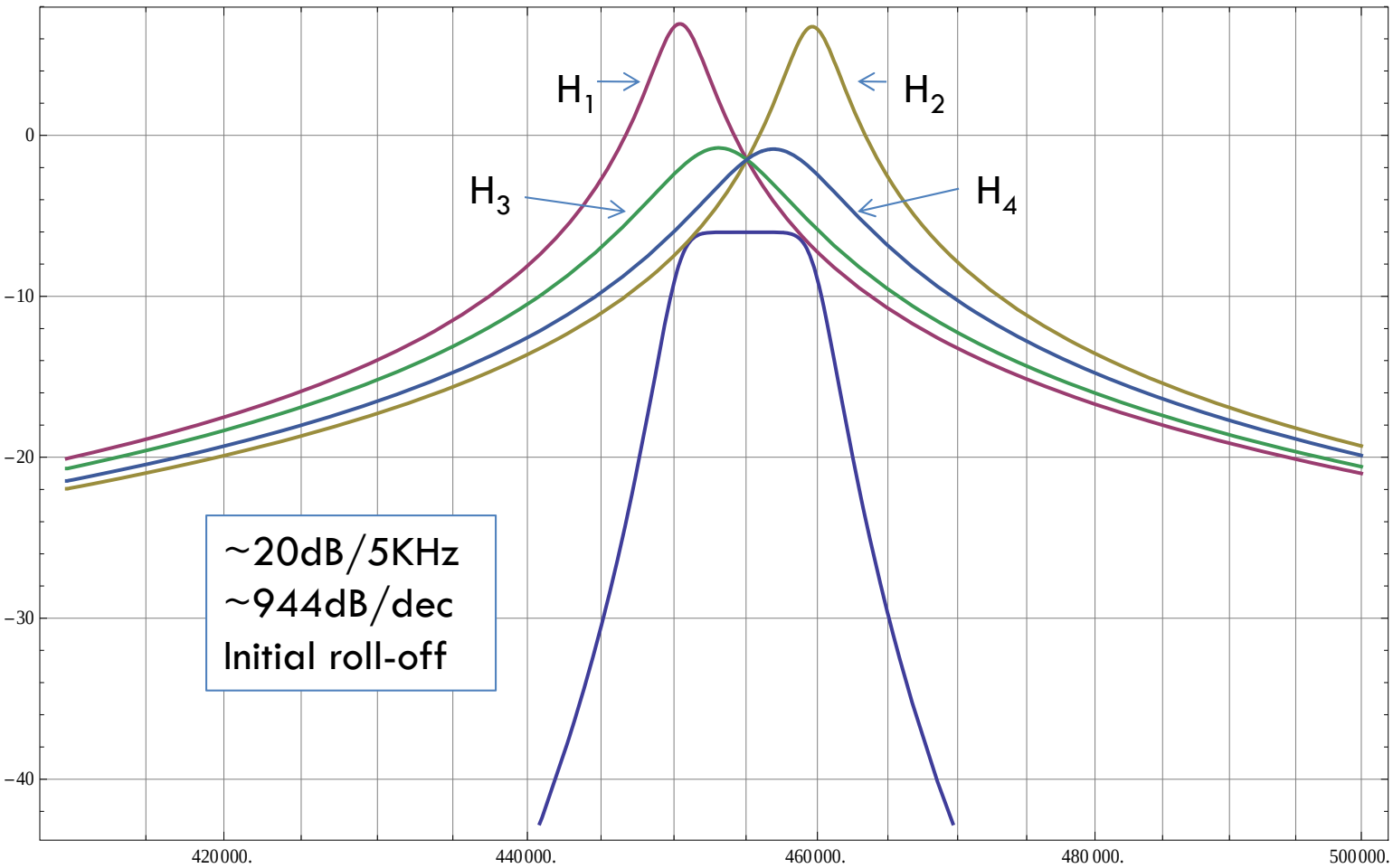

Bandpass Shape III

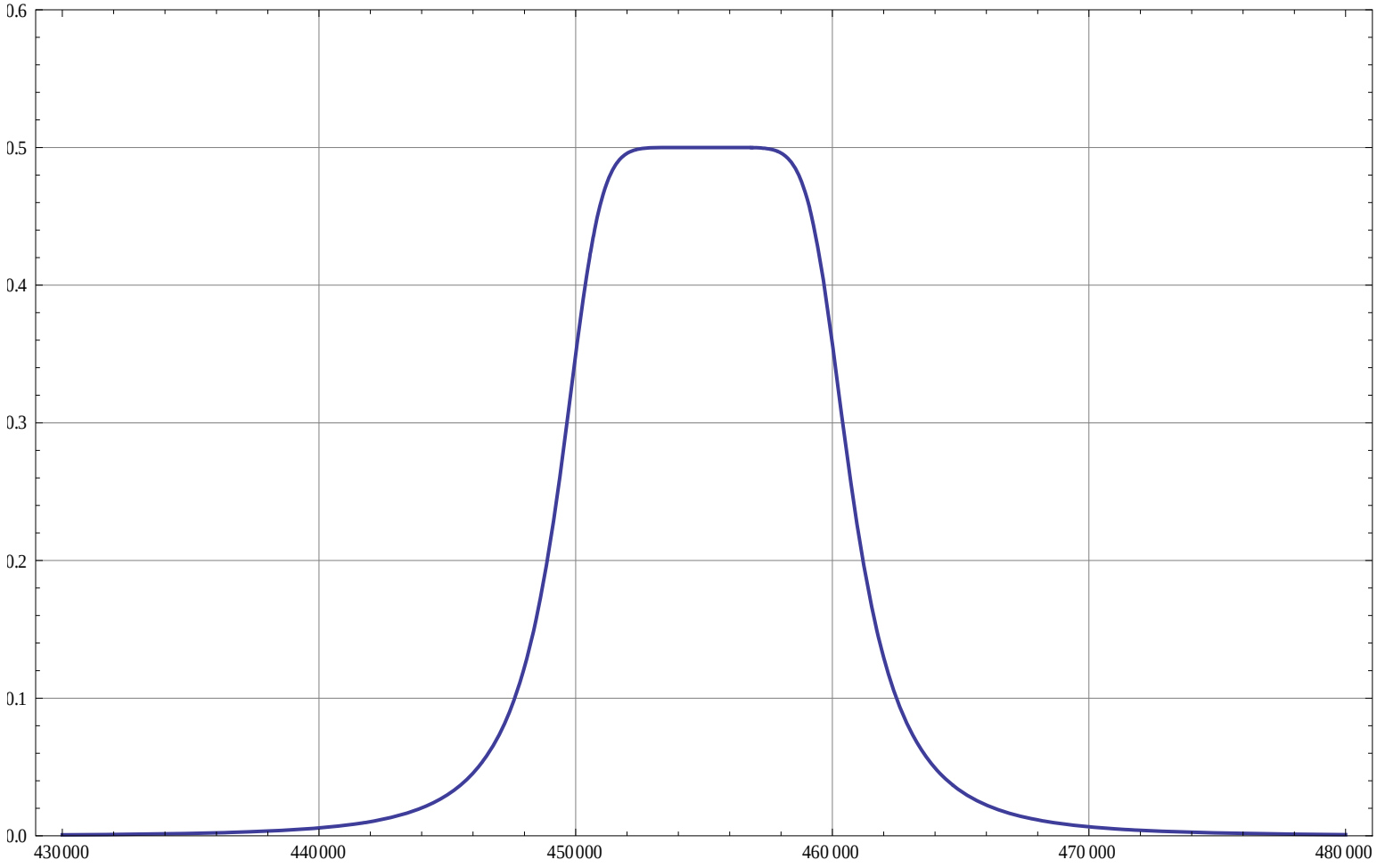

Passive Implementation

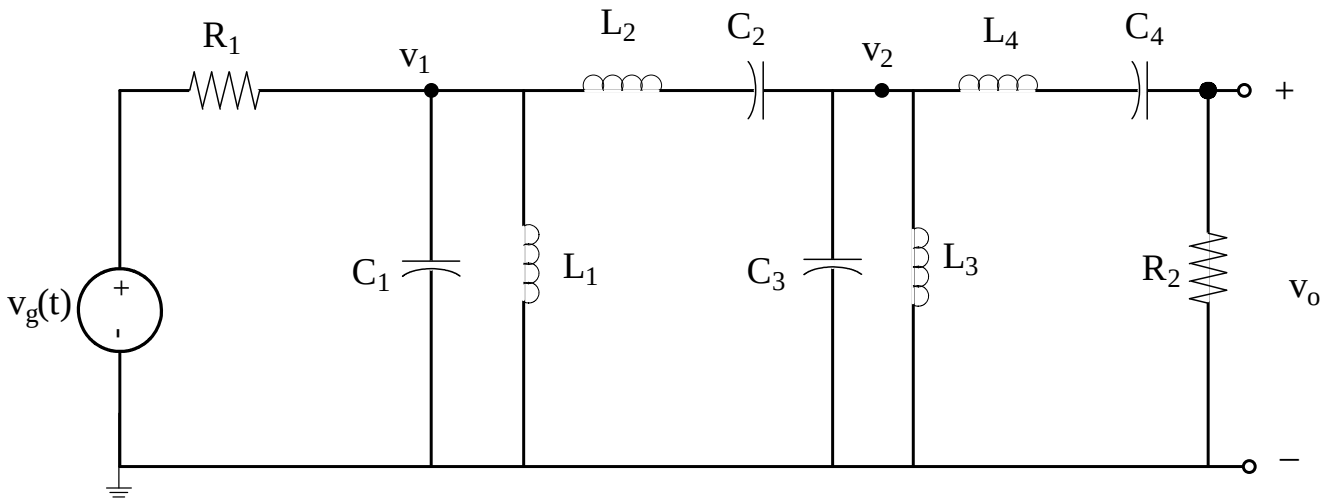

$$f_o = \frac{\omega_o}{2\pi} = \frac{1}{2\pi}\left[\frac{1}{L_i C_i}\right]^{1/2} = 455KHz \quad for\ i = 1,2,3,4$$

R1	50
C1	2.43634e-07
L1	5.02203e-07
L2	0.00147059
C2	8.32004e-11
C3	5.88237e-07
L3	2.08001e-07
L4	0.000609086
C4	2.00881e-10
R2	50

4th Order Butterworth Bandpass Filter Designed with application from http://www-users.cs.york.ac.uk/~fisher/

Analysis

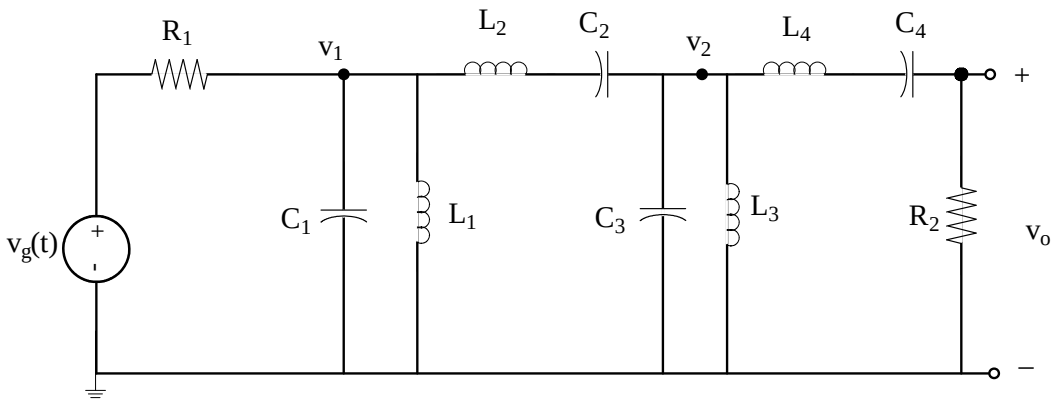
R1
v1
L2
C2
v2
L4
C4
+
C1
L1
C3
L3
R2
vo
vg(t)
+
−
−

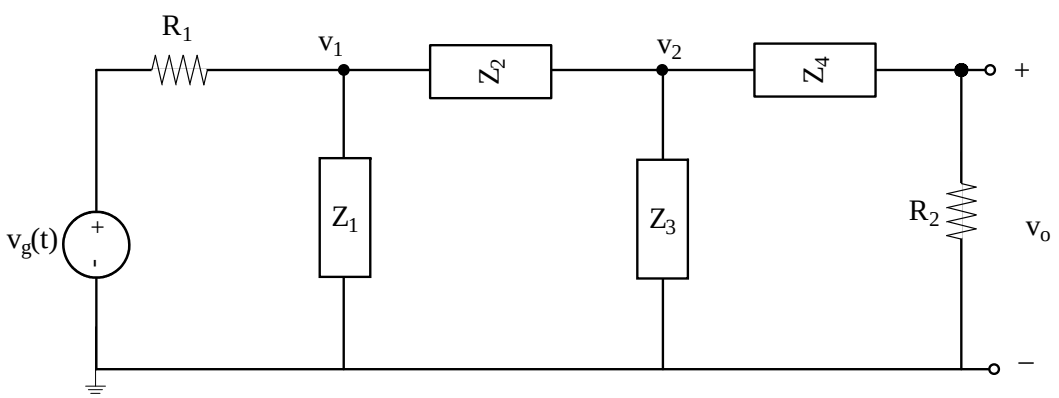
R1
v1
Z2
v2
Z4
+
Z1
Z3
R2
vo
vg(t)
+
−
−

Full Transfer Function

$$H(s)=(C_2C_4L_1L_3R_2s^4)/[R_1+(L_1+C_4R_1R_2)s+((C_1L_1+(C_3+C_4)L_3+C_2(L_1+L_2+L_3)+C_4L_4)R_1+C_4L_1R_2)s^2+(L_1(C_3L_3+C_2(L_2+L_3)+C_4(L_3+L_4))+C_4(C_1L_1+C_3L_3+C_2(L_1+L_2+L_3))R_1R_2)s^3+((C_2(C_3+C_4)(L_1+L_2)L_3+C_3C_4L_3L_4+C_2C_4(L_1+L_2+L_3)L_4+C_1L_1((C_3+C_4)L_3+C_2(L_2+L_3)+C_4L_4))R_1+C_4L_1(C_3L_3+C_2(L_2+L_3))R_2)s^4+(C_2L_1((C_3+C_4)L_2L_3+C_4(L_2+L_3)L_4)+C_2C_4(C_3(L_1+L_2)L_3+C_1L_1(L_2+L_3))R_1R_2+C_3C_4L_1L_3(L_4+C_1R_1R_2))s^5+(C_1L_1(C_2(C_3+C_4)L_2L_3+C_3C_4L_3L_4+C_2C_4(L_2+L_3)L_4)R_1+C_2C_3C_4L_3((L_1+L_2)L_4R_1+L_1L_2R_2))s^6+C_2C_3C_4L_1L_2L_3(L_4+C_1R_1R_2)s^7+C_1C_2C_3C_4L_1L_2L_3L_4R_1s^8]$$

Full Transfer Function

$$H(s)=\frac{(R2Z1Z3)}{\left[\begin{array}{l}R1R2Z1+R1R2Z2+R2Z1Z2+R1R2Z3+R1Z1Z3+\\R2Z1Z3+R1Z2Z3+Z1Z2Z3+R1Z1Z4+R1Z2Z4+\\Z1Z2Z4+R1Z3Z4+Z1Z3Z4\end{array}\right]}$$

$$=\frac{(C2C4L1L3R2s^4)}{\left[\begin{array}{l}(R1+(L1+C4R1R2)s+((C1L1+(C3+C4)L3+C2(L1+L2+L3)+C4L4)R1+C4L1R2)s^2+\\(L1(C3L3+C2(L2+L3)+C4(L3+L4))+C4(C1L1+C3L3+C2(L1+L2+L3))R1R2)s^3+\\((C2(C3+C4)(L1+L2)L3+C3C4L3L4+C2C4(L1+L2+L3)L4+C1L1((C3+C4)L3+\\C2(L2+L3)+C4L4))R1+C4L1(C3L3+C2(L2+L3))R2)s^4+\\(C2L1((C3+C4)L2L3+C4(L2+L3)L4)+C2C4(C3(L1+L2)L3+C1L1(L2+L3))R1R2+C3C4L1L3(L4+C1R1R2))s^5+\\(C1L1(C2(C3+C4)L2L3+C3C4L3L4+C2C4(L2+L3)L4)R1+C2C3C4L3((L1+L2)L4R1+L1L2R2))s^6+\\C2C3C4L1L2L3(L4+C1R1R2)s^7+C1C2C3C4L1L2L3L4R1s^8)\end{array}\right]}$$

Solving for component values

- Typically Choose R_1, R_2 (often $R_1=R_2$) Based On Desired Input/Output Impedance at Center Frequency
- 8 Circuit Parameters to Determine L_1-L_4, C_1-C_4
- 8 poles to match, but these are 4 conjugate pairs, so we have 4 unique magnitudes, 4 unique phases
- Some cleverness in finding the solution, but is just a 8 equations/8 unknown problem

Solving for component values II

From Desired Transfer Function:

$$H(s)=\frac{7.790037363446386\times10^{18}s^4}{\left[\begin{array}{l}4.462009998894575\times10^{51}+8.963334767889414\times10^{43}s+2.184675265547328\times10^{39}s^2+\\3.290623179261486\times10^{31}s^3+4.010099806424476\times10^{26}s^4+\\4.026201688608804\times10^{18}s^5+3.270556244124946\times10^{13}s^6+164180.56249913585s^7+s^8\end{array}\right]}$$

From Circuit Analysis:

$$H(s)=\frac{(C2C4L1L3R2s^4)}{\left[\begin{array}{l}(R1+(L1+C4R1R2)s+((C1L1+(C3+C4)L3+C2(L1+L2+L3)+C4L4)R1+C4L1R2)s^2+\\(L1(C3L3+C2(L2+L3)+C4(L3+L4))+C4(C1L1+C3L3+C2(L1+L2+L3))R1R2)s^3+\\((C2(C3+C4)(L1+L2)L3+C3C4L3L4+C2C4(L1+L2+L3)L4+C1L1((C3+C4)L3+\\C2(L2+L3)+C4L4))R1+C4L1(C3L3+C2(L2+L3))R2)s^4+\\(C2L1((C3+C4)L2L3+C4(L2+L3)L4)+C2C4(C3(L1+L2)L3+C1L1(L2+L3))R1R2+C3C4L1L3(L4+C1R1R2))s^5+\\(C1L1(C2(C3+C4)L2L3+C3C4L3L4+C2C4(L2+L3)L4)R1+C2C3C4L3((L1+L2)L4R1+L1L2R2))s^6+\\C2C3C4L1L2L3(L4+C1R1R2)s^7+C1C2C3C4L1L2L3L4R1s^8)\end{array}\right]}$$

$R1=R2=50\Omega$ by choice so

$$\left[\frac{R1}{C2C4L1L3R2}\right]=\left[\frac{4.462009998894575\times10^{51}}{7.790037363446386\times10^{18}}\right]$$

$$\left[\frac{(L1+C4R1R2)}{C2C4L1L3R2}\right]=\left[\frac{8.963334767889414\times10^{43}}{7.790037363446386\times10^{18}}\right]$$

etc.

Active Implementation

- 8th Order Bandpass Transfer Function
- Could Implement with 4 cascaded Sallen-Key (2nd order) bandpass filters tuned to each of the 4 conjugate pairs of poles

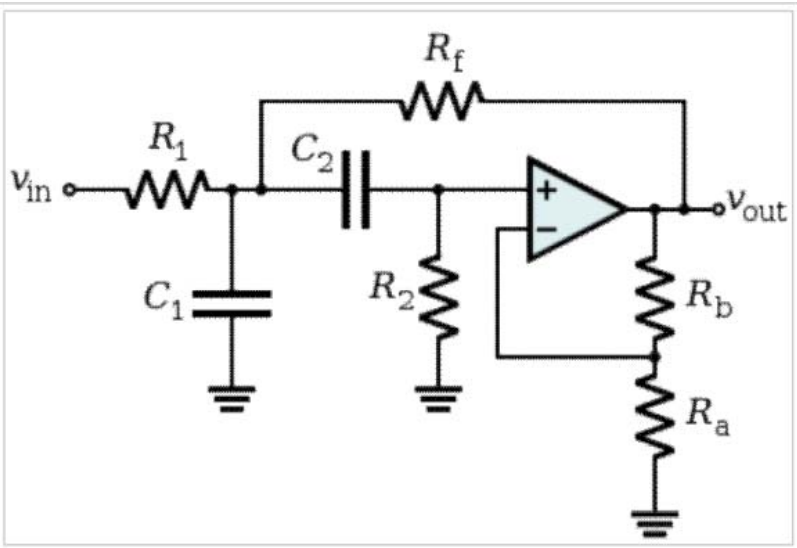

Figure 5: A bandpass filter realized with a VCVS topology.

$$H = \frac{V_{out}(s)}{V_{in}(s)}$$

$$= \frac{\overbrace{\left(1+\frac{R_b}{R_a}\right)\frac{1}{C_1R_1}}^{2\zeta\omega_0 G} s}{\underbrace{\left(\frac{\frac{R_1}{R_f}+1}{C_1C_2R_1R_2}\right)}_{\omega_0^2} + \underbrace{\left(\frac{1}{C_1R_1}+\frac{1}{C_1R_2}+\frac{1}{C_2R_2}-\frac{R_b}{C_1R_aR_f}\right)}_{2\zeta\omega_0=\frac{\omega_0}{Q}} s + s^2}$$

Analysis

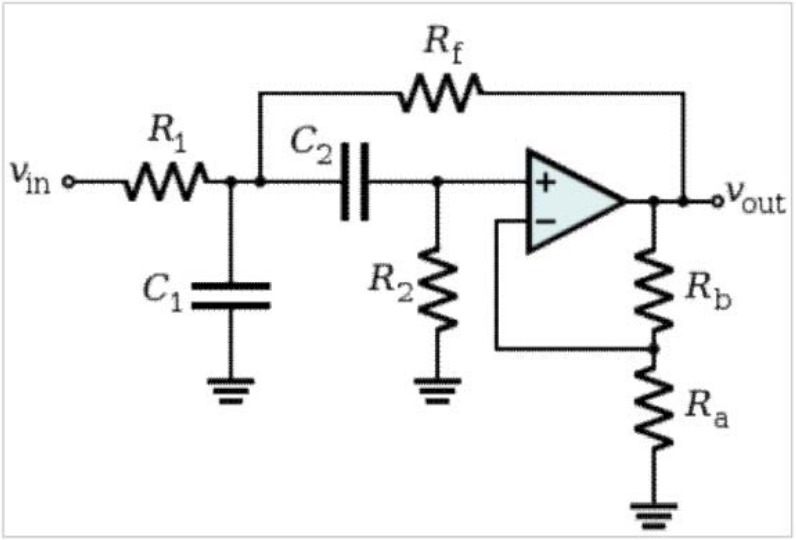

Figure 5: A bandpass filter realized with a VCVS topology.

Bode Plot

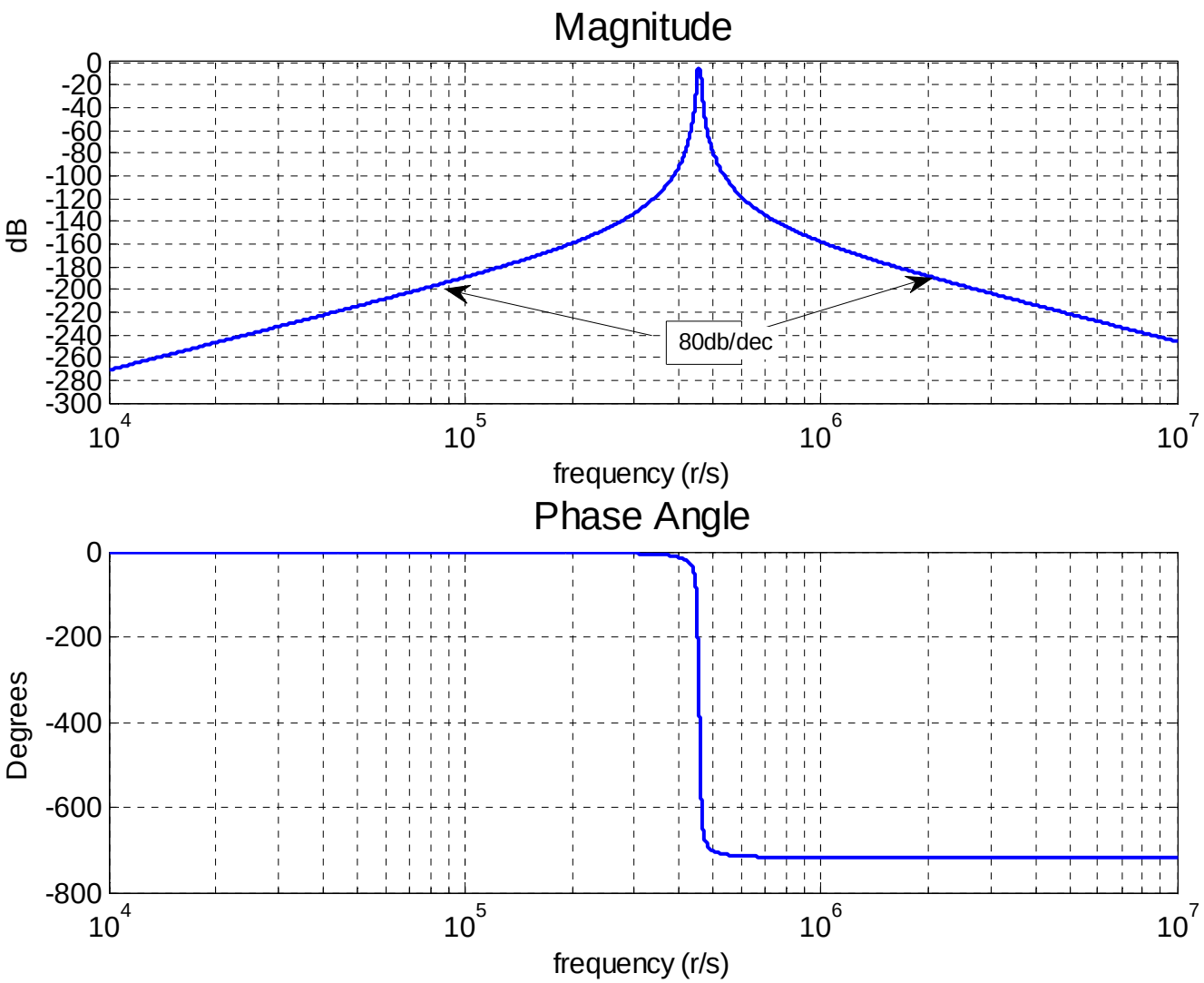
Magnitude
dB
0
-20
-40
-60
-80
-100
-120
-140
-160
-180
-200
-220
-240
-260
-280
-300
80db/dec
10^4
10^5
10^6
10^7
frequency (r/s)
Phase Angle
Degrees
0
-200
-400
-600
-800
10^4
10^5
10^6
10^7
frequency (r/s)

Bode Plot Magnified

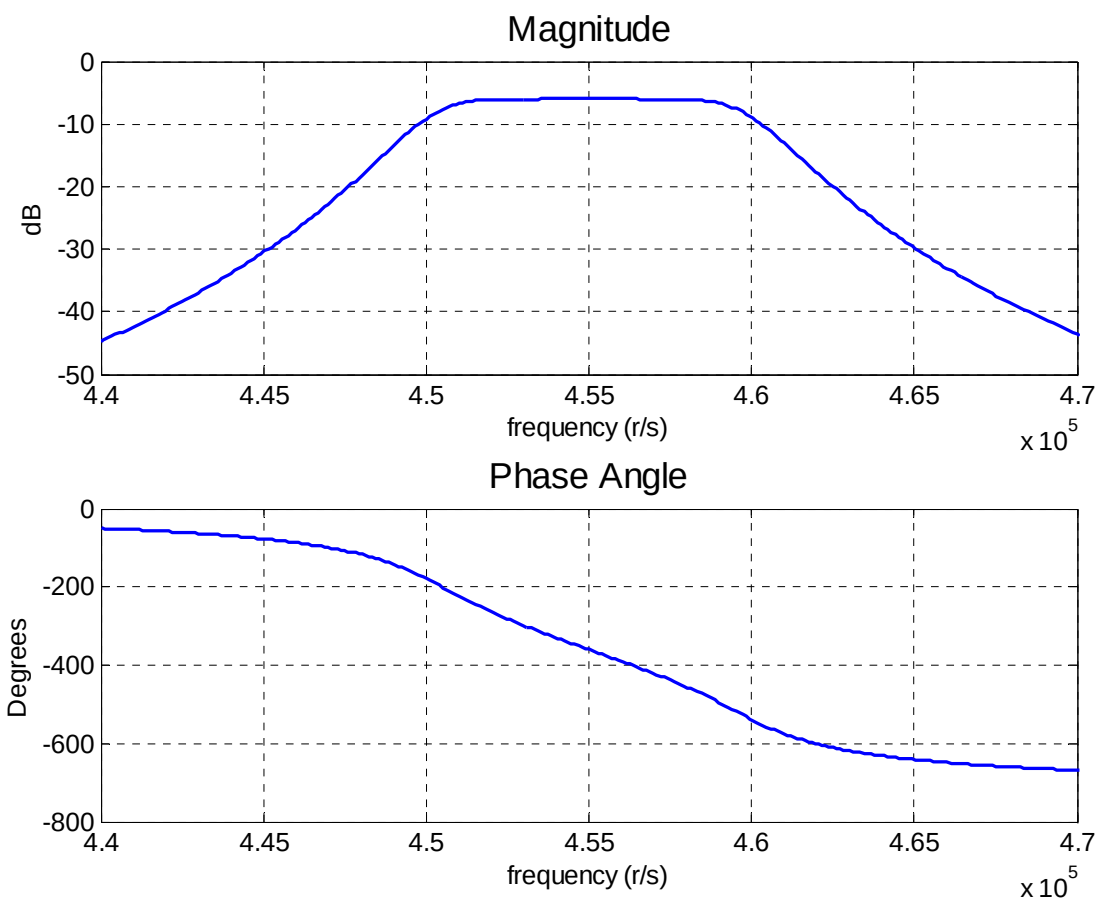

Group delay

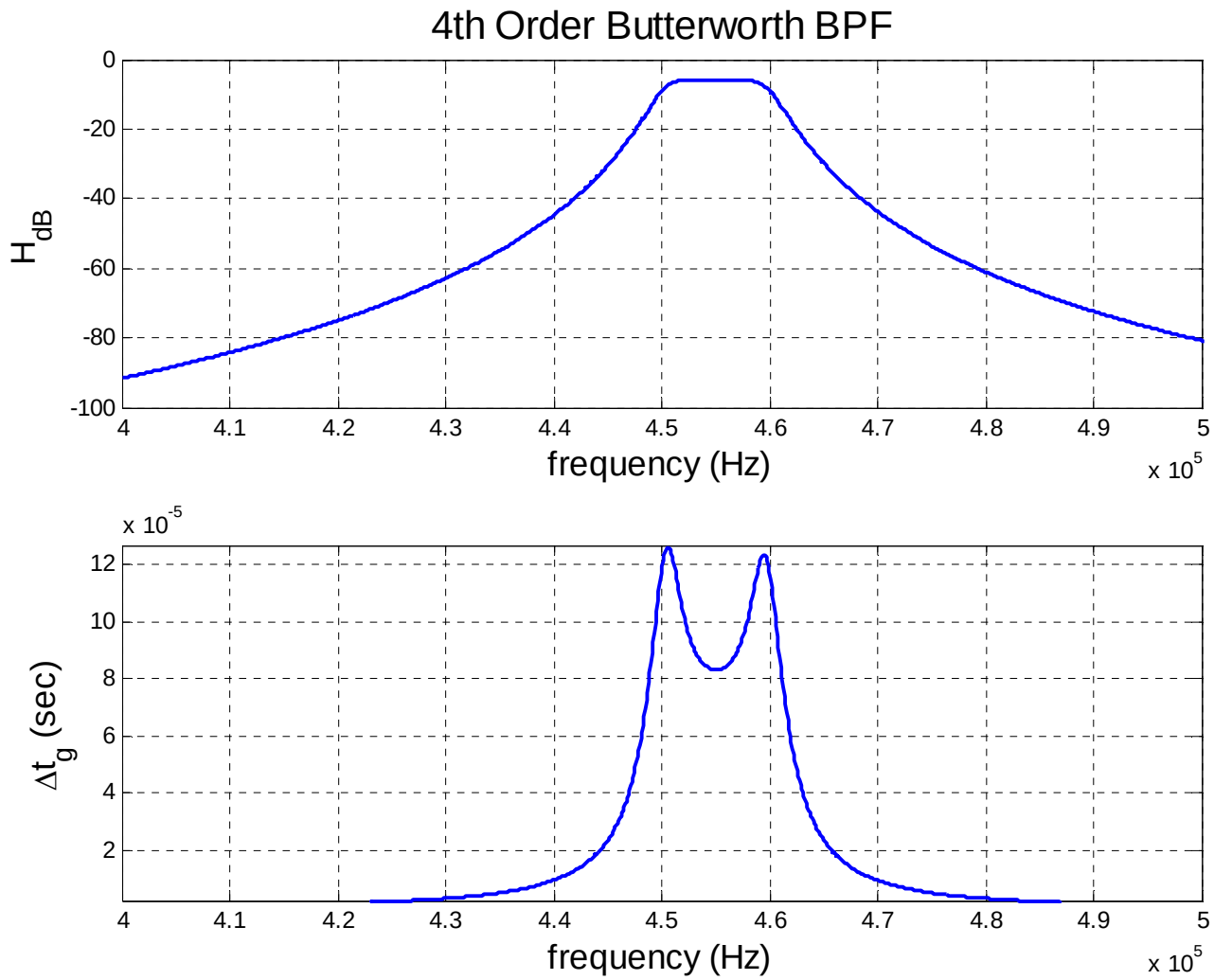
4th Order Butterworth BPF
0
-20
-40
-60
-80
-100
H_{dB}
4
4.1
4.2
4.3
4.4
4.5
4.6
4.7
4.8
4.9
5
frequency (Hz)
x 10^5
x 10^{-5}
12
10
8
6
4
2
Δt_g (sec)
4
4.1
4.2
4.3
4.4
4.5
4.6
4.7
4.8
4.9
5
frequency (Hz)
x 10^5

Simple Demodulator: Diode&LPF

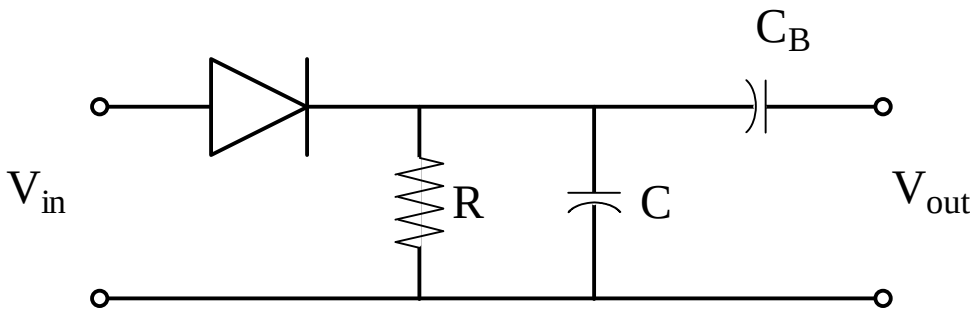

$$\frac{1}{2\pi f_c} \ll RC \ll \frac{1}{2\pi f_{sig}}$$

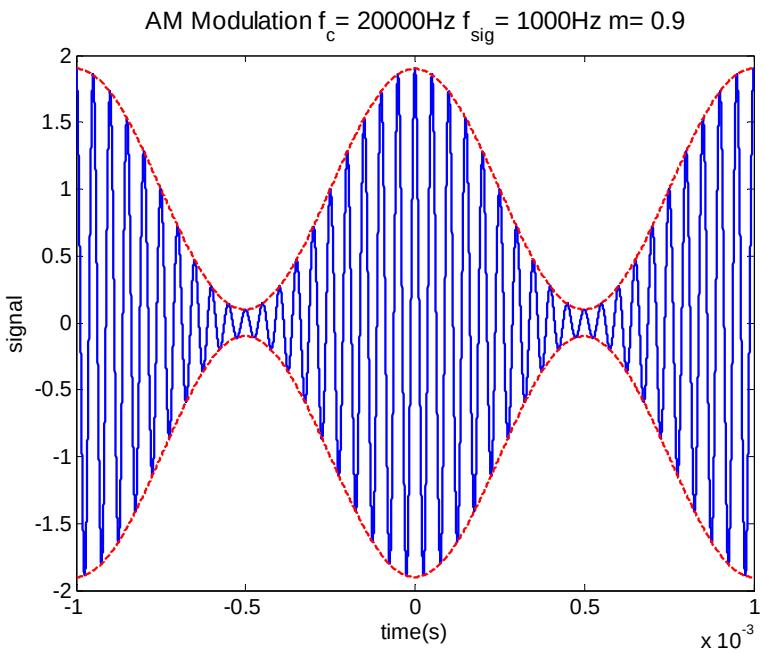

Precision Diode

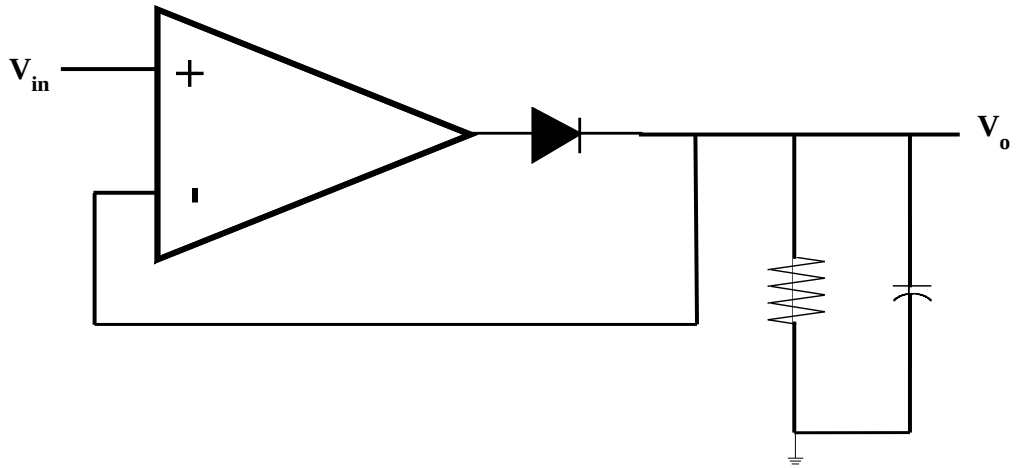

Automatic Gain Control

- Various Effects Will Lead to Signal Strength Varying with Time
- System to This Point Will Lead Varying Received Signal (Volume)
- How To Correct? Automatic Gain Control (AGC)

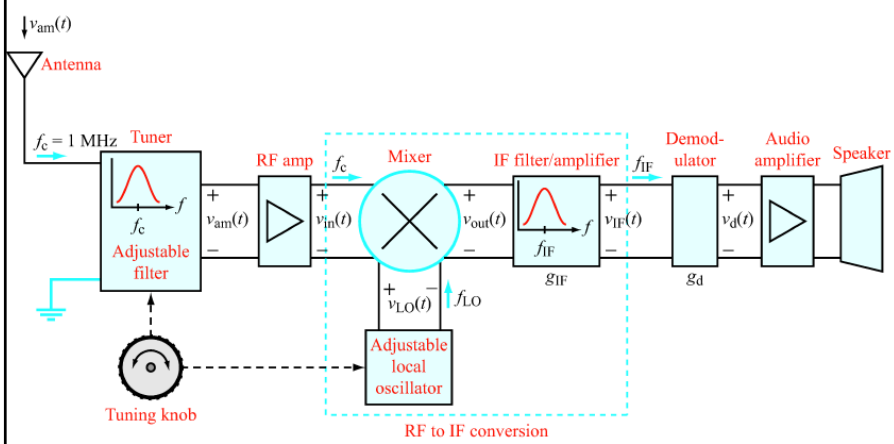

Figure 9-30: Block diagram of superheterodyne receiver.

AGC: One Approach

- High Q filter in IF Stage to Measure Carrier Strength (a_0)
- Adjust IF Amp Gain to Maintain Desired Level

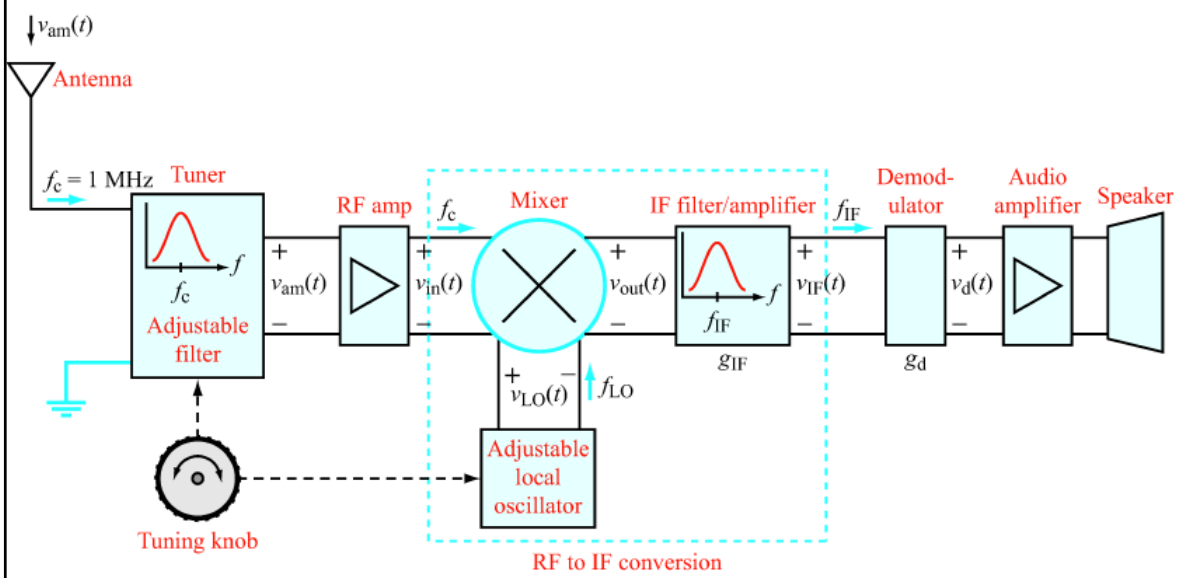

Figure 9-30: Block diagram of superheterodyne receiver.