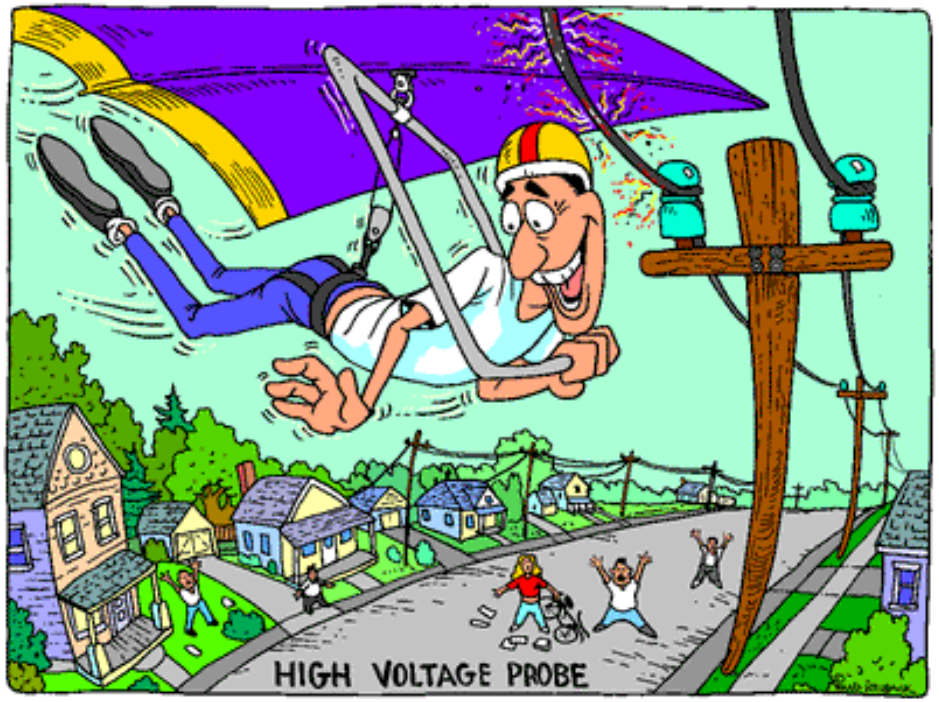

NODAL ANALYSIS II: VOLTAGE SOURCES AND SUPER-NODES, MODIFIED NODAL ANALYSIS

© Fred Terry
Fall, 2013

Nodal Analysis Summary to Date

- Nodal Analysis is based on KCL
- Resistors: If We Know The Voltage Drop, We Know the Current
- Current Sources: We Know the Current
  - All We Need to know for KCL
  - We Do Not Know the Voltage Drop, but Can Get It Once We Know the Node Voltages
- Voltage Sources: We Know The Voltage Drop
  - We Do Not Know the Current Hence
    - We Must Include It As Another Variable for KCL, or
    - We Must Find a Clever Way Around The Unknown Problem

What Do We Do With Voltage Sources?

- Brute Force: Modified Nodal Analysis (generalization of classical nodal analysis and the basis for SPICE)
- More Elegant and Numerically Efficient: Supernodes

Modified Nodal Analysis

- Define one node of the circuit as the reference node or Ground. Consider this voltage as zero. Call it node 0 or ground.
- Label the non-ground nodes 1 to n-1 (for an n-node circuit). We will calculate the Node Voltages (the potential differences between each of these nodes and ground.
- For Voltage Sources:
  - Label the known current associated with each source
  - Write one KVL equation for each voltage source
- Use KCL and Ohm's Law to write KCL equations at each of the n-1 non-reference nodes. Include the unknown currents for each voltage source. This generates the n-1 simultaneous equations for the n-1 node voltages, plus a KVL expression for each voltage source
- Each Dependent Source will also add exactly one equation (sometimes trival)
- Solve the simultaneous KCL/Nodal Equations for V_1 to V_{n-1}, the node voltages, the unknown currents for each voltage source, and the controlling variables for each dependent source

Modified Nodal Analysis Example

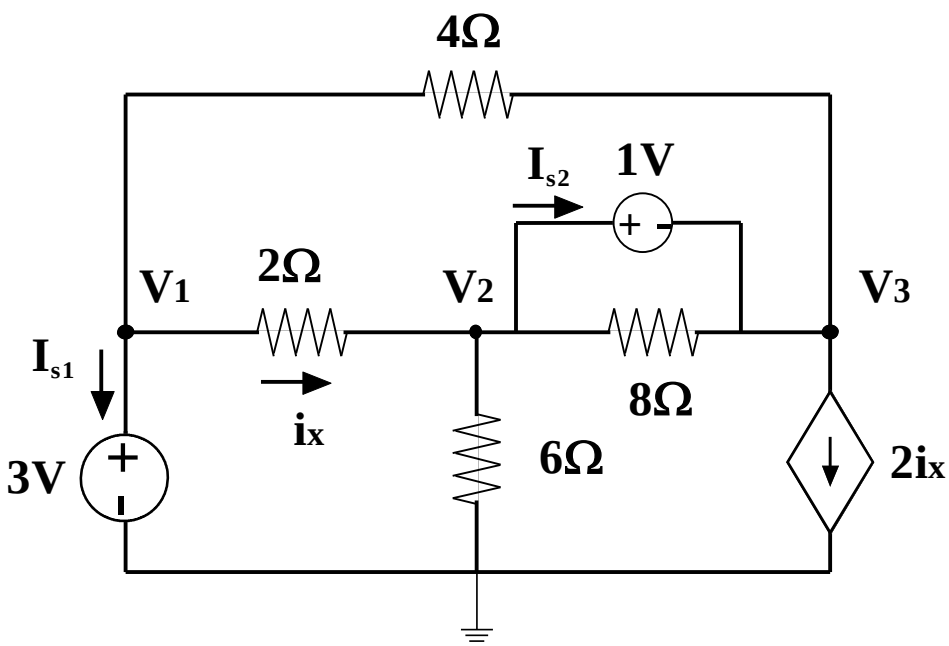

Modified Nodal Analysis Example

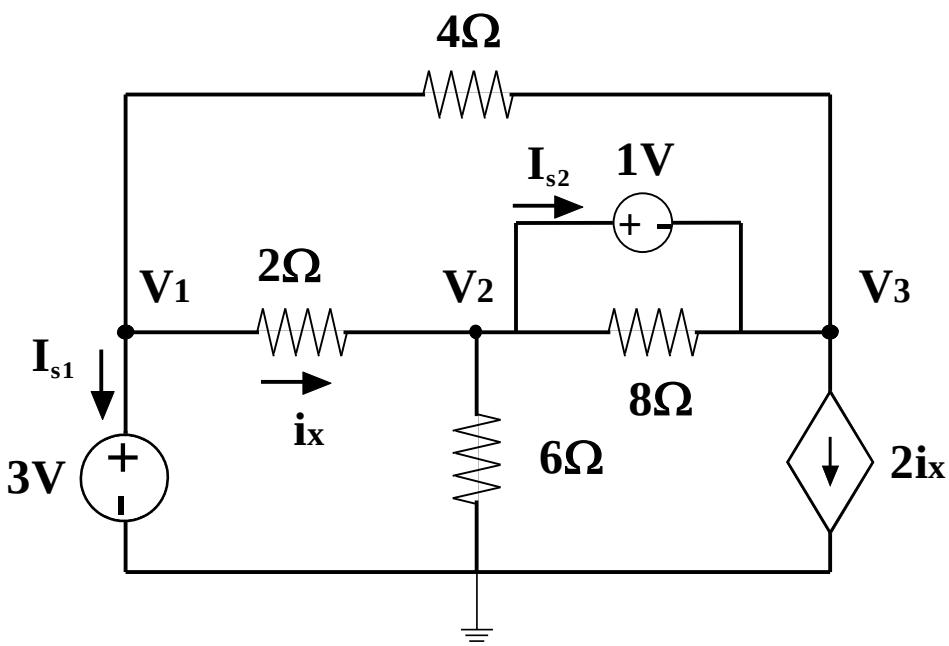

Solution Using Mathematica

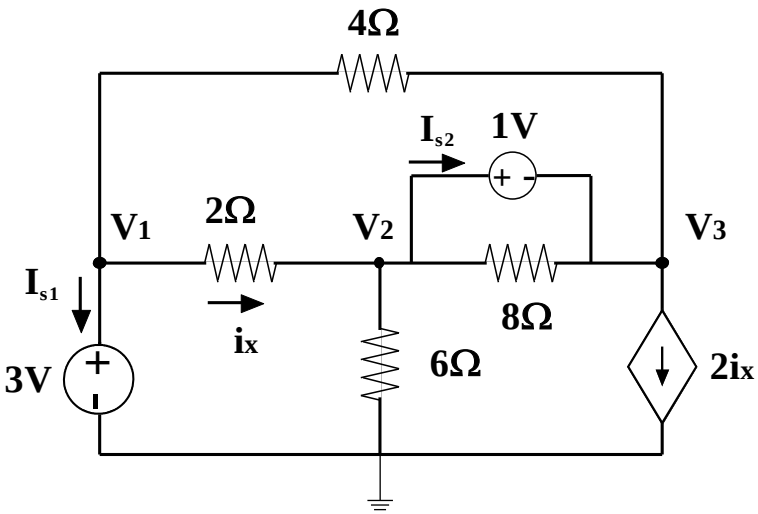


```
In[57]:= Clear [v1, v2, v3, ix, is1, is2]
In[58]:= kcl1 = is1 + (v1 - v2)/2 + (v1 - v3)/4
Out[58]= is1 + (v1 - v2)/2 + (v1 - v3)/4
In[59]:= kcl2 = (v2 - v1)/2 + v2/6 + is2 + (v2 - v3)/8
Out[59]= is2 + v2/6 + 1/2 (-v1 + v2) + (v2 - v3)/8
In[60]:= kcl3 = -is2 + (v3 - v1)/4 + 2*ix + (v3 - v2)/8
Out[60]= -is2 + 2 ix + 1/4 (-v1 + v3) + 1/8 (-v2 + v3)
In[61]:= kvl1 = v1 - 3
Out[61]= -3 + v1
In[62]:= kvl2 = v2 - v3 - 1
Out[62]= -1 + v2 - v3
In[63]:= ix = (v1 - v2)/2
Out[63]= (v1 - v2)/2
In[64]:= Solve[{kcl1 == 0, kcl2 == 0, kcl3 == 0, kvl1 == 0,
  kvl2 == 0}, {v1, v2, v3, is1, is2}]
Out[64]= {{v1 -> 3, v2 -> 6, v3 -> 5, is1 -> 2, is2 -> -(21/8)}}
```

Multisim Circuit

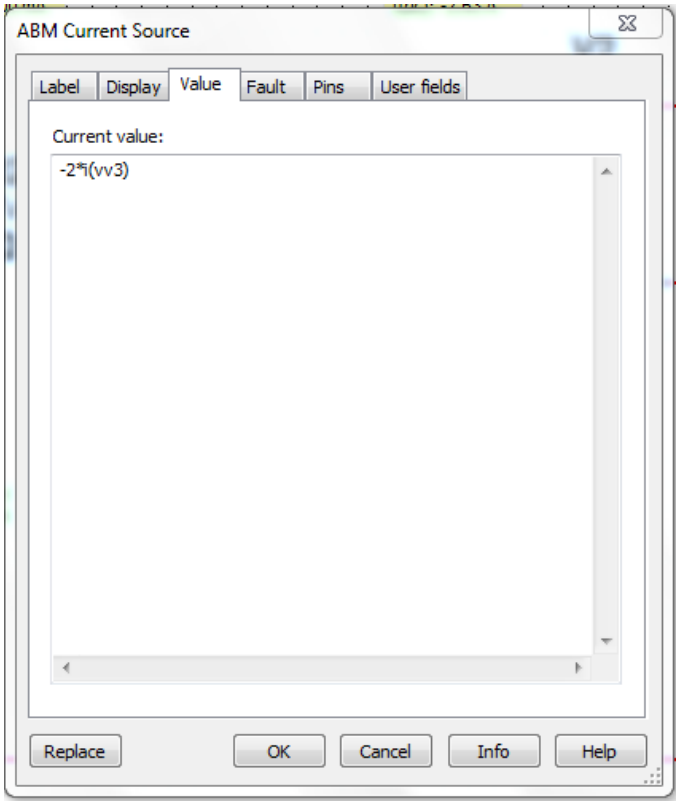

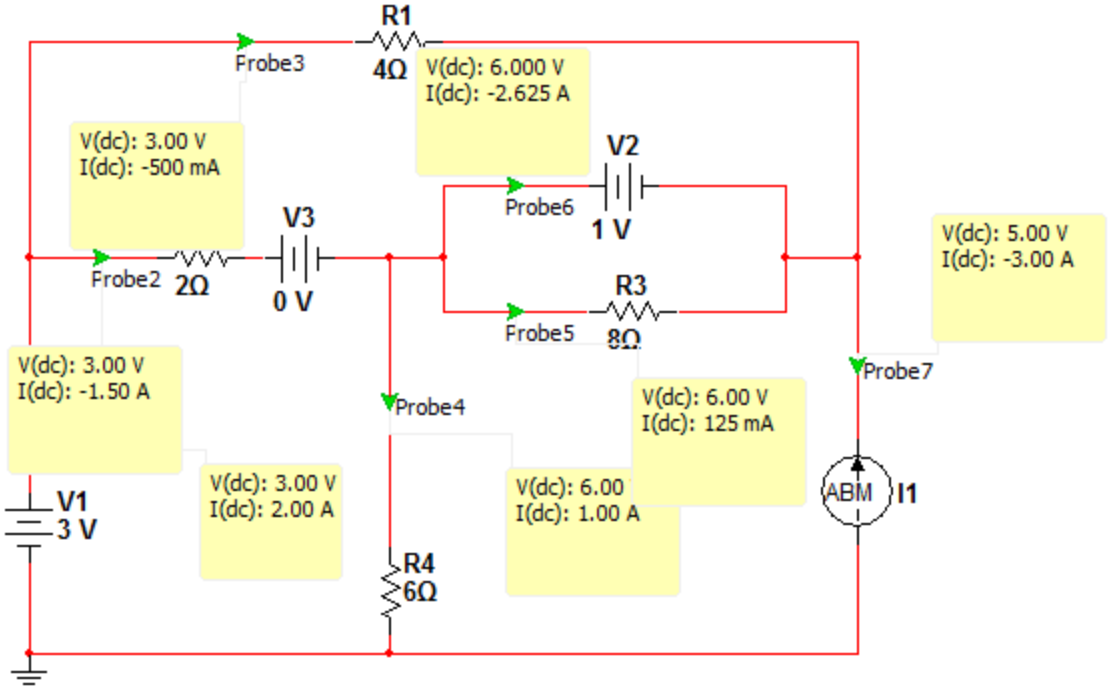

Classical/More Elegant Approach

Do Not Find Currents Associated With Voltage Sources Unless You Need This Information

Two Cases:

- Voltage Source Between Reference/Ground and 2nd Node
- Voltage Source Between 2 Non-Reference Nodes
  - Supernode

Nodal Analysis Example: Voltage Source to Ground

- Find all the node voltages in the circuit at left
- Label the Non-trivial nodes
- Write KCL equations at each labeled node
- Solve the resulting system of linear equations

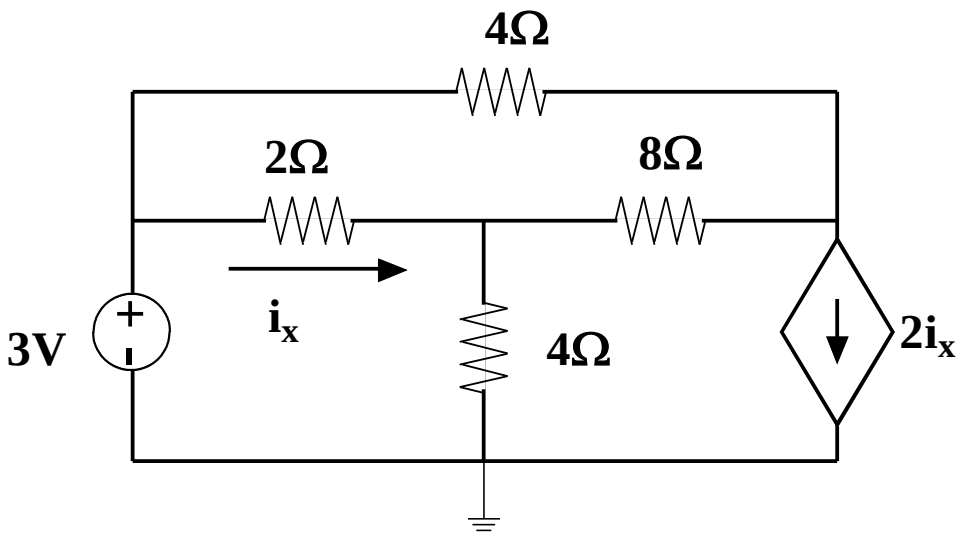

Label Nodes &Write KCL Equations

- V_1=3V
  - NO KCL EQUATION FOR THIS NODE
  - WHY????

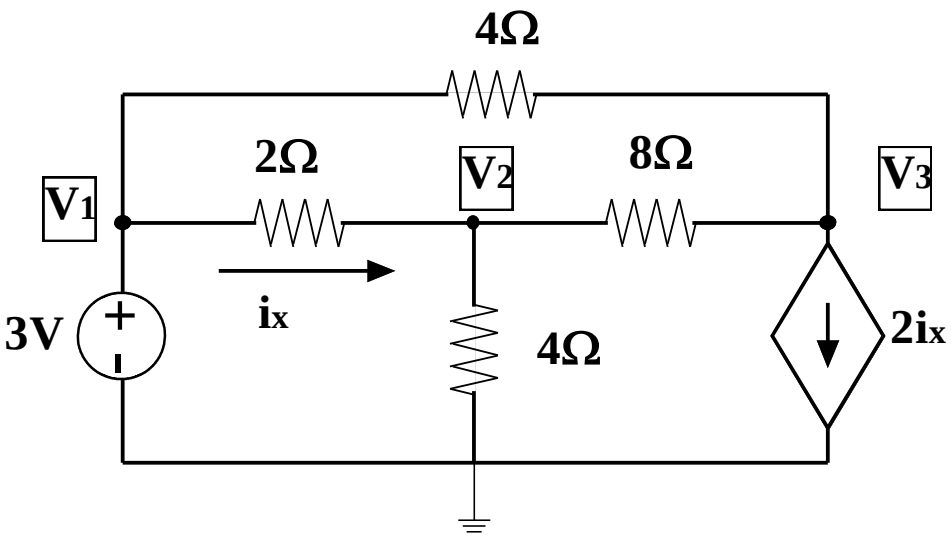

KCL Equations for Other 2 Nodes

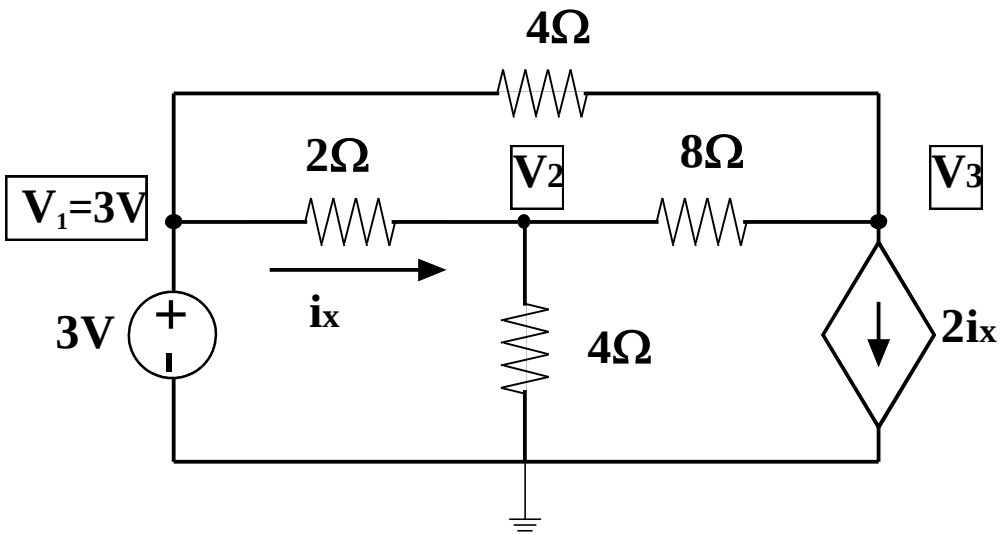

KCL Equations for Other 2 Nodes

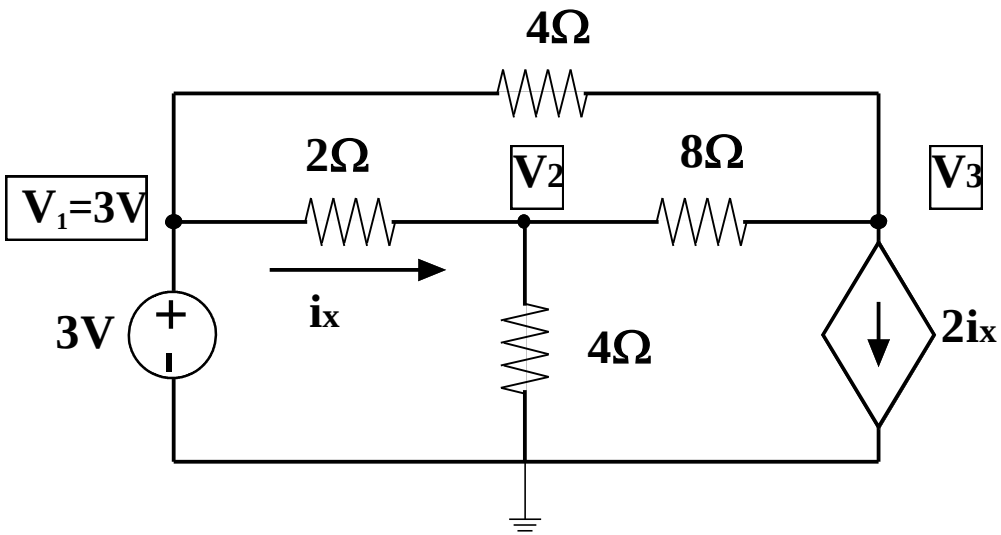

KCL Equations for Other 2 Nodes

KCL: Node 2

$$V_2\left[\frac{1}{2\Omega}+\frac{1}{4\Omega}+\frac{1}{8\Omega}\right]+V_3\left[-\frac{1}{8\Omega}\right]=V_1\left[\frac{1}{2\Omega}\right]=1.5A$$

KCL: Node 3

$$V_2\left[\frac{-1}{8\Omega}\right]+V_3\left[\frac{1}{8\Omega}+\frac{1}{4\Omega}\right]+2i_x=V_1\left[\frac{1}{4\Omega}\right]=0.75A$$

$$i_x=\left[\frac{V_1-V_2}{2\Omega}\right]=1.5A-\left[\frac{V_2}{2\Omega}\right]$$

combining

$$V_2\left[\frac{-1}{8\Omega}+\frac{-1}{1\Omega}\right]+V_3\left[\frac{1}{8\Omega}+\frac{1}{4\Omega}\right]=-2.25A$$

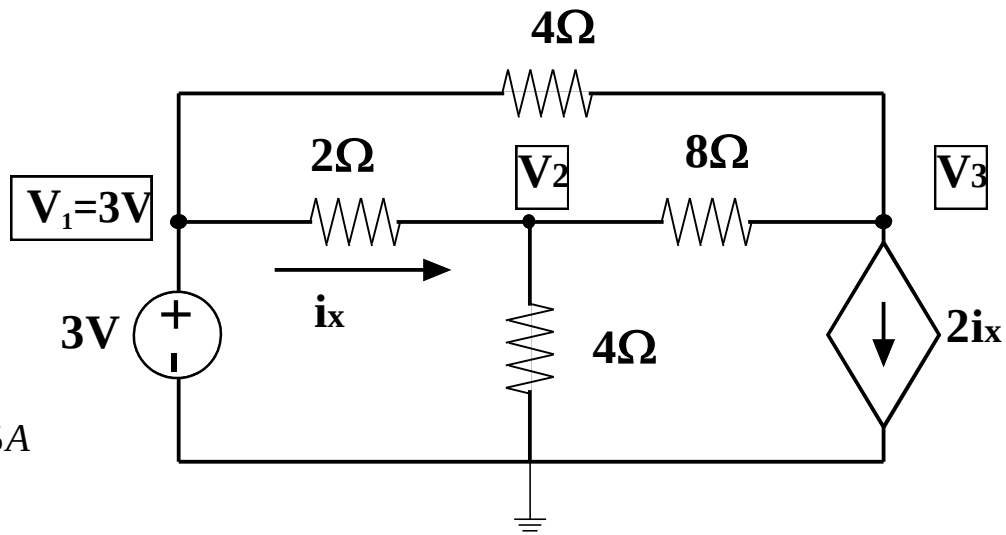

Collect Equations and Solve

$$\left(0.875\Omega^{-1}\right)V_2 + \left(-0.125\Omega^{-1}\right)V_3 = 1.5A$$

$$\left(-1.125\Omega^{-1}\right)V_2 + \left(+0.0.375\Omega^{-1}\right)V_3 = -2.25A$$

- 2 Nodal Equations with the 2 NODE VOLTAGES AS THE ONLY UNKNOWNS
- Answers:
  - V_2= +1.5V
  - V_3= -1.5V

Derive Current Flows

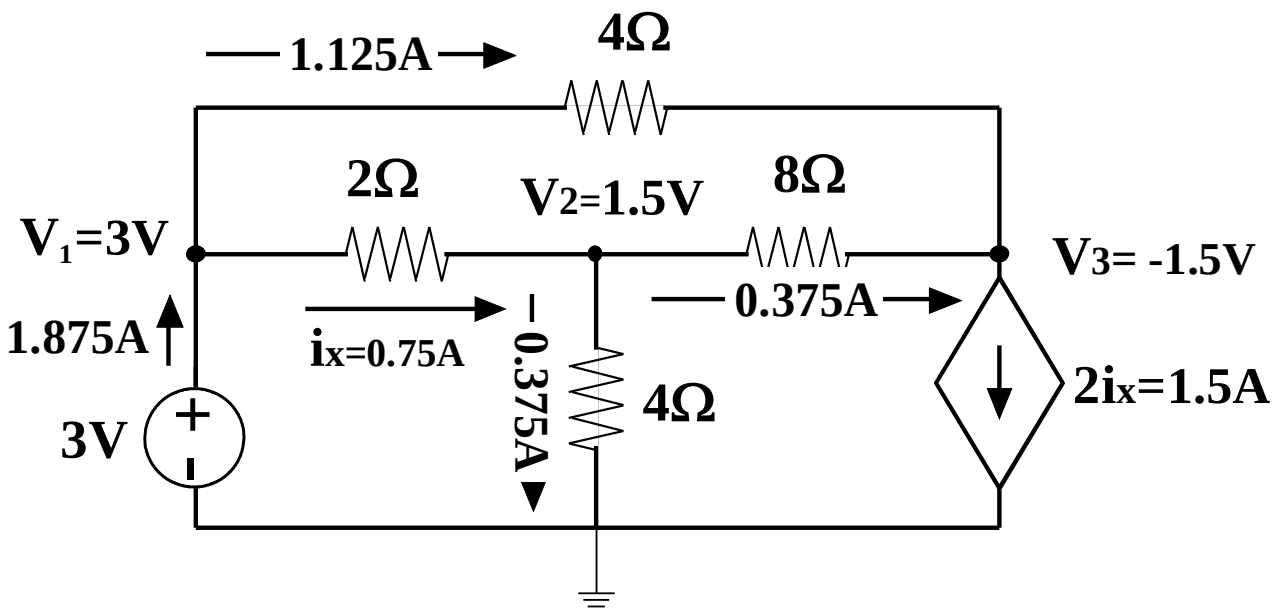

Extension: Equivalent Circuit Modeling

- Model the Circuit "seen" at nodes a&b
- V-I Characteristics

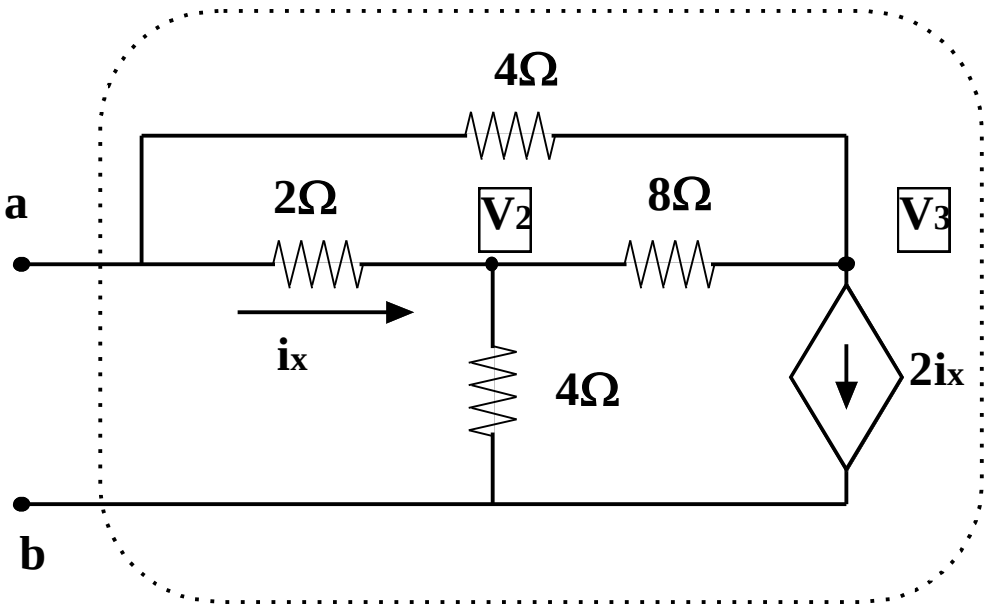

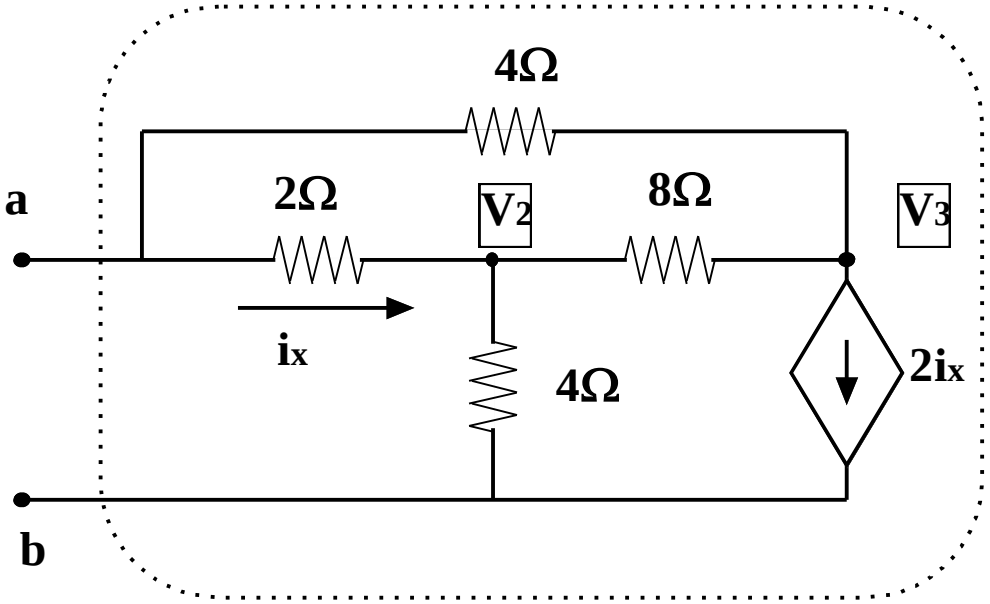
4Ω
a
2Ω
V2
8Ω
V3
ix
4Ω
2ix
b

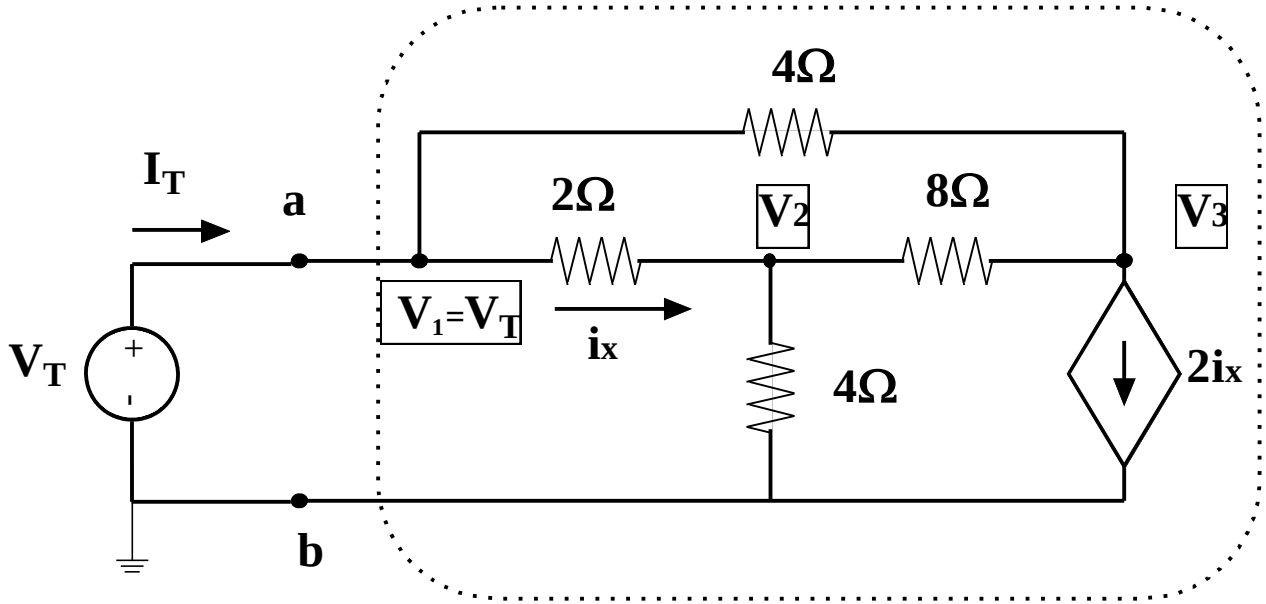

KCL: Node 2

$$V_2\left[\frac{1}{2\Omega}+\frac{1}{4\Omega}+\frac{1}{8\Omega}\right]+V_3\left[-\frac{1}{8\Omega}\right]=V_1\left[\frac{1}{2\Omega}\right]=V_T\left[\frac{1}{2\Omega}\right]$$

KCL: Node 3

$$V_2\left[\frac{-1}{8\Omega}\right]+V_3\left[\frac{1}{8\Omega}+\frac{1}{4\Omega}\right]+2i_x=V_1\left[\frac{1}{4\Omega}\right]=V_T\left[\frac{1}{4\Omega}\right]$$

$$i_x=\left[\frac{V_1-V_2}{2\Omega}\right]=\left[\frac{V_T-V_2}{2\Omega}\right]$$

combining

$$V_2\left[\frac{-1}{8\Omega}+\frac{-1}{1\Omega}\right]+V_3\left[\frac{1}{8\Omega}+\frac{1}{4\Omega}\right]=V_T\left[-\frac{3}{4\Omega}\right]$$

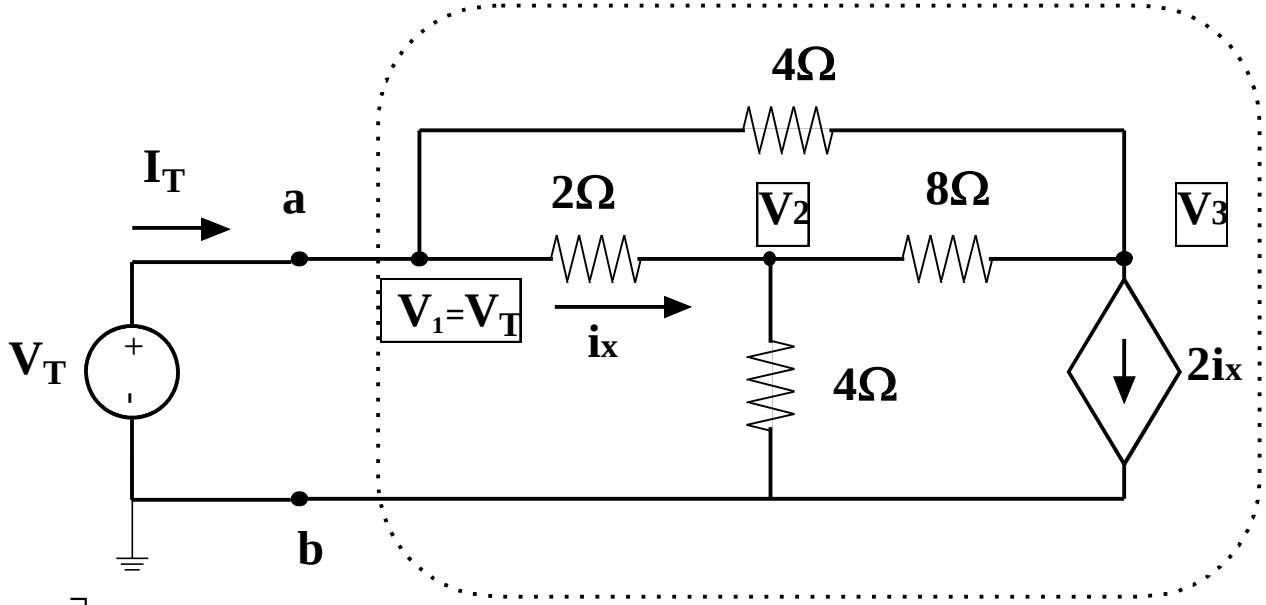

$$\underbrace{\begin{bmatrix} 7/8 & -1/8 \\ -9/8 & 3/8 \end{bmatrix}}_{\Omega^{-1}} \begin{bmatrix} V_2 \\ V_3 \end{bmatrix} = \underbrace{\begin{bmatrix} 1/2 \\ -3/4 \end{bmatrix}}_{\Omega^{-1}} V_T$$

$$\begin{bmatrix} V_2 \\ V_3 \end{bmatrix} = \begin{bmatrix} 0.5 \\ -0.5 \end{bmatrix} V_T$$

$$I_T = \left(\frac{V_T - V_2}{2\Omega} \right) + \left(\frac{V_T - V_3}{4\Omega} \right) = \left(\frac{V_T - 0.5V_T}{2\Omega} \right) + \left(\frac{V_T - \left(-0.5V_T\right)}{4\Omega} \right)$$

$$I_T = \frac{2.5}{4\Omega} V_T = \frac{5}{8\Omega} V_T$$

$$\mathrm{R}_{eq} = \frac{V_T}{I_T} = \frac{8}{5}\Omega = 1.6\Omega$$

Looks Like A Linear Resistor!

Variation: Change One Resistor

KCL: Node 2

$$V_2\left[\frac{1}{2\Omega}+\frac{1}{6\Omega}+\frac{1}{8\Omega}\right]+V_3\left[-\frac{1}{8\Omega}\right]=V_1\left[\frac{1}{2\Omega}\right]=1.5A$$

KCL: Node 3

$$V_2\left[\frac{-1}{8\Omega}\right]+V_3\left[\frac{1}{8\Omega}+\frac{1}{4\Omega}\right]+2i_x=V_1\left[\frac{1}{4\Omega}\right]=0.75A$$

$$i_x=\left[\frac{V_1-V_2}{2\Omega}\right]=1.5A-\left[\frac{V_2}{2\Omega}\right]$$

combining

$$V_2\left[\frac{-1}{8\Omega}+\frac{-1}{1\Omega}\right]+V_3\left[\frac{1}{8\Omega}+\frac{1}{4\Omega}\right]=-2.25A$$

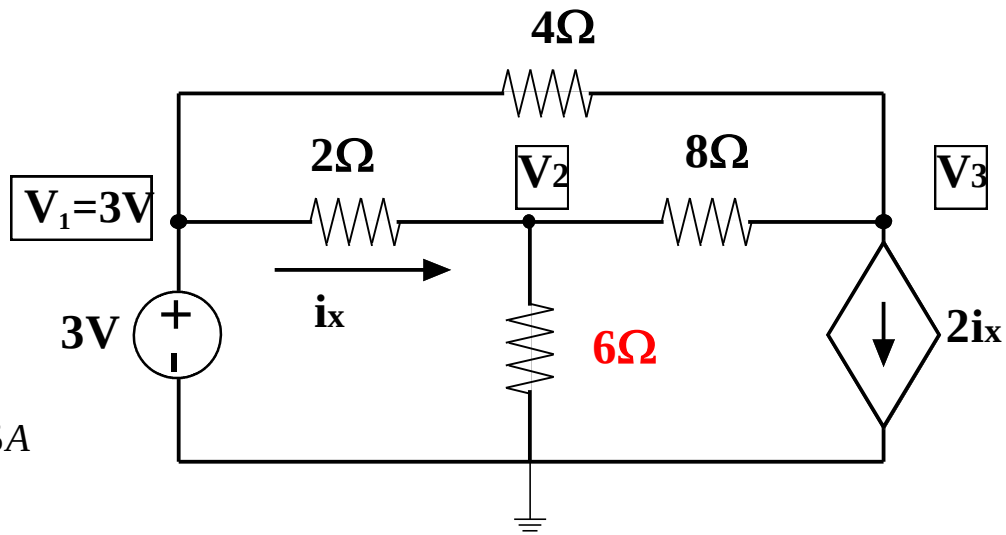

Results:

V_2=+1.8V

V_3=-0.6V

Case 2: Super-Node

- 2nd Voltage Source is not connected to ground
- Nodes 2&3 Now Linked as "Supernode"
- Only 1 Independent Node Voltage
  - V_2-V_3=1V
- Only 1 Meaningful KCL Equation for Combined 2-3 Supernode

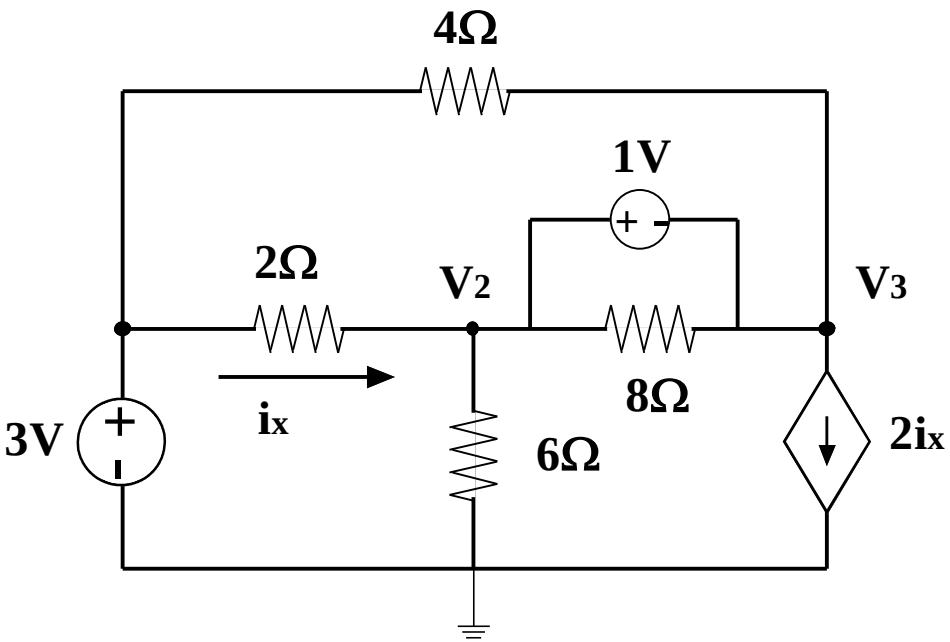

KCL at Super-Node

Do KCL on Closed Surface Enclosing the Super-Node (the nodes connect by the voltages source and everything else connected between these two nodes)

Don't Worry About Current Into/Out of Source

This Gets Handled Automatically!

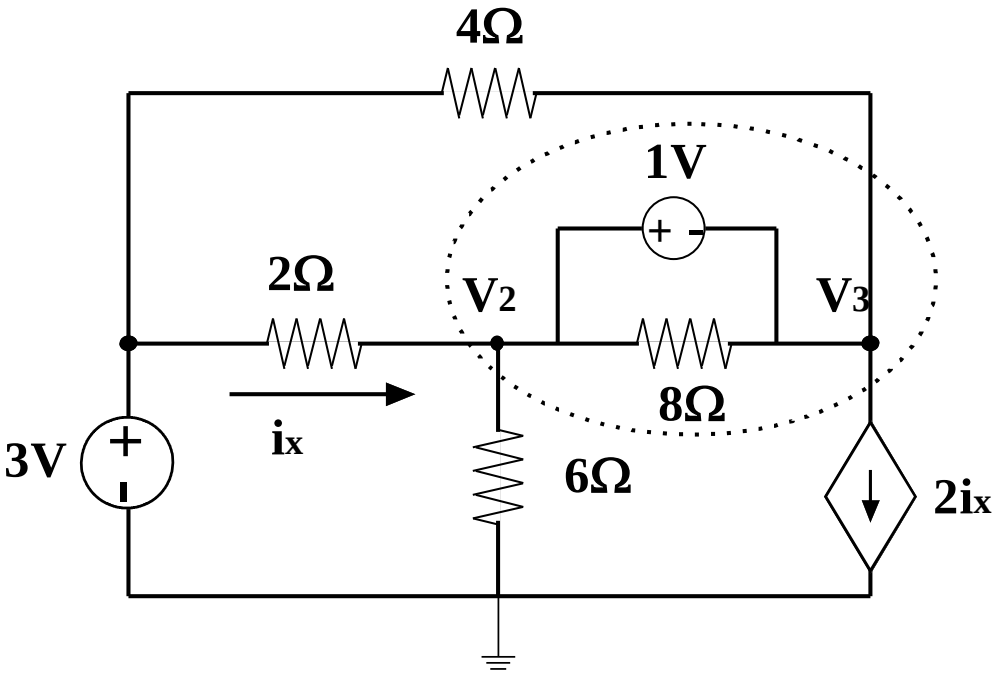

KCL at Super-Node

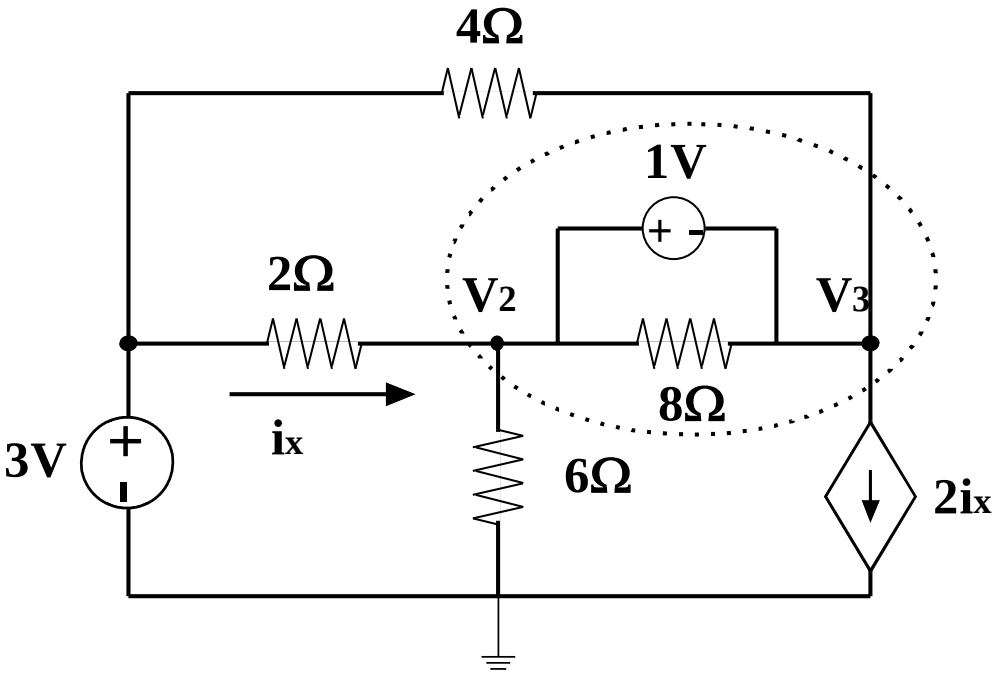

KCL at Super-Node

Do KCL on Closed Surface Enclosing the Super-Node

Don't Worry About Current Into/Out of Source

This Gets Handled Automatically!

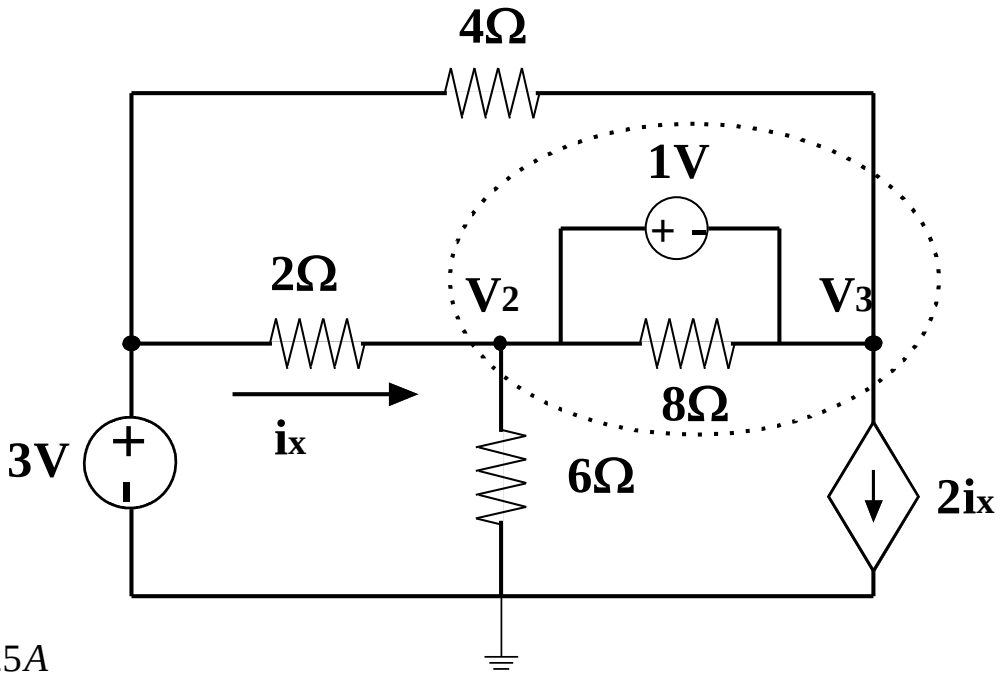

$$V_2\left[\frac{1}{2\Omega}+\frac{1}{6\Omega}\right]+V_3\left[\frac{1}{4\Omega}\right]+2i_x=\left[\frac{3V}{2\Omega}+\frac{3V}{4\Omega}\right]=2.25A$$

$$V_2\left[\frac{1}{2\Omega}+\frac{1}{6\Omega}\right]+\left(V_2-1V\right)\left[\frac{1}{4\Omega}\right]+2\left[\frac{3V-V_2}{2\Omega}\right]=2.25A$$

$$V_2\left[\frac{-1}{12\Omega}\right]=-0.5A$$

$$V_2=+6V$$

Currents & Power

Element	Power Watts
3V Source	6
2 ohm	4.5
4 ohm	1
6 ohm	6
8 ohm	0.125
1V source	-2.625
$2i_x$ source	-15
sum	0

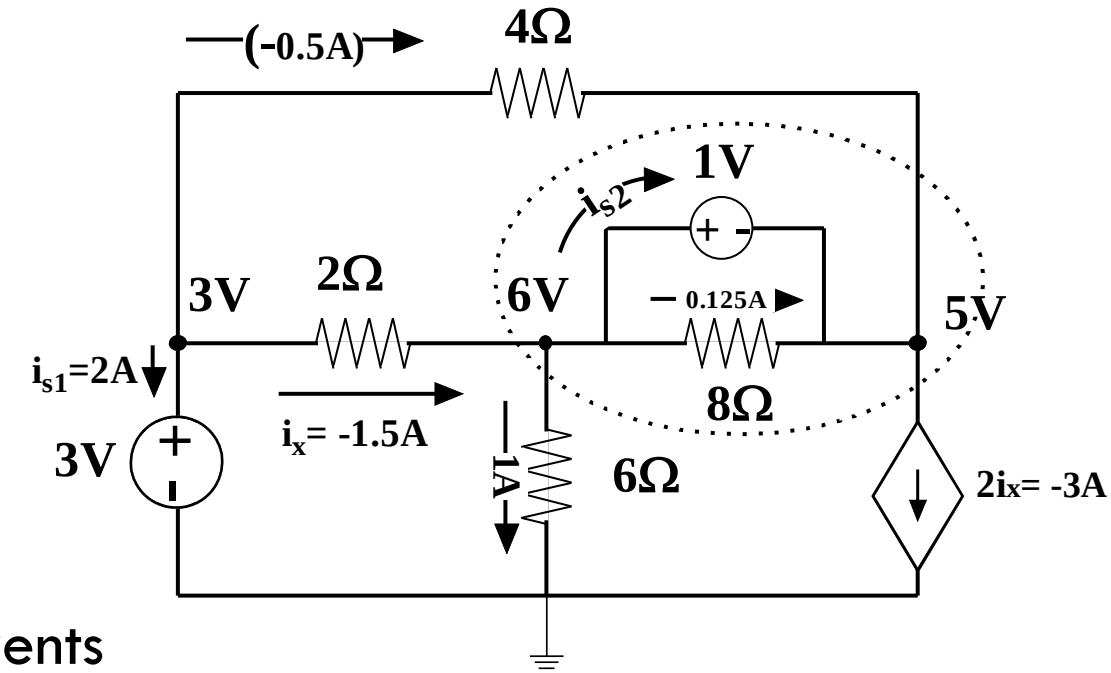

- Calculate resistor currents
- Get V-Source currents from KCL
- Note that the 3V Source DISSIPATES Power

$$i_{s1} = +2A$$

$$i_{s2} = -2.625A$$

Summary: What is a Super-node?

- **A super-node is formed when an ideal voltage source connected between two non-ground nodes of circuit**
  - Applies for both Independent and Dependent **VOLTAGE** sources
  - Reduces the Number of KCL Equations needed to find the node voltages
    - Reduces the number of mathematically independent node voltages
    - ***Currents internal to the S.N. do not have to be computed to find the node voltages***
  - Not a useful idea for current sources

Previous Example

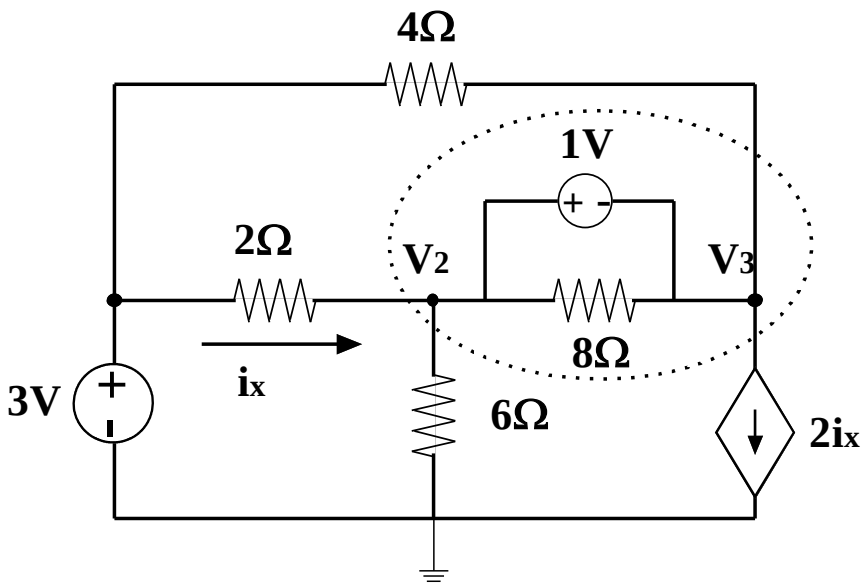

Nodes 2&3 Get treated as one Super-node for KCL since we know that V_2-V_3=1V

Altered Example

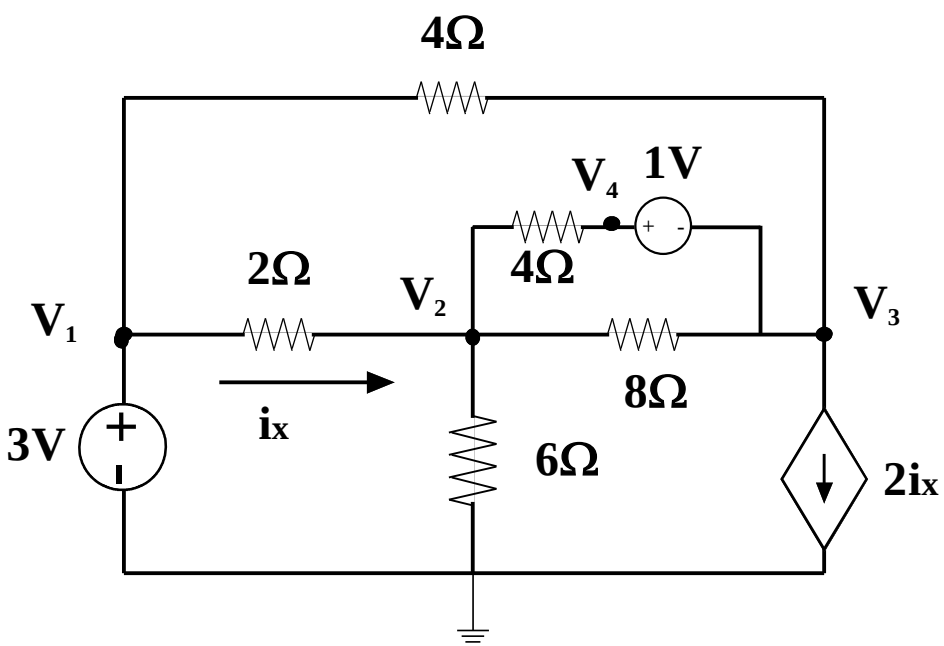

- Now Nodes 2&3 DO NOT FORM a Super-node
  - We do not know V_2 vs. V_3
- <u>Nodes 3&4 Do form a Super-node</u>
  - V_4-V_3=1V

Altered Example

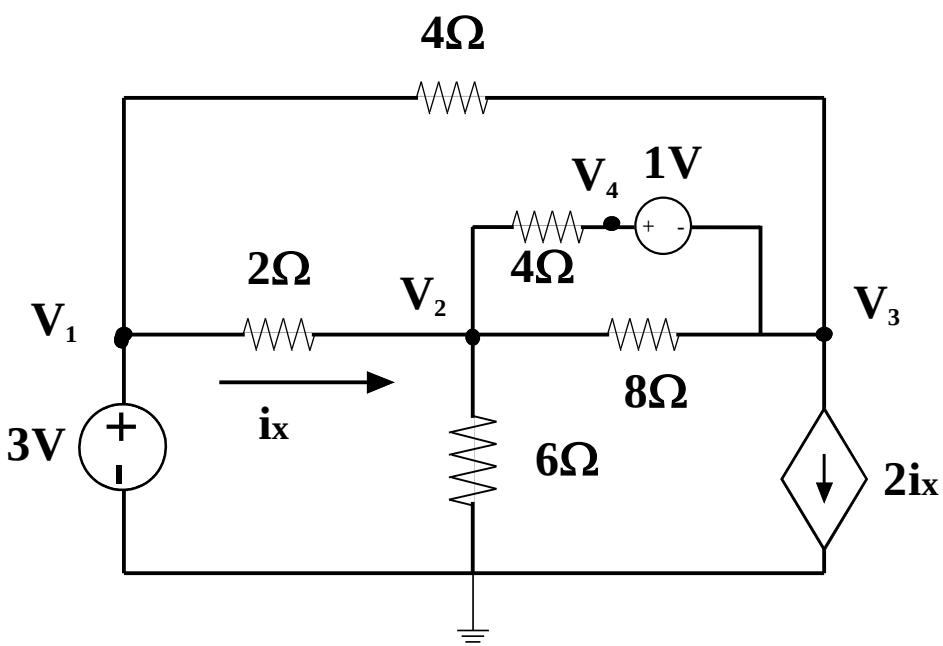

Circuit Redrawn & Supernode Indicated

V_4-V_3=1V

2 KCL equations to write:

Node 2 Normal KCL

3-4 Super-node KCL

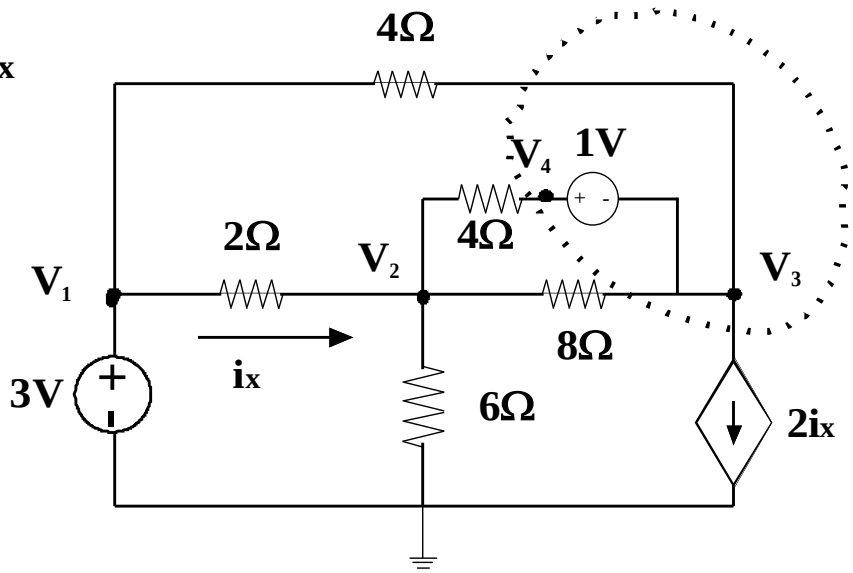

KCL Equations

Element Constraints

$$V_1 = 3V$$

$$i_x = \frac{V_1 - V_2}{2\Omega} = 1.5A - \frac{V_2}{2\Omega}$$

$$V_4 - V_3 = 1V$$

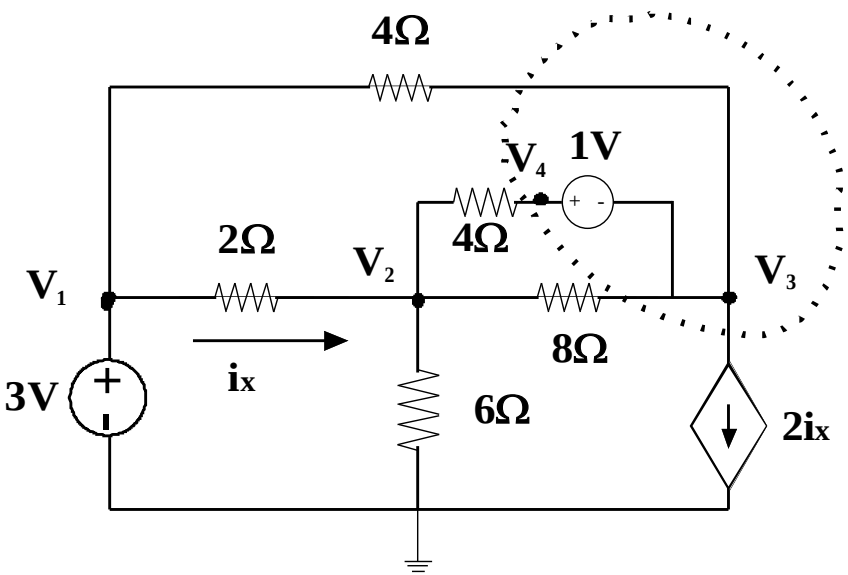

Node 2 KCL (currents out of node):

$$\frac{V_2 - V_1}{2\Omega} + \frac{V_2}{6\Omega} + \frac{V_2 - V_4}{4\Omega} + \frac{V_2 - V_3}{8\Omega} = 0$$

$3-4$ Super-node KCL (currents out of SN):

$$\frac{V_3 - V_1}{4\Omega} + \frac{V_4 - V_2}{4\Omega} + \frac{V_3 - V_2}{8\Omega} + 2i_x = 0$$

Choose either V_3 or V_4 as independent variable and simplify. I will choose V_3.

KCL Equations

Node 2 KCL (incl. element constr.):

$$V_2\left[\frac{25}{24\Omega}\right]+V_3\left[-\frac{3}{8\Omega}\right]=1.75A$$

$3-4$ Super-node KCL (incl. element constr.):

$$V_2\left[-\frac{11}{8\Omega}\right]+V_3\left[\frac{5}{8\Omega}\right]=-2.5A$$

Solving yields:

$$V_2=+\frac{15}{13}V$$
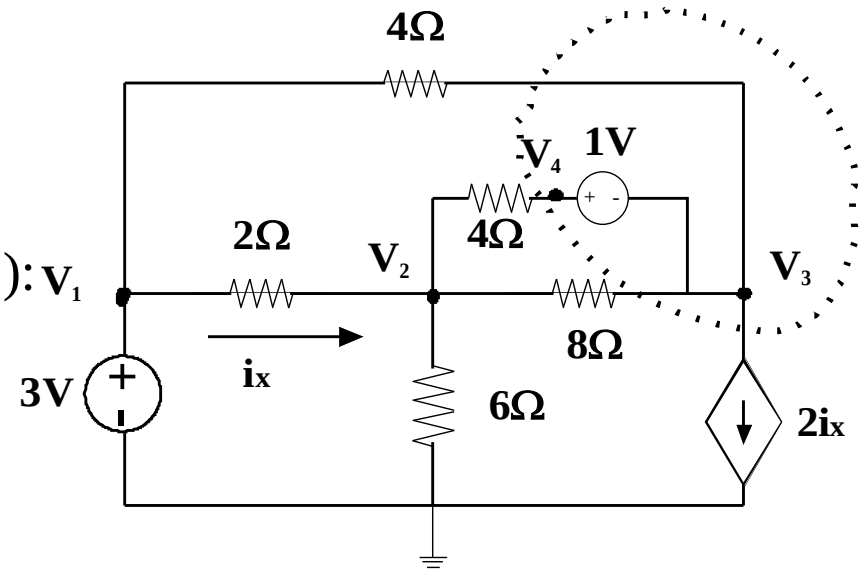
$$V_3=-\frac{19}{13}V\rightarrow V_4=-\frac{6}{13}V$$