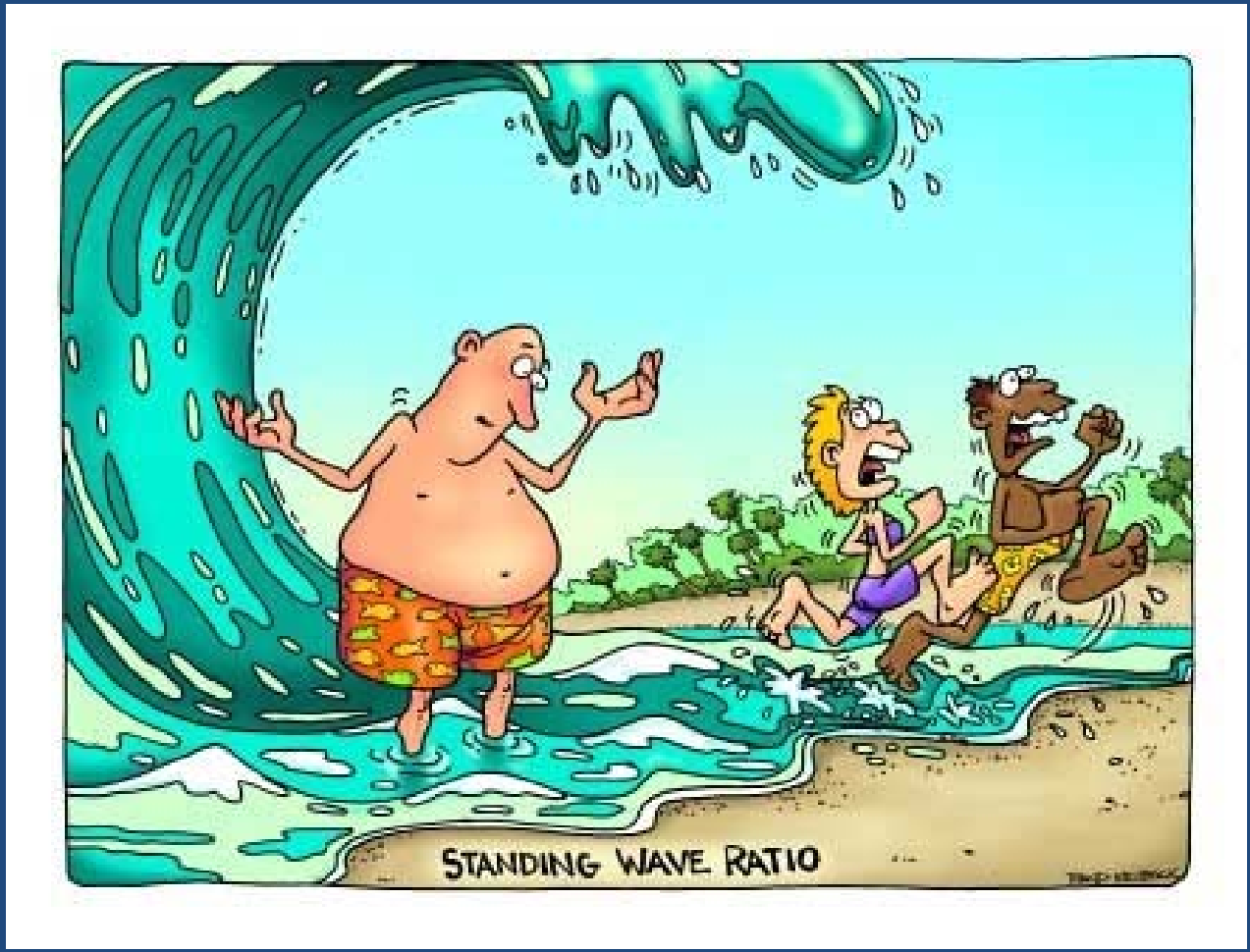

AC POWER

© Fred Terry
Fall, 2013

Understanding AC Power

- Power Delivery (Detroit Edison)
- Communications Electronics
- Dynamic Power Dissipation in Logic Circuits
- Everything in This Area Rests on the Fact that *Instantaneous Power* Is Given by:

$$p(t) = v(t)i(t)$$

- p(t) is NOT A LINEAR FUNCTION
  - Superposition does not apply

$$p(t) = v(t)i(t)$$

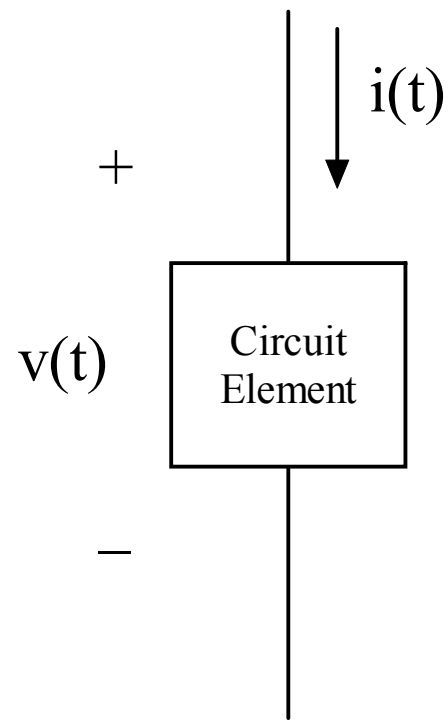

Instantaneous Power for Sinusoids

$$v(t) = V_m \cos(\omega t + \theta_v)$$

$$i(t) = I_m \cos(\omega t + \theta_i)$$

$$p(t) = v(t)i(t)$$

$$= V_m I_m \cos(\omega t + \theta_v)\cos(\omega t + \theta_i)$$

$$\cos(A)\cos(B) = \frac{1}{2}\left[\cos(A-B) + \cos(A+B)\right]$$

$$p(t) = \frac{1}{2}V_m I_m \left[\underbrace{\cos(\theta_v - \theta_i)}_{\text{Constant in time}} + \underbrace{\cos(2\omega t + \theta_v + \theta_i)}_{\text{AC with } 2\omega \text{ oscillation}}\right]$$

Example $\theta_v=0$, $\theta_i=\pi/4$

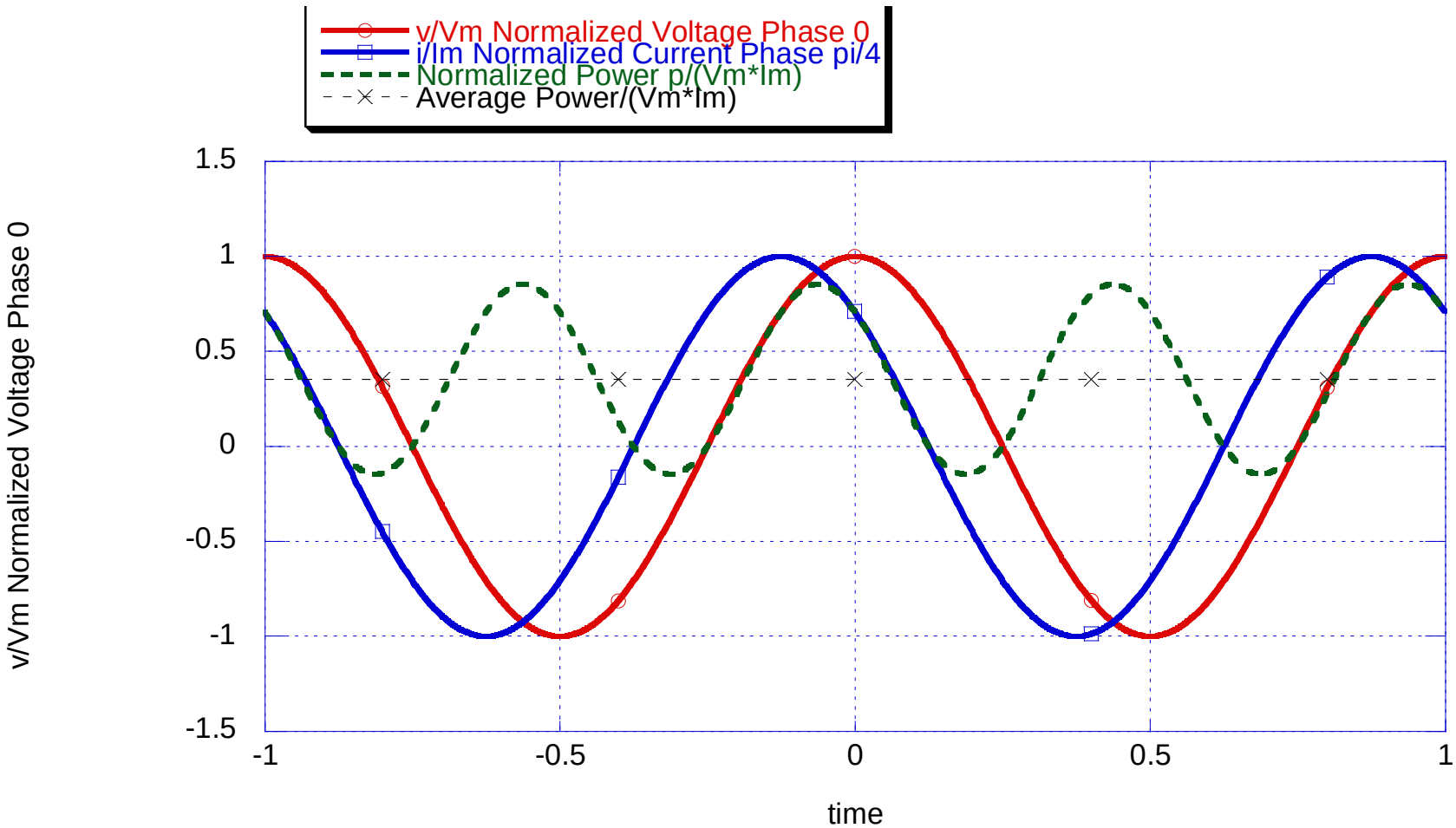

Average Power

$$p(t) = \frac{1}{2} V_m I_m \left[\underbrace{\cos(\theta_v - \theta_i)}_{\text{Constant in time}} + \underbrace{\cos(2\omega t + \theta_v + \theta_i)}_{\text{AC with } 2\omega \text{ oscillation}} \right]$$

Average Power Given by Integration Over One Cycle (Period)

$$T = \frac{2\pi}{\omega} = \frac{1}{f}$$

$$P_{ave} = \frac{1}{T} \int_0^T p(t)dt$$

$$P_{ave} = \frac{1}{T} \frac{1}{2} V_m I_m \left[\int_0^T \underbrace{\cos(\theta_v - \theta_i)}_{\text{Constant in time}} dt + \int_0^T \underbrace{\cos(2\omega t + \theta_v + \theta_i)}_{\text{AC with } 2\omega \text{ oscillation}} dt \right]$$

$$P_{ave} = \frac{1}{2} V_m I_m \cos(\theta_v - \theta_i)$$

Phasors & Average Power

$$\widetilde{V} = \underbrace{V_m e^{j\theta_v}}_{phasor\ \mathrm{V}} e^{j\omega t}$$

$$\tilde{I} = \underbrace{I_m e^{j\theta_i}}_{phasor\ \mathrm{I}} e^{j\omega t}$$

Note that

$$\mathrm{V} \cdot \mathrm{I}^* = V_m I_m \angle\left(\theta_v - \theta_i\right) = V_m I_m \left[\cos\left(\theta_v - \theta_i\right) + j\sin\left(\theta_v - \theta_i\right)\right]$$

so

$$P_{ave} = \frac{1}{2}\mathrm{Re}\left[\mathrm{V} \cdot \mathrm{I}^*\right] = \frac{1}{2}\mathrm{Re}\left[\mathrm{V}^* \cdot \mathrm{I}\right] = \mathrm{Re}\left[\mathrm{S}\right]$$

$$\mathrm{S} \equiv \frac{1}{2}\mathrm{V} \cdot \mathrm{I}^* = \mathrm{V}_{\mathrm{rms}} \cdot \mathrm{I}_{\mathrm{rms}}{}^* \text{Complex Power}$$

$$\text{Complex Power is Conserved}$$

$$P_{ave} \neq \frac{1}{2}\mathrm{Re}\left[\mathrm{V} \cdot \mathrm{I}\right]$$

Capacitors & AC Power

$$i_c = C\frac{dV_c}{dt}$$

$$\mathrm{I_c} = \mathrm{j}\omega C\mathrm{V_c}$$

$$= \omega C\mathrm{V_c}\angle\left(\theta_{V_c} + \pi/2\right)$$

$$\mathrm{S} = \frac{1}{2}\mathrm{V_c}\cdot\mathrm{I_c}^*$$

$$= \frac{1}{2}\mathrm{V_c}\cdot(-\mathrm{j})\omega C\mathrm{V_c}^*$$

$$= \underbrace{-\frac{1}{2}j\omega C\left|\mathrm{V_c}\right|^2}_{pure\,imaginary}$$

$$P_{ave} = \mathrm{Re}[\mathrm{S}] = 0$$

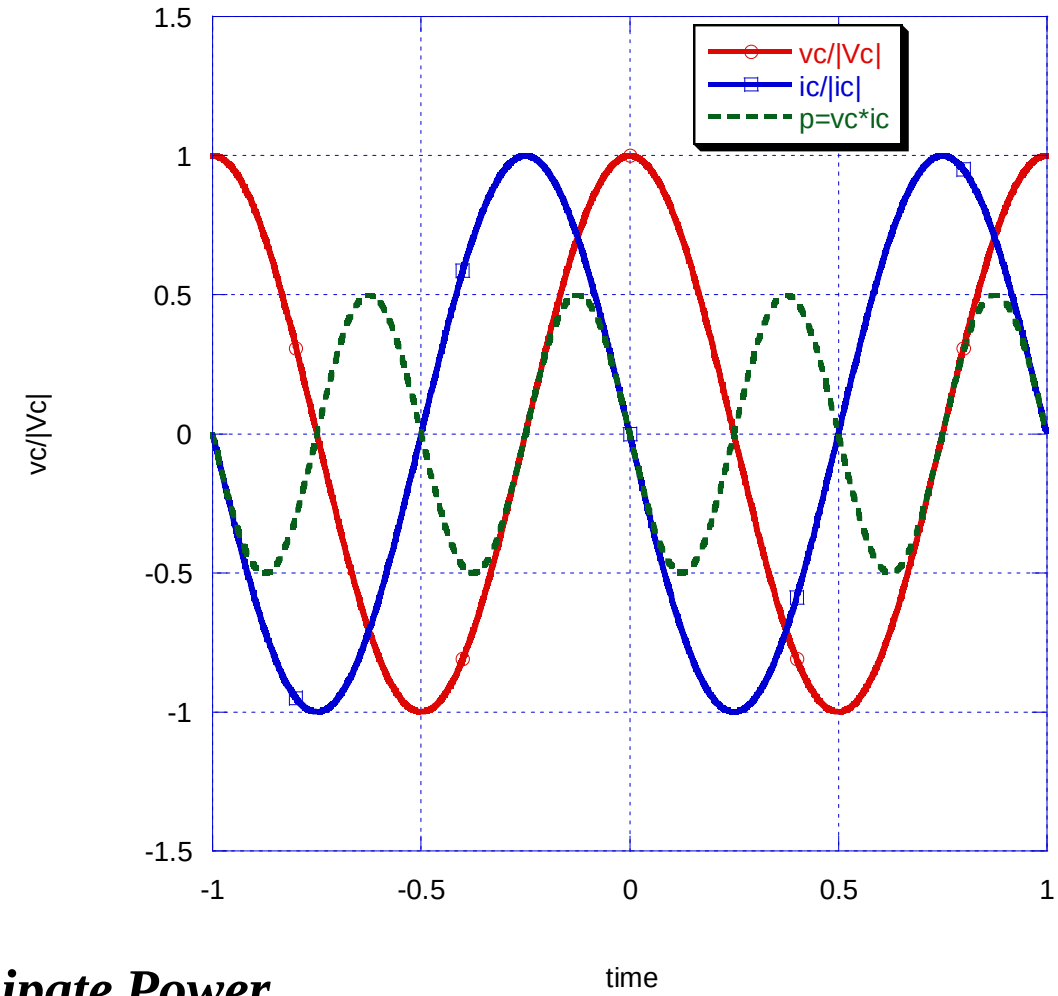

Ideal Capacitors Do Not Dissipate Power

Inductors & AC Power

$$v_L = L\frac{di_L}{dt}$$

$$\mathrm{V_L} = \mathrm{j}\omega L \mathrm{I_L}$$

$$= L\omega I_\mathrm{L} \angle\left(\theta_{I_L} + \pi/2\right)$$

$$\mathrm{S} = \frac{1}{2}\mathrm{V_L}\cdot\mathrm{I_L}^*$$

$$= \frac{1}{2} j\omega L \mathrm{I_L}\cdot\mathrm{I_L}^*$$

$$= \underbrace{+\frac{1}{2} j\omega L\left|\mathrm{I_L}\right|^2}_{pure\,imaginary} \quad (\textbf{\textit{sign error on original}})$$

$$P_{ave} = \mathrm{Re}\left[\mathrm{S}\right] = 0$$

Ideal Inductors Do Not Dissipate Power

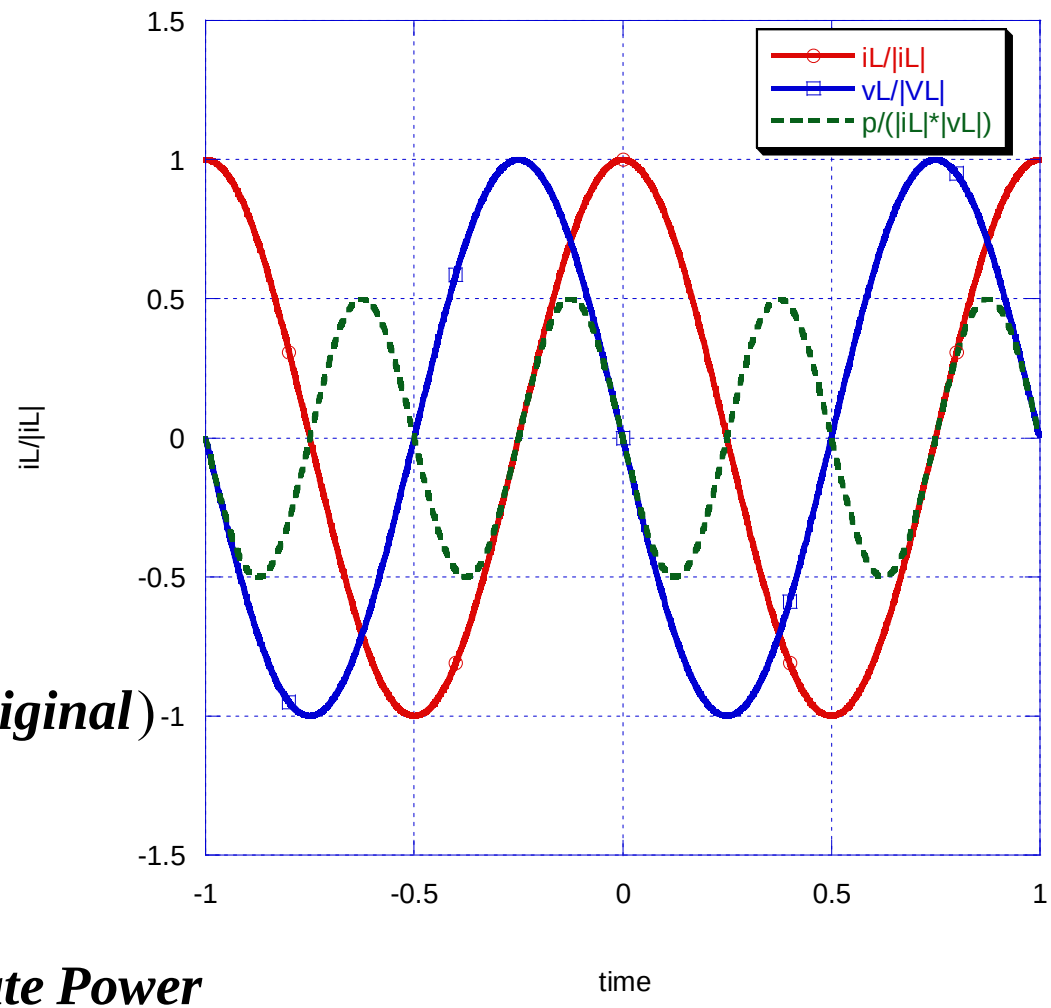

RMS Values

$$p = v(t)\,i(t)$$
$$= v^2(t)/R$$

if

$$v(t) = V_m \cos(\omega t)$$
$$i(t) = I_m \cos(\omega t)$$

then

$$P_{ave} = \frac{1}{2} V_m{}^2 / R$$
$$= \frac{1}{2} V_m \cdot I_m$$
$$= V_{rms} \cdot I_{rms}$$

here:

$$V_{rms} = \frac{1}{\sqrt{2}} V_m$$

$$I_{rms} = \frac{1}{\sqrt{2}} I_m$$

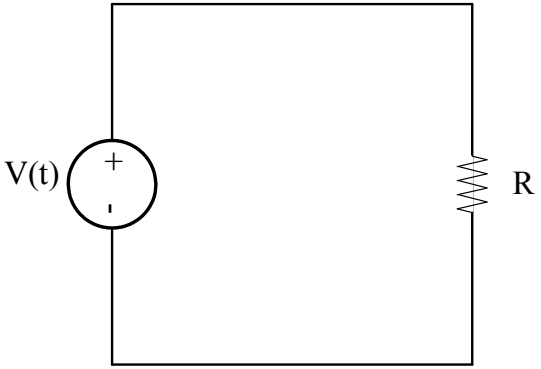

General:

$$V_{rms} = \left[\frac{1}{T} \int_0^T v^2(t)\,dt \right]^{1/2}$$

RMS values are "effective" values if the AC source is applied to a RESISTIVE load

Complex Power Conservation Example

From Earlier Work We Had
The Complex Node Voltage Results:

$v_1 = 6.1311 + 3.2209j$

$v_2 = -1.0086 - 10.8869j$

$v_3 = -0.1925 + 0.7030j$

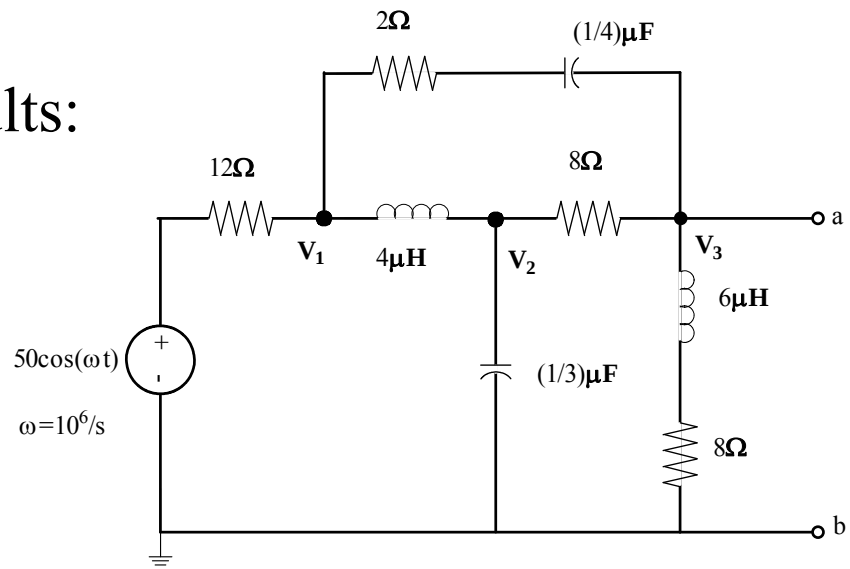

Complex Power Conservation Example

example calculation:

$$I_1 = (50 - V_1)/12\Omega = 3.6557 \ - \ 0.2684\,j$$

$$S_1 = \frac{1}{2}(50V)(-I_1^*)$$

$$S_1 = -91.3934 \ - \ 6.7103\,j \ W$$

$$S_2 = 80.6188 \ + \ 0\,j \ W$$

$$S_3 = \ 0 \ + 31.2508\,j \ W$$

$$S_4 = 2.3164 \ + \ 0\,j \ W$$

$$S_5 = 0 \ - \ 4.6329\,j \ W$$

$$S_6 = 8.4370 \ + \ 0\,j \ W$$

$$\left.\begin{aligned} S_7 &= 0 \ + \ 0.0159\,j \ W \\ S_8 &= 0 \ -19.9236\,j \ W \end{aligned}\right\} \textit{subscripts versed on original slides}$$

$$S_9 = 0.0213 \ - \ 0\,j \ W$$

$$\sum S = 0$$

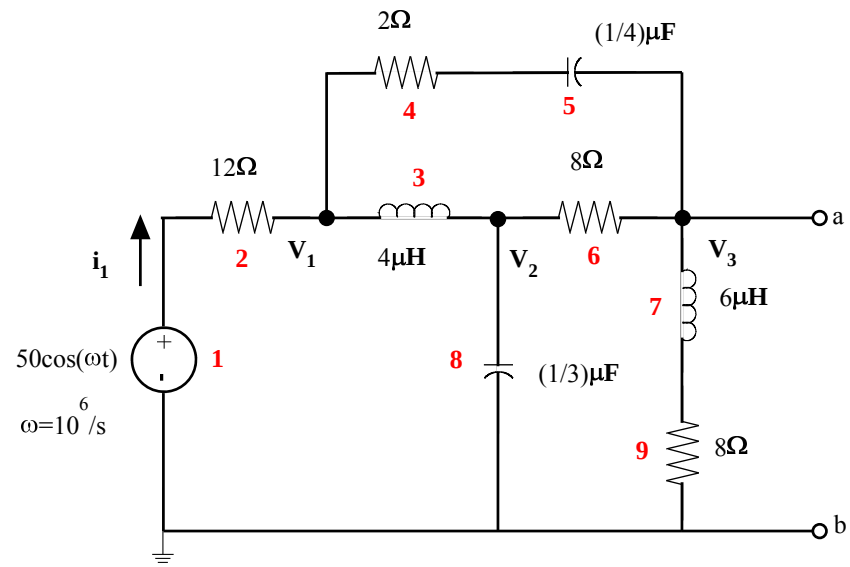

Complex Power

Phasor form defining "real" and "reactive" power

$$v(t) = V_m \cos(\omega t + \phi_v) \quad \longleftrightarrow \quad \mathbf{V} = V_m e^{j\phi_v}$$

$$i(t) = I_m \cos(\omega t + \phi_i) \quad \longleftrightarrow \quad \mathbf{I} = I_m e^{j\phi_i}$$

$$V_{rms} = V_m/\sqrt{2} \quad \longleftrightarrow \quad \mathbf{V}_{rms} = V_{rms} e^{j\phi_v}$$

$$I_{rms} = I_m/\sqrt{2} \quad \longleftrightarrow \quad \mathbf{I}_{rms} = I_{rms} e^{j\phi_i}$$

Complex Power

$$\mathbf{S} = \tfrac{1}{2}\,\mathbf{V}\mathbf{I}^* = \mathbf{V}_{rms}\mathbf{I}^*_{rms} = P_{av} + jQ$$

Real Average Power

$$\begin{aligned} P_{av} &= \Re\mathfrak{e}\ [\mathbf{S}] \\ &= V_{rms} I_{rms} \cos(\phi_v - \phi_i) \\ &= I^2_{rms} R \end{aligned}$$

Reactive Power

$$\begin{aligned} Q &= \Im\mathfrak{m}\ [\mathbf{S}] \\ &= V_{rms} I_{rms} \sin(\phi_v - \phi_i) \\ &= I^2_{rms} X \end{aligned}$$

Maximum Power Transfer

Max power delivered to load if load equal to Thevenin equivalent

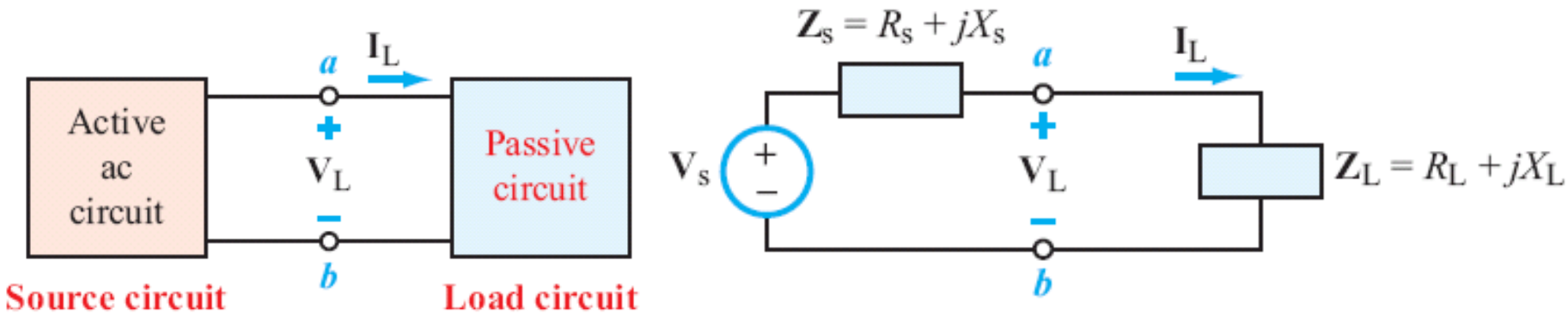

Set derivatives equal to zero $\dfrac{\partial P}{\partial X_L} = 0$ $\dfrac{\partial P}{\partial R_L} = 0$

Max power transfer when $\boxed{Z_L = R_L + jX_L = R_S - jX_S = Z_S^*}$

$$\boxed{P_{\max} = \frac{|V_{Th}|^2}{8R_S}}$$

Complex Thevenin Equivalent

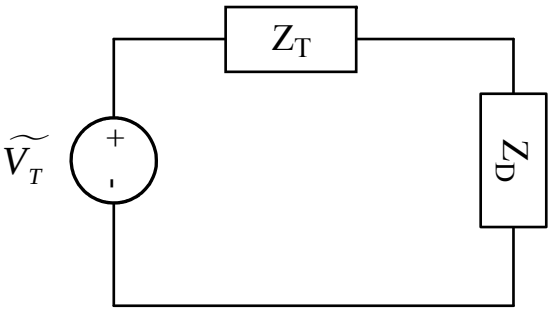

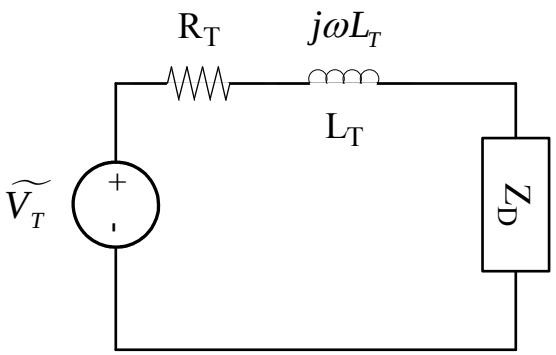

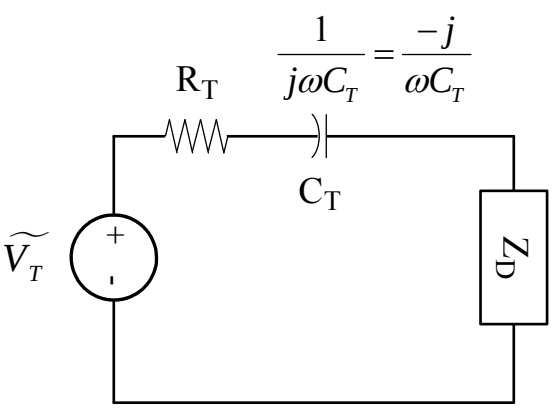

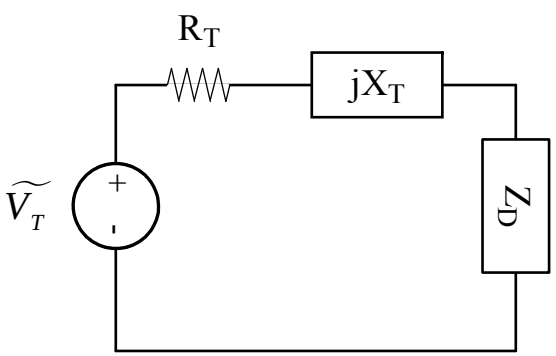

AC Maximum Power Transfer Thm

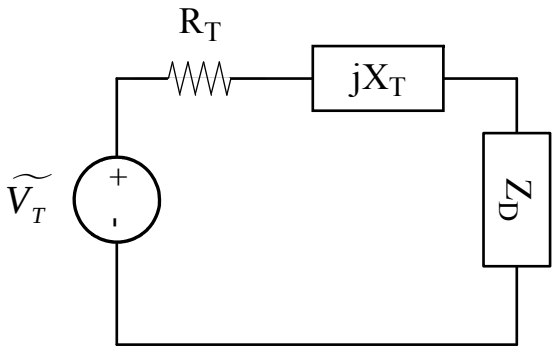

$$If:$$

$$Z_T = Z_D^*$$

$$R_T = R_D$$

$$X_T = -X_D$$

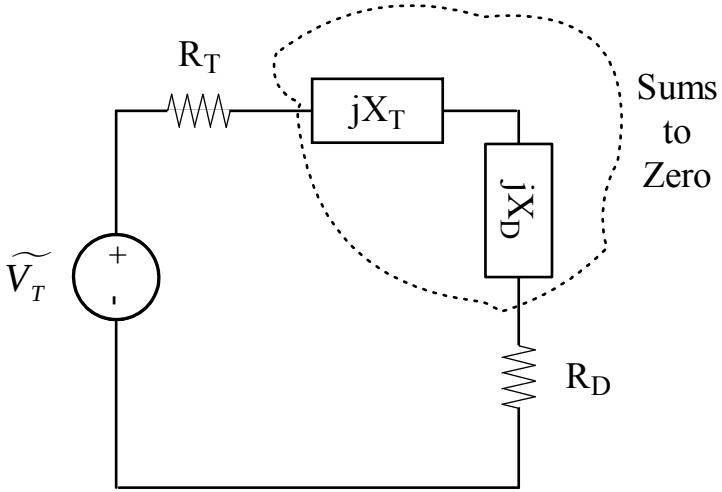

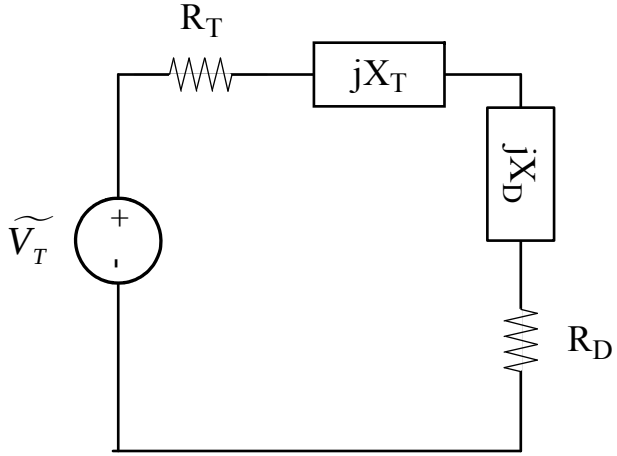

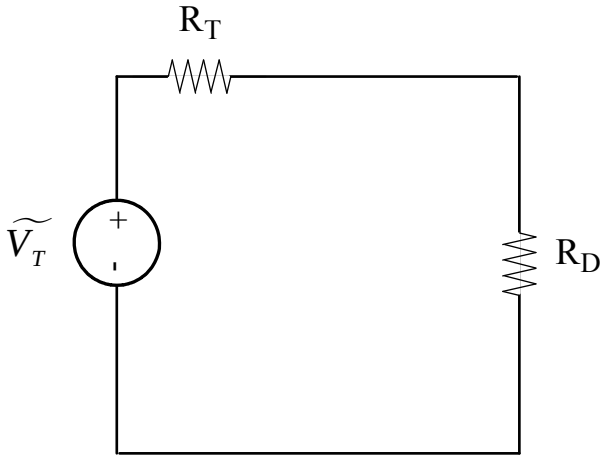

Formal Math for Maximum Power Transfer

Complex Power to load

$$S = \frac{1}{2}\widetilde{V_D} \cdot \tilde{I}^*$$

$$= \frac{1}{2}\left[\widetilde{V_T}\frac{Z_D}{Z_D + Z_T}\right]\left[\widetilde{V_T}\frac{1}{Z_D + Z_T}\right]^*$$

$$= \frac{1}{2}\left[\frac{\left|\widetilde{V_T}\right|^2}{\left|Z_D + Z_T\right|^2}\right]Z_D$$

Average Power Dissipated by Load

$$P = \mathrm{Re}[S] = \frac{1}{2}\left[\frac{\left|\widetilde{V_T}\right|^2}{\left|Z_D + Z_T\right|^2}\right]\mathrm{Re}[Z_D]$$

$$= \frac{1}{2}\left|\widetilde{V_T}\right|^2\left[\frac{R_D}{\left(R_D + R_T\right)^2 + \left(X_D + X_T\right)^2}\right]$$

Taking

$$\frac{\partial P}{\partial X_D} = 0 \;\; and \;\; \frac{\partial P}{\partial R_D} = 0$$

yields

$$R_D = R_T \;\; and \;\; X_D = X_T^* \;\; or \;\; Z_D = Z_T^*$$

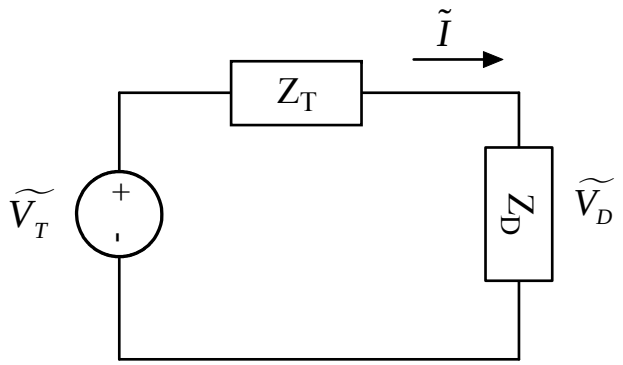

$$\frac{\partial P}{\partial X_D} = -\left|\widetilde{V_T}\right|^2\left[\frac{R_D\left(X_D + X_T\right)}{\left[\left(R_D + R_T\right)^2 + \left(X_D + X_T\right)^2\right]^2}\right]$$

$$\frac{\partial P}{\partial R_D} = \frac{1}{2}\left|\widetilde{V_T}\right|^2\left[\frac{\left(R_D + R_T\right)^2 + \left(X_D + X_T\right)^2 - 2R_D\left(R_D + R_T\right)}{\left[\left(R_D + R_T\right)^2 + \left(X_D + X_T\right)^2\right]^2}\right]$$

Power Factor

Inductive/Capacitive loads will require more from the power supply than the average power being consumed

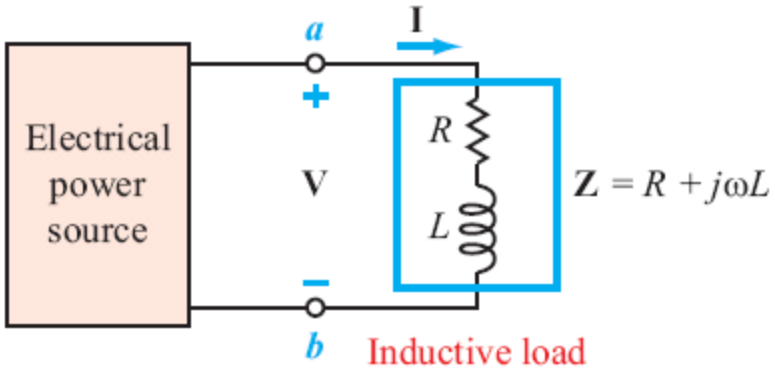

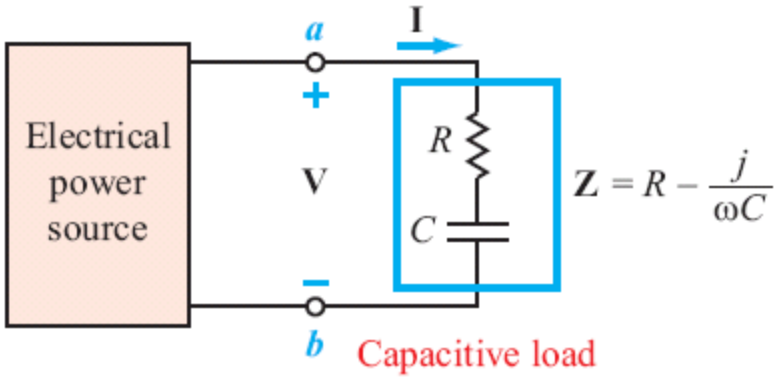

Power supply need to supply S in order to deliver P_{AV} to load

Apparent Power

$$S = |\mathbf{S}| = \sqrt{P_{av}^2 + Q^2}$$
$$= V_{rms} I_{rms}$$
$$= I_{rms}^2 |\mathbf{Z}|$$

Power factor relates S to P_{AV}

Power Factor

$$pf = \frac{P_{av}}{S}$$
$$= \cos(\phi_v - \phi_i)$$
$$= \cos \phi_z$$

Power Factor Compensation

Introduce reactive elements to max. Power Factor

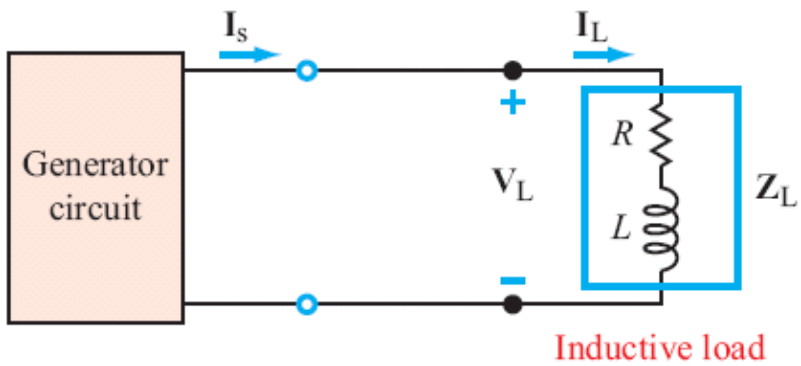

(a) Uncompensated load

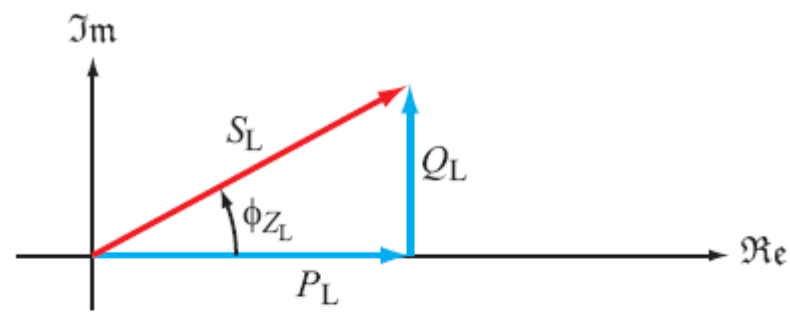

(b) Uncompensated load

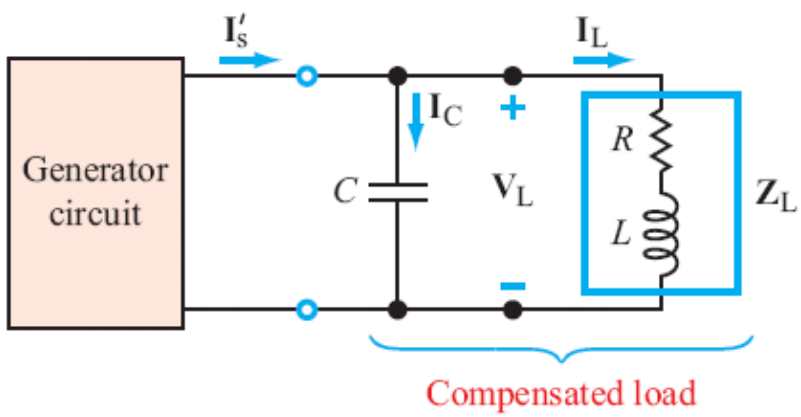

(b) Compensated load

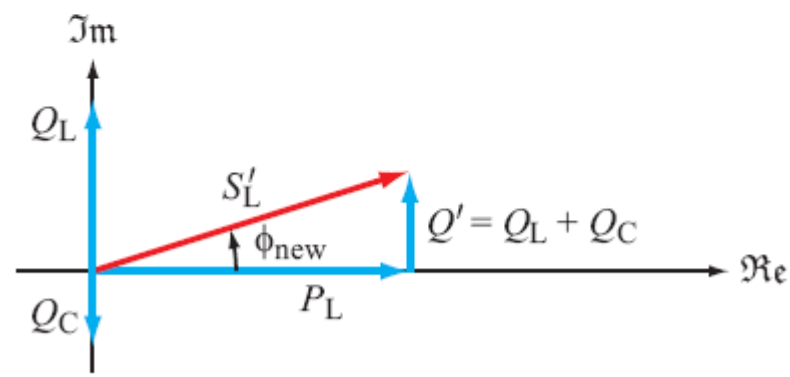

(c) Compensated load

Matching Networks

- What do we do to cancel reactive load?
- What if $R_T \neq R_D$
- Answer is use of Matching Network
- Common Applications:
  - Antenna matching in communications
  - Transmission Line Matching
  - RF Plasma Processing

Example 1: Matching to a Capacitive Load + Series Resistance

Suppose

$$R_T > R_D$$

$$C_D > 0$$

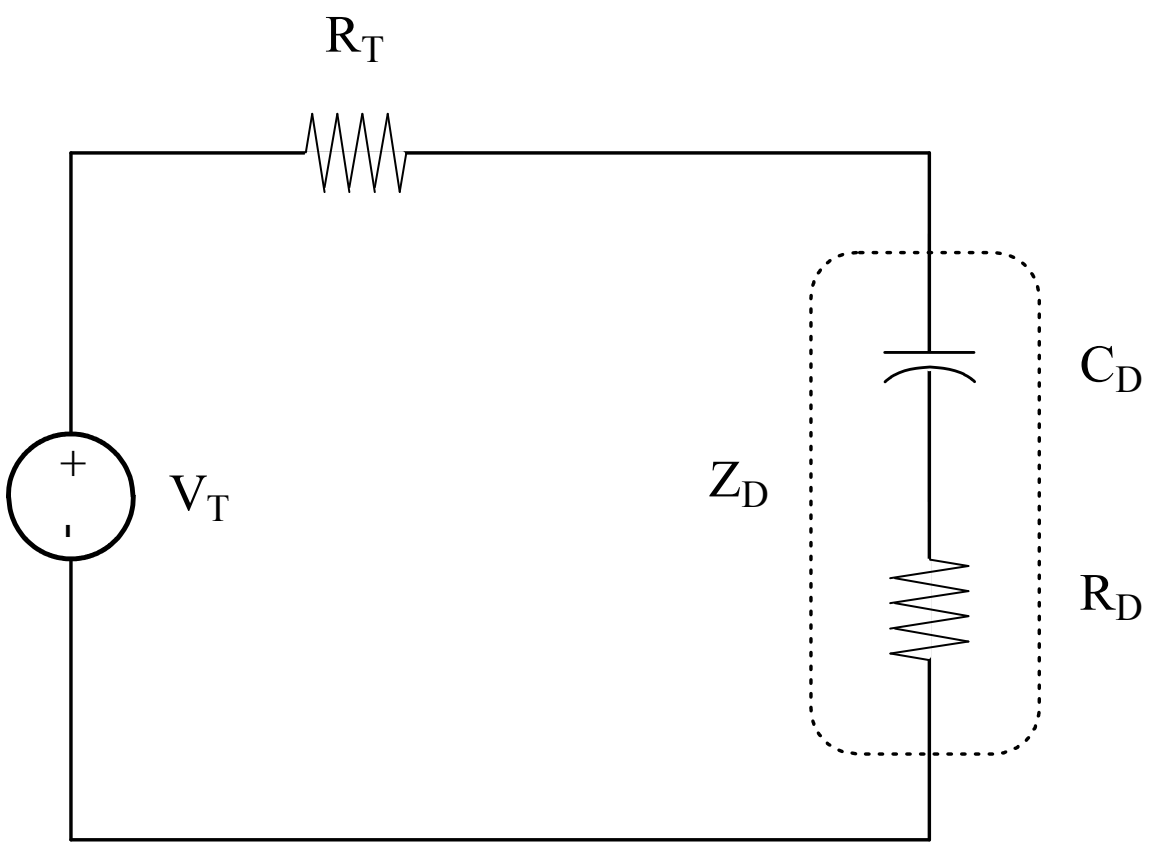

Shifting Effective R_T

Consider the effect of an added Capacitor

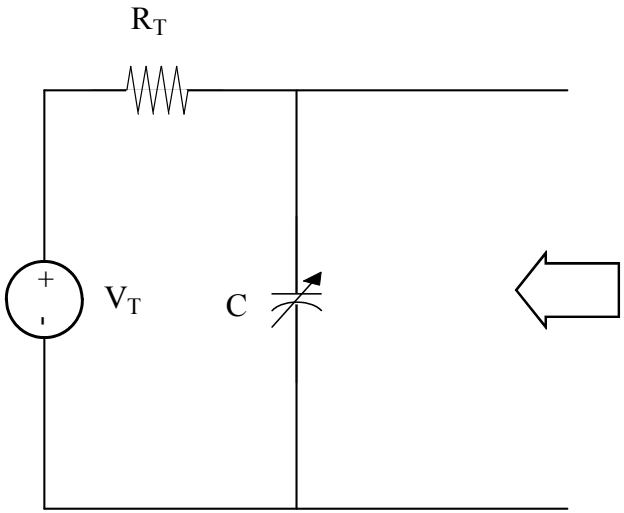

Shifting Effective R_T

$$Z = \left(\frac{1}{j\omega C}\right) \| R_T = \frac{R_T}{1 + j\omega C R_T}$$

$$= \left[\frac{R_T}{1 + (\omega C R_T)^2}\right] - j\left[\frac{\omega C R_T^2}{1 + (\omega C R_T)^2}\right]$$

$$V_{oc} = \frac{V_T}{1 + j\omega C R_T}$$

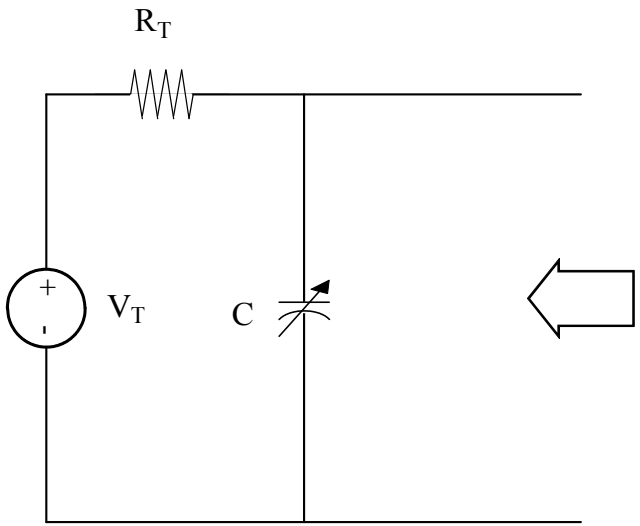

Now Cancel Reactance: L-Network

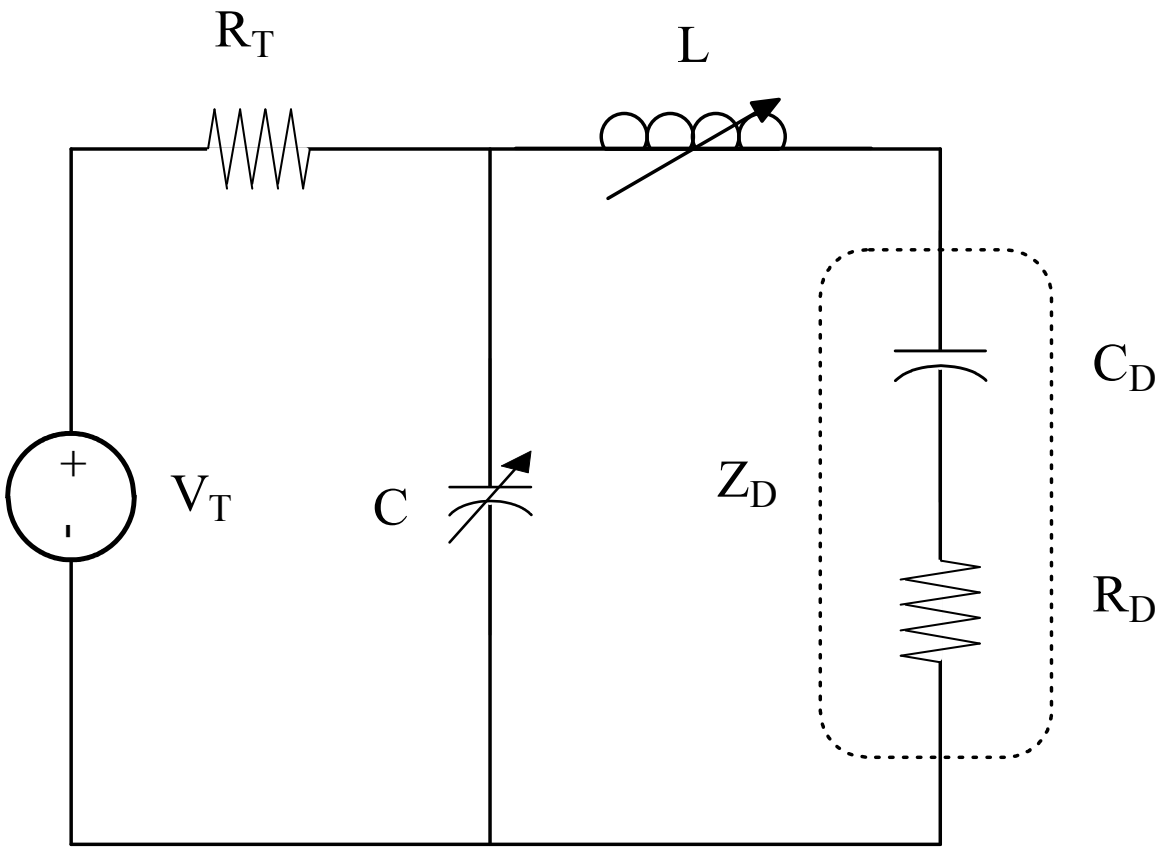

Thevenin Equivalent

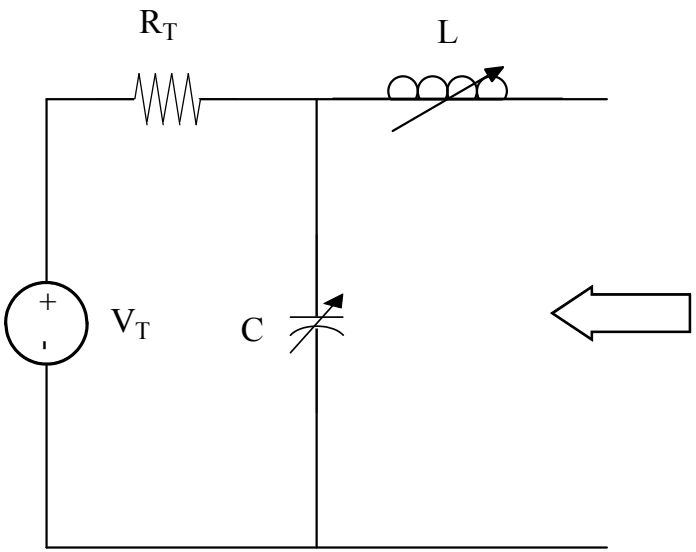

Thevenin Equivalent

$$Z = \left(\frac{1}{j\omega C}\right) \| R_T + j\omega L$$

$$Z = \left[\frac{R_T}{1+\left(\omega C R_T\right)^2}\right] + j\left[\frac{-\omega C R_T}{1+\left(\omega C R_T\right)^2} + \omega L\right]$$

$$V_{oc} = \frac{V_T}{1 + j\omega C R_T}$$

Set

$$\mathrm{Re}[Z] = R_D \rightarrow C = \frac{1}{\omega R_T}\left(\frac{R_T - R_D}{R_D}\right)^{1/2}$$

$$j\left[\frac{-\omega C R_T^2}{1+\left(\omega C R_T\right)^2} + \omega L\right] = \left(\frac{1}{j\omega C_D}\right)^* = -\frac{1}{j\omega C_D} = +j\frac{1}{\omega C_D}$$

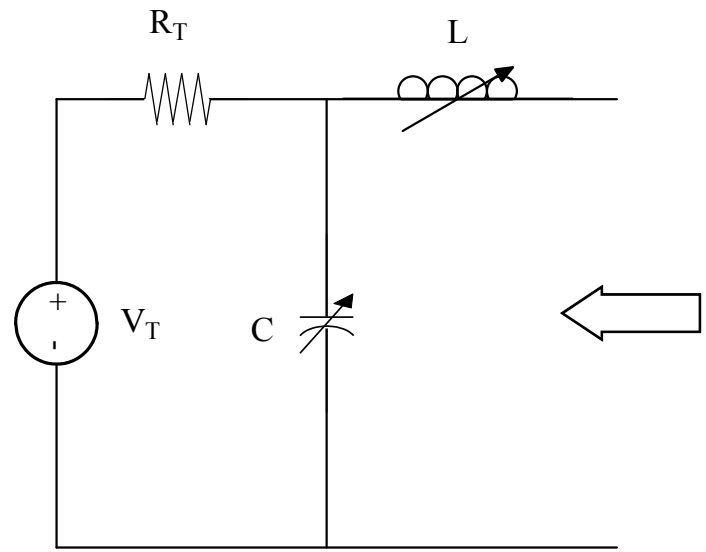

Thevenin Equivalent

$$\mathrm{Re}[Z] = R_D \rightarrow C = \frac{1}{\omega R_T}\left(\frac{R_T - R_D}{R_D}\right)^{1/2}$$

$$j\left[\frac{-\omega C R_T^2}{1+\left(\omega C R_T\right)^2} + \omega L\right] = j\frac{1}{\omega C_D}$$

$$\frac{-\omega C R_T^2}{1+\left(\omega C R_T\right)^2} + \omega L = \frac{1}{\omega C_D}$$

$$-\left(\frac{R_T^2}{2R_T - R_D}\right)\left[\frac{\left(R_T - R_D\right)}{R_D}\right]^{1/2} + \omega L = \frac{1}{\omega C_D}$$

$$L = \frac{1}{\omega^2 C_D} + \frac{1}{\omega}\left(\frac{R_T^2}{2R_T - R_D}\right)\left[\frac{\left(R_T - R_D\right)}{R_D}\right]^{1/2}$$

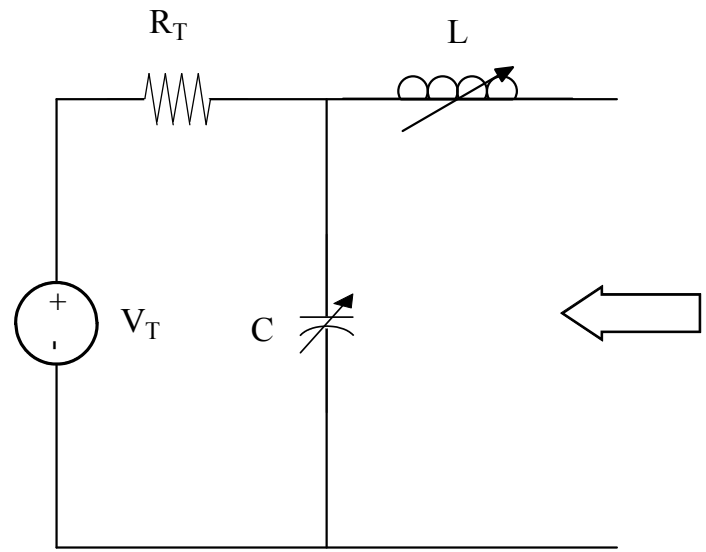

$$V_{oc} = \frac{V_T}{1 + j\omega C R_T}$$

$$= \frac{V_T}{1 + j\left(\frac{R_T - R_D}{R_D}\right)^{1/2}}$$

At Match Conditions

$$V_{oc} = \frac{V_T}{1 + j\left(\frac{R_T - R_D}{R_D}\right)^{1/2}}$$

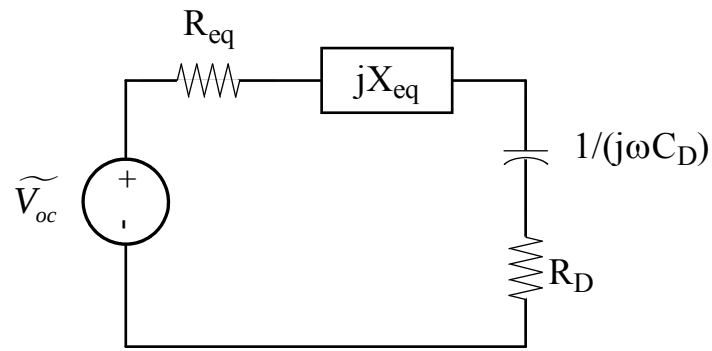

$$\mathrm{R}_{eq} = R_D$$

$$jX_{eq} = -\left(\frac{1}{j\omega C_D}\right)$$

$$I = \frac{V_{oc}}{2R_D}$$

$$V = \frac{V_{oc}}{2}$$

$$S_{R_D} = \frac{1}{2}\frac{V_{oc}}{2}\left(\frac{V_{oc}}{2R_D}\right)^* = \frac{|V_{oc}|^2}{8R_D} = \left(\frac{1}{8R_D}\right)\frac{|V_T|^2}{1 + \left(\frac{R_T - R_D}{R_D}\right)} = \left(\frac{1}{8}\right)\frac{|V_T|^2}{R_D + R_T - R_D} = \frac{|V_T|^2}{8R_T}$$

View from Source At Match Conditions

$$Z = \left(\frac{1}{j\omega C}\right) \| \left(j\omega L + \frac{1}{j\omega C_D} + R_D\right)$$

$$At\ Match\ Condition$$
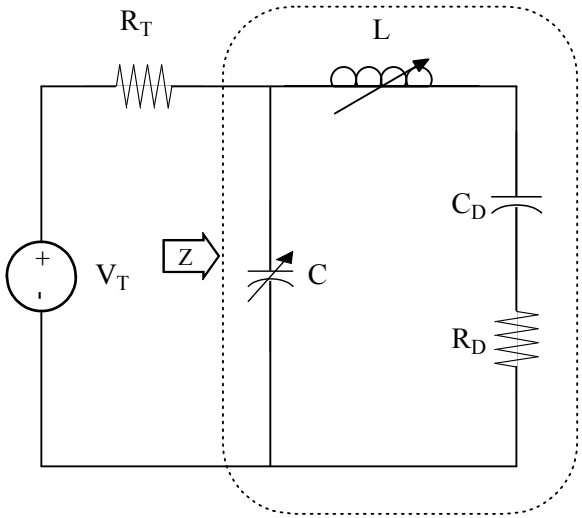
$$Z = R_T$$