Samsung GPS Receiver [2010]

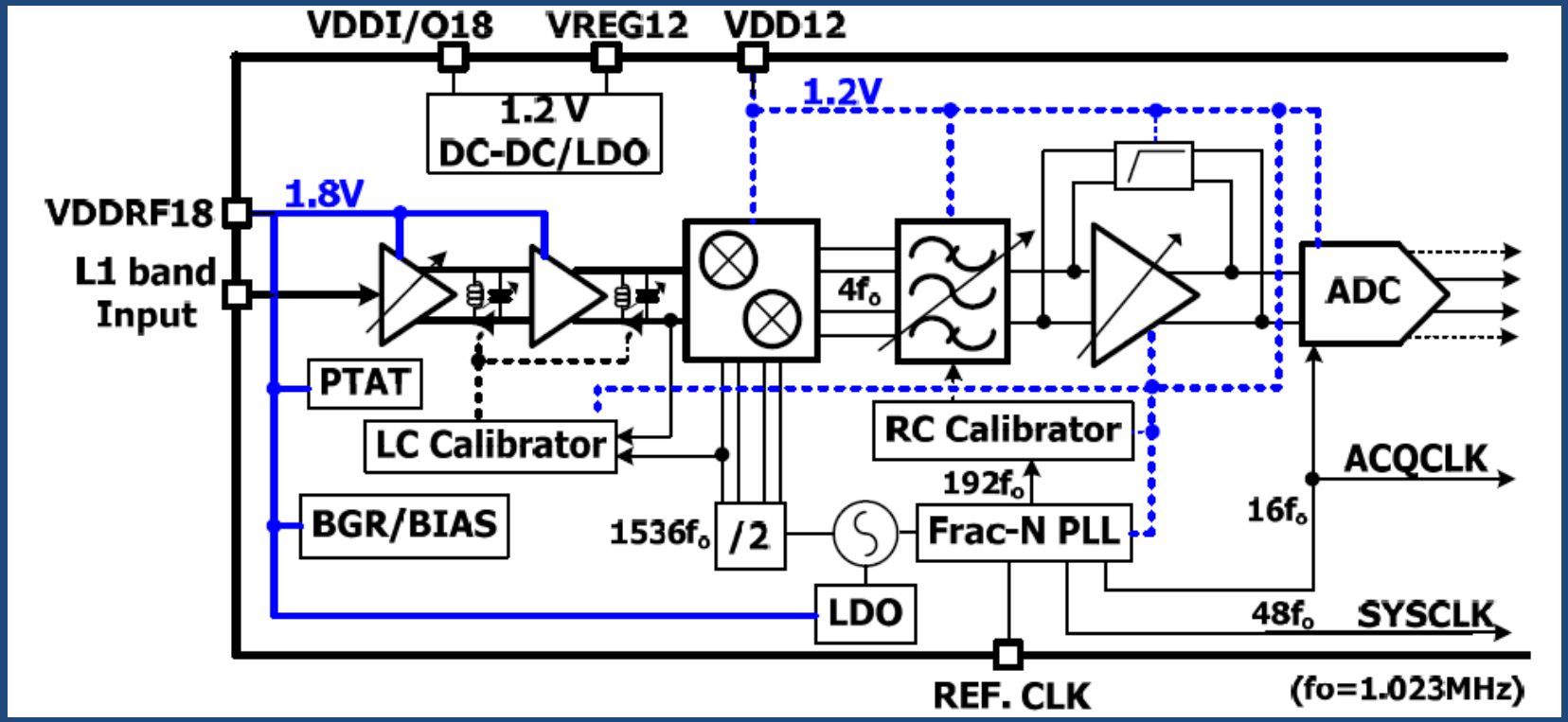

ACTIVE FILTERS

Acknowledgements
David Wentzloff

Active Filters

Active filters – incorporate op amps, transistors, etc

- Provide gain
- No inductors needed (inductors are large and hard to build at low frequencies, poor Q's due to Rs for inductors)
  - (e.g. Sallen-Key filter, Gm-C filters)
- Good at low frequency
- Multiple buffered stages

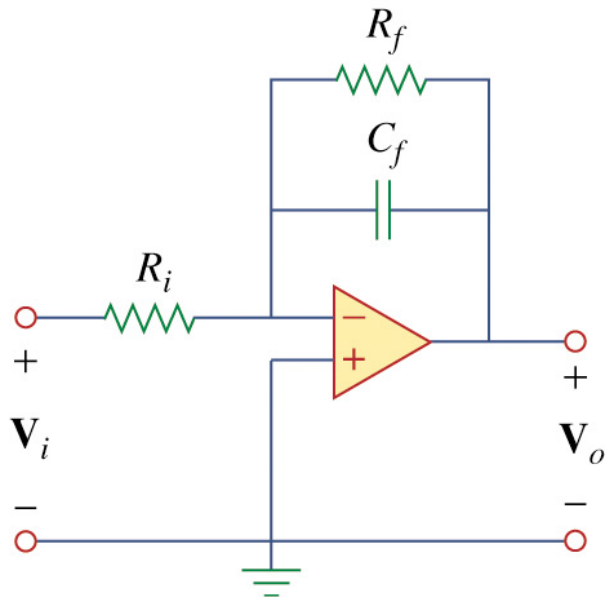

Multiple Buffered Stages

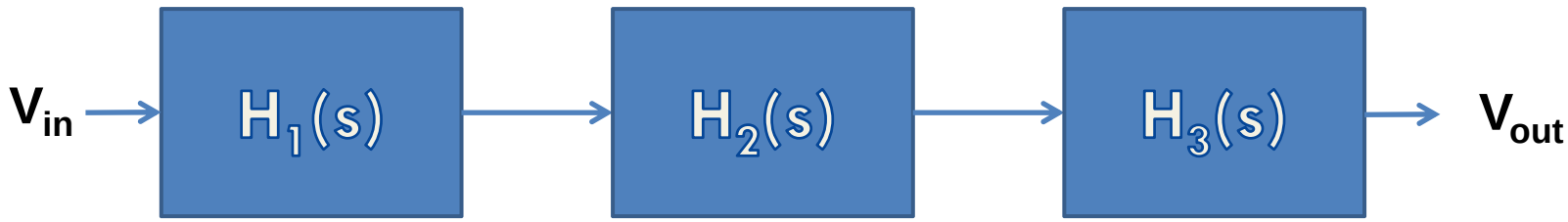

We want

$$H(s) = \frac{V_{out}(s)}{V_{in}(s)} = H_1(s)H_2(s)H_3(s)$$

Example

$$H(s) = \left[\frac{2\alpha_1 s}{s^2 + 2\alpha_1 s + \omega_{n1}^2}\right]\left[\frac{2\alpha_2 s}{s^2 + 2\alpha_2 s + \omega_{n2}^2}\right]\left[\frac{2\alpha_3 s}{s^2 + 2\alpha_3 s + \omega_{n3}^2}\right]$$

KEY IS THAT FILTER 2 DOESN'T LOAD/CHANGE FILTER 1, ETC

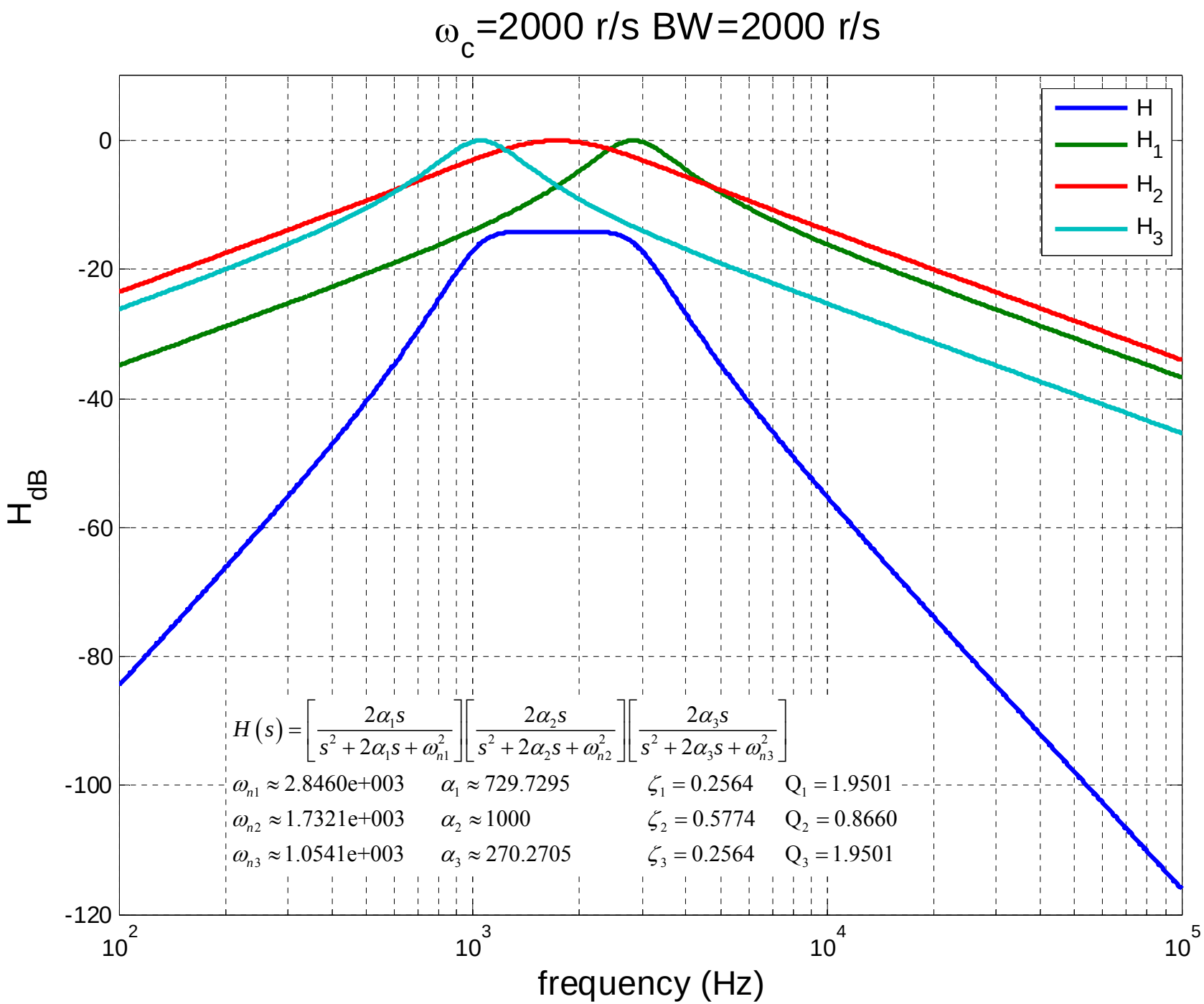
ωc=2000 r/s BW=2000 r/s
H
H1
H2
H3
0
-20
-40
-60
-80
-100
-120
HdB
10^2
10^3
10^4
10^5
frequency (Hz)
$H(s)=\left[\frac{2\alpha_1 s}{s^2+2\alpha_1 s+\omega_{n1}^2}\right]\left[\frac{2\alpha_2 s}{s^2+2\alpha_2 s+\omega_{n2}^2}\right]\left[\frac{2\alpha_3 s}{s^2+2\alpha_3 s+\omega_{n3}^2}\right]$
$\omega_{n1}\approx 2.8460e+003$ $\alpha_1\approx 729.7295$ $\zeta_1=0.2564$ $Q_1=1.9501$
$\omega_{n2}\approx 1.7321e+003$ $\alpha_2\approx 1000$ $\zeta_2=0.5774$ $Q_2=0.8660$
$\omega_{n3}\approx 1.0541e+003$ $\alpha_3\approx 270.2705$ $\zeta_3=0.2564$ $Q_3=1.9501$

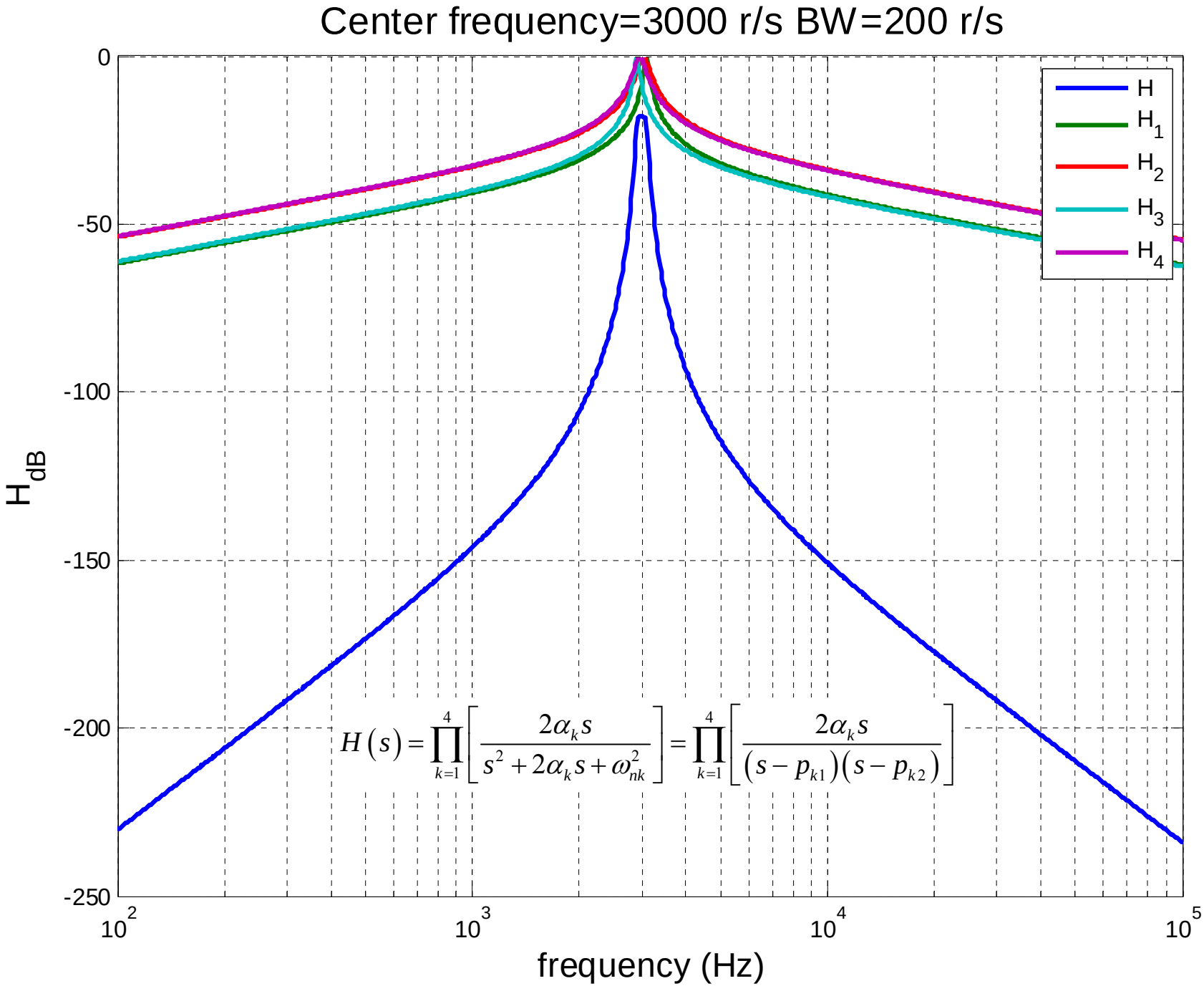
Center frequency=3000 r/s BW=200 r/s
0
-50
-100
-150
-200
-250
H_dB
10^2
10^3
10^4
10^5
frequency (Hz)
H
H_1
H_2
H_3
H_4
$H(s)=\prod_{k=1}^{4}\left[\frac{2\alpha_k s}{s^2+2\alpha_k s+\omega_{nk}^2}\right]=\prod_{k=1}^{4}\left[\frac{2\alpha_k s}{(s-p_{k1})(s-p_{k2})}\right]$

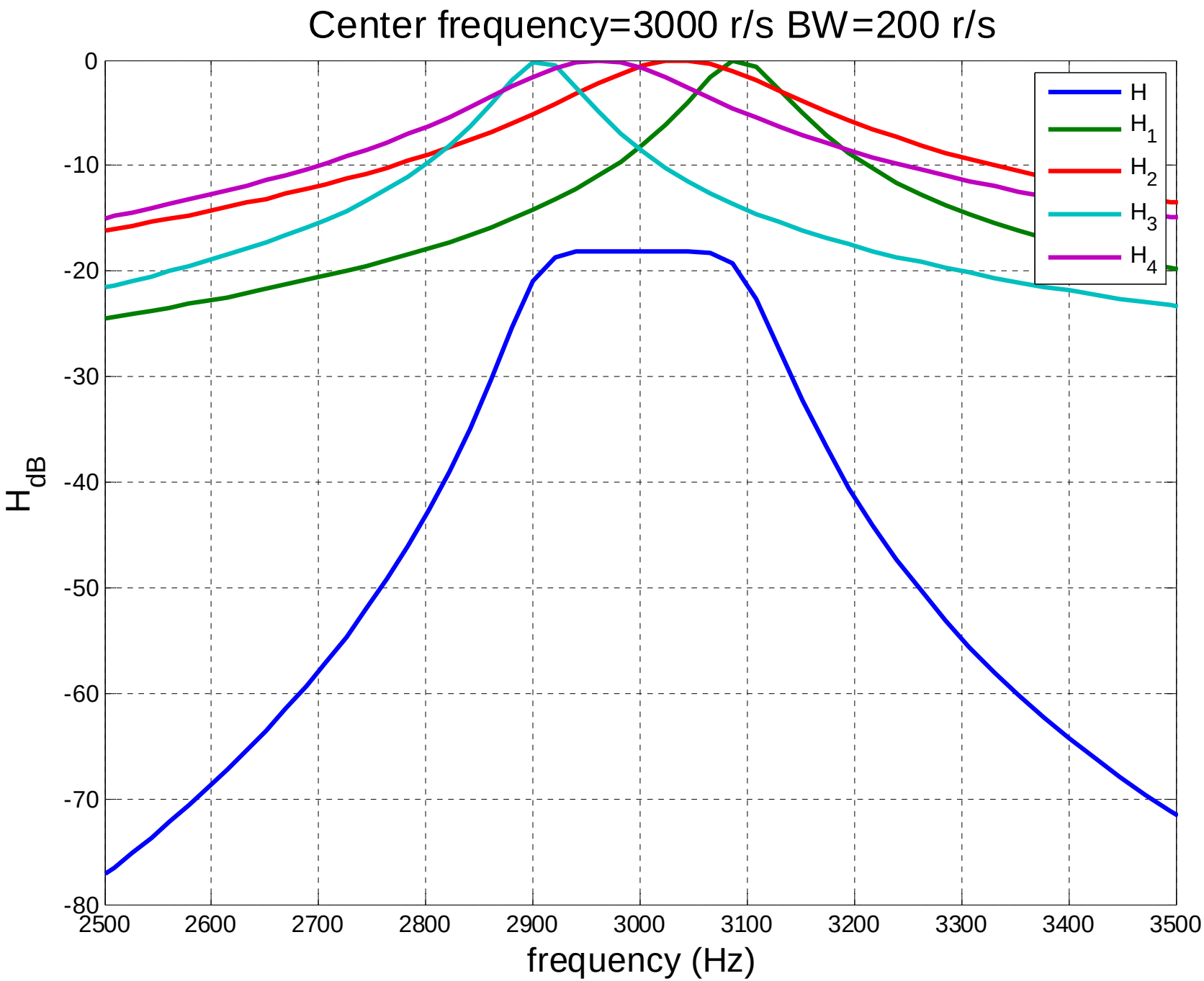
Center frequency=3000 r/s BW=200 r/s
0
-10
-20
-30
-40
-50
-60
-70
-80
H_{dB}
2500
2600
2700
2800
2900
3000
3100
3200
3300
3400
3500
frequency (Hz)
H
H_1
H_2
H_3
H_4

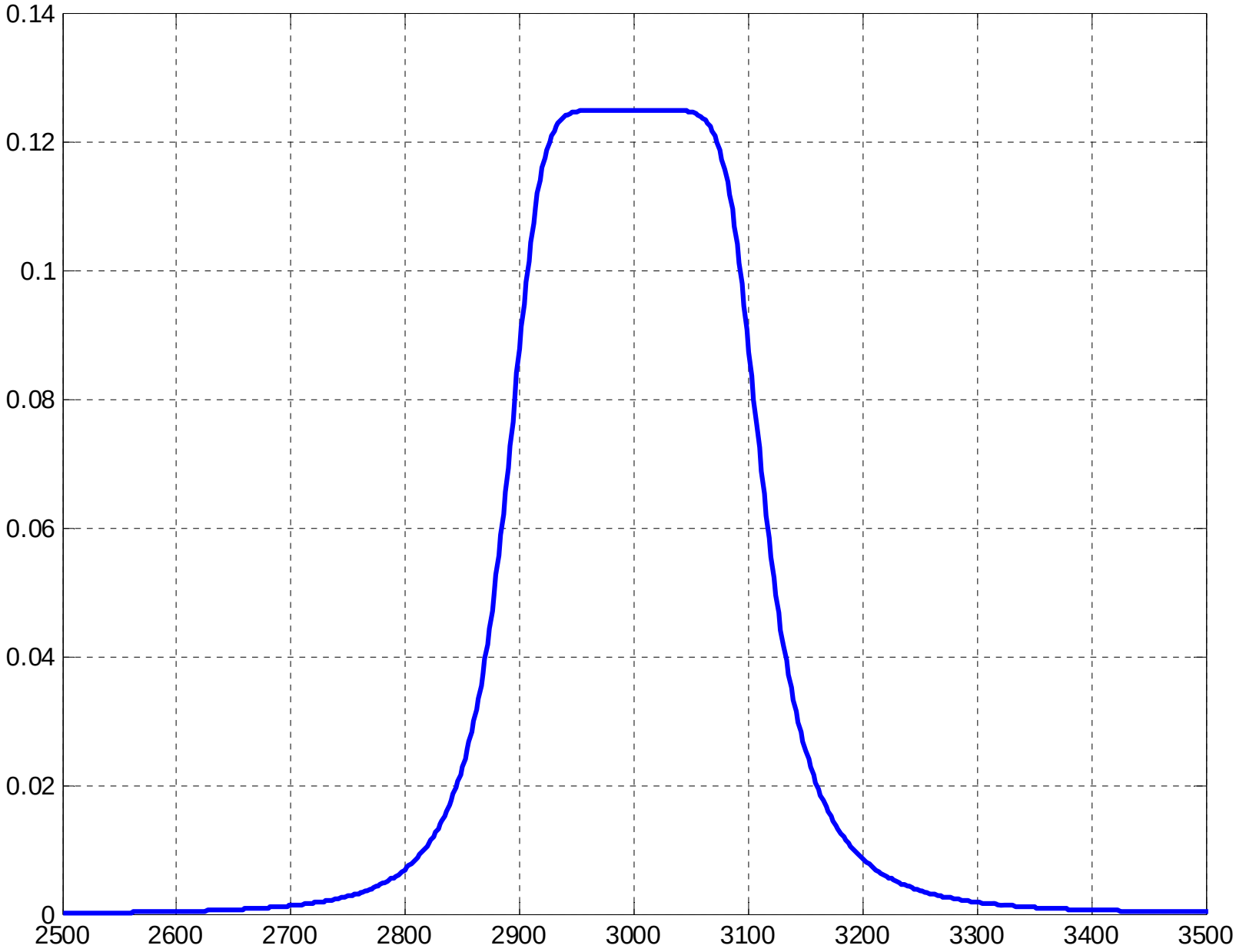
0.14
0.12
0.1
0.08
0.06
0.04
0.02
0
2500
2600
2700
2800
2900
3000
3100
3200
3300
3400
3500

Simple Active Filters – Inverting Amp Topology

$$\mathbf{V}_{out} = -\frac{\mathbf{Z}_f}{\mathbf{Z}_s}\mathbf{V}_s$$

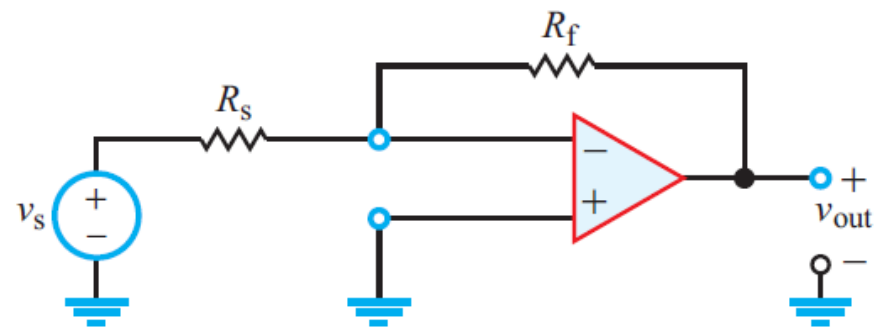

(a) Inverting amplifier

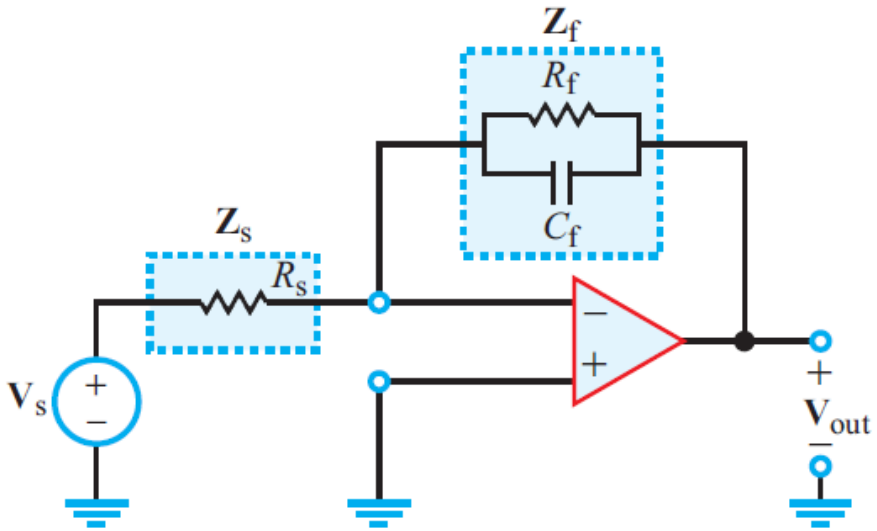

(b) Phasor domain with impedances

Figure 9-23: Inverting amplifier functioning like a lowpass filter.

Lowpass filter with DC gain of $-R_f/R_i$

$$\omega_c = \frac{1}{R_f C_f}$$

Active Highpass Filter

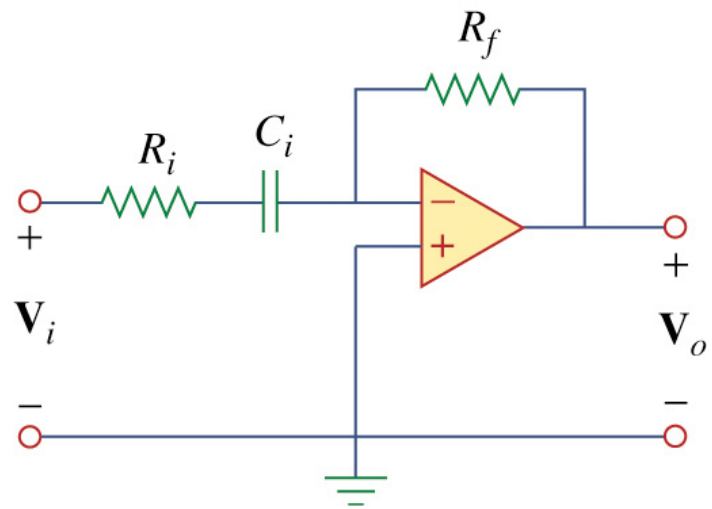

$$H(\omega) = \frac{V_0}{V_i} = -\frac{Z_f}{Z_i}$$

$$Z_i = R_i + \frac{1}{j\omega C_i}$$

$$H(\omega) = -\frac{R_f}{R_i + 1/j\omega C_i}$$

$$H(\omega) = -\frac{j\omega C_i R_f}{1 + j\omega C_i R_i}$$

Highpass filter with DC gain of $-R_f/R_i$

$$\omega_c = \frac{1}{R_i C_i}$$

Active Bandpass Filter

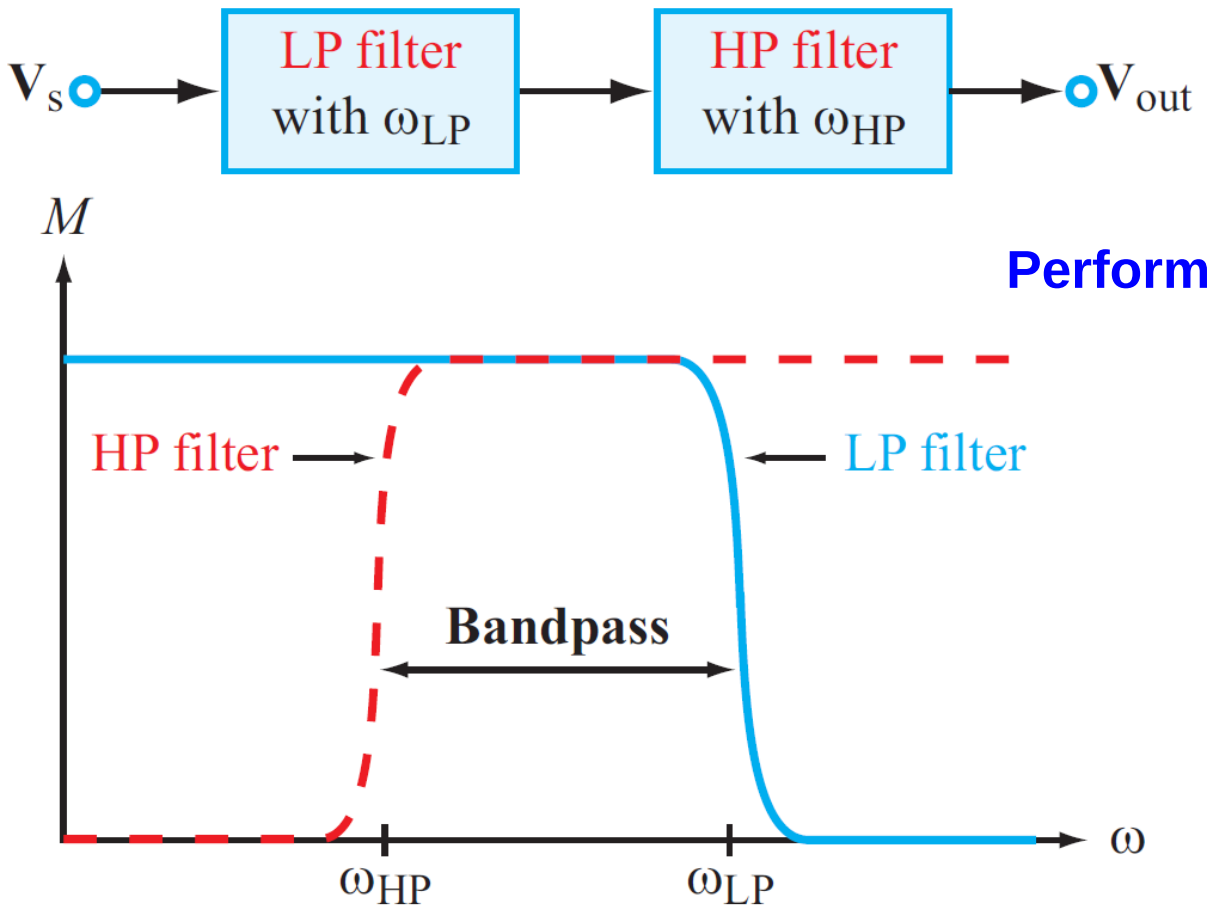

(a) Bandpass filter

Perform AND function

Active Bandpass Filter

Combine multiple stages to target frequency response

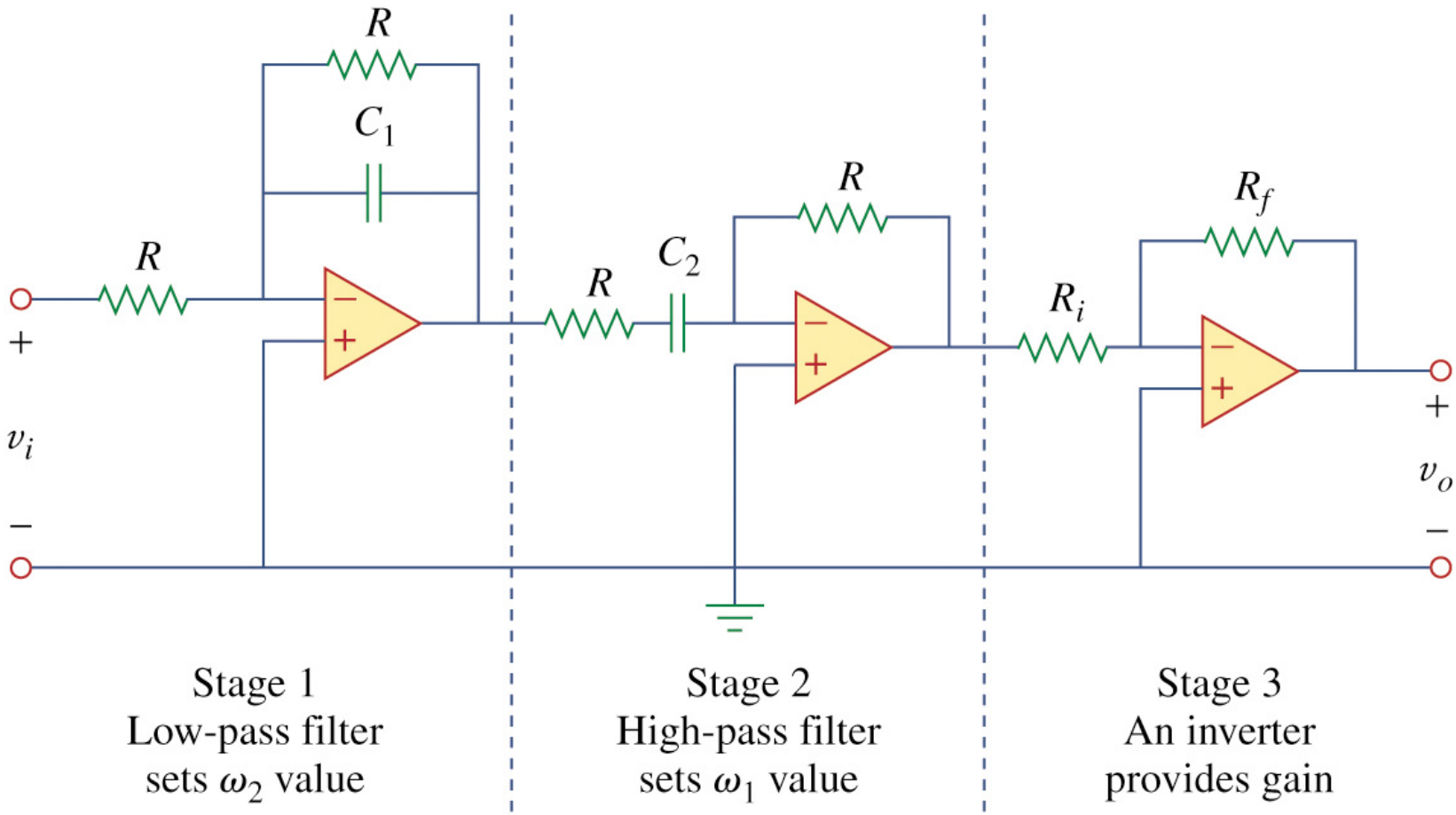

Active Bandpass Filter

$$H(\omega)=\left(-\frac{1}{1+j\omega C_1 R}\right)\left(-\frac{j\omega C_2 R}{1+j\omega C_2 R}\right)\left(-\frac{R_f}{R_i}\right)$$

$$H(\omega)=-\frac{R_f}{R_i}\frac{1}{1+j\omega C_1 R}\frac{j\omega C_2 R}{1+j\omega C_2 R}$$

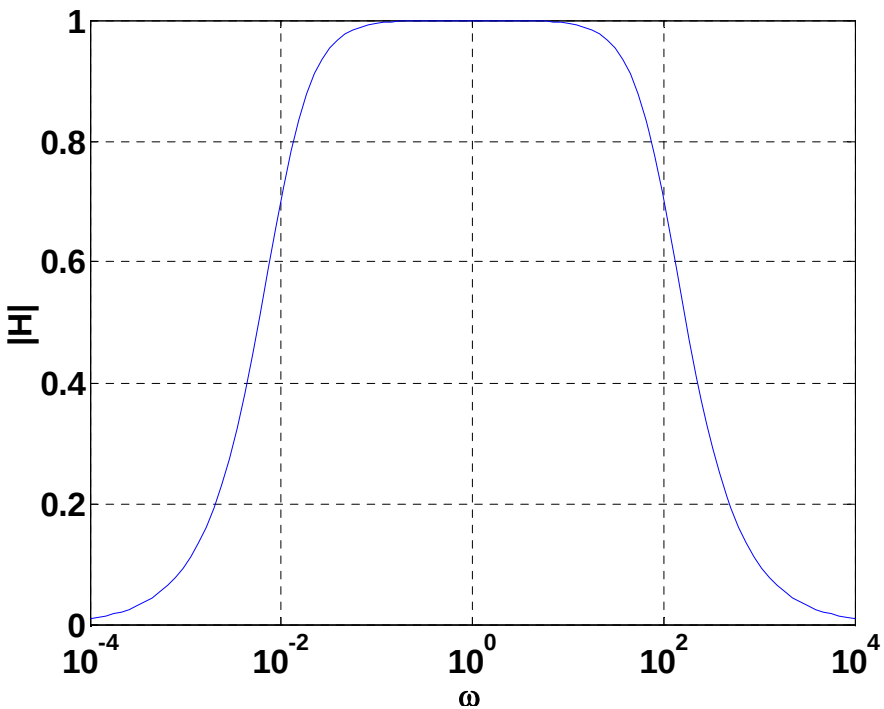

Estimate bandwidth:

$$\omega_2=\frac{1}{RC_1}$$

$$\omega_1=\frac{1}{RC_2}$$

$$\omega_0=\sqrt{\omega_1\omega_2}$$

$$B=\omega_2-\omega_1$$

Active Bandstop Filter

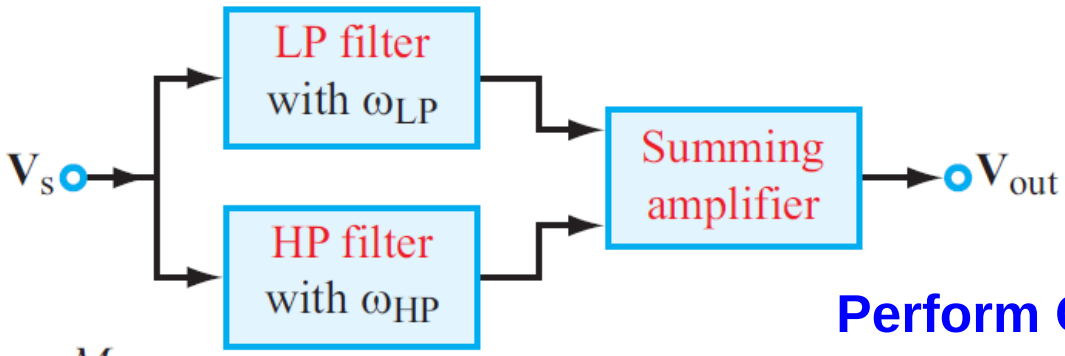

Perform OR function

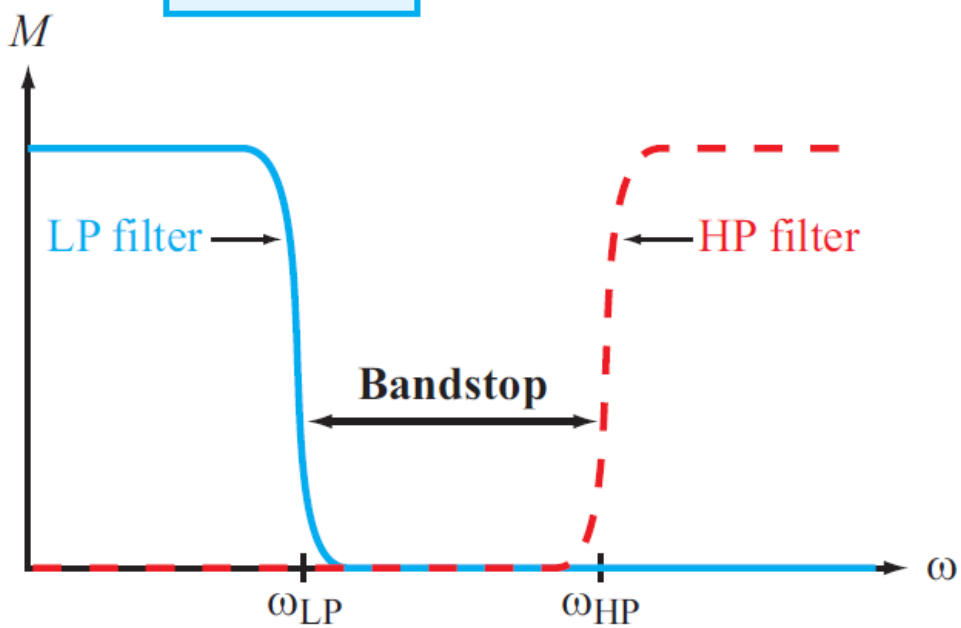

(b) Bandreject filter

Active Bandstop Filter

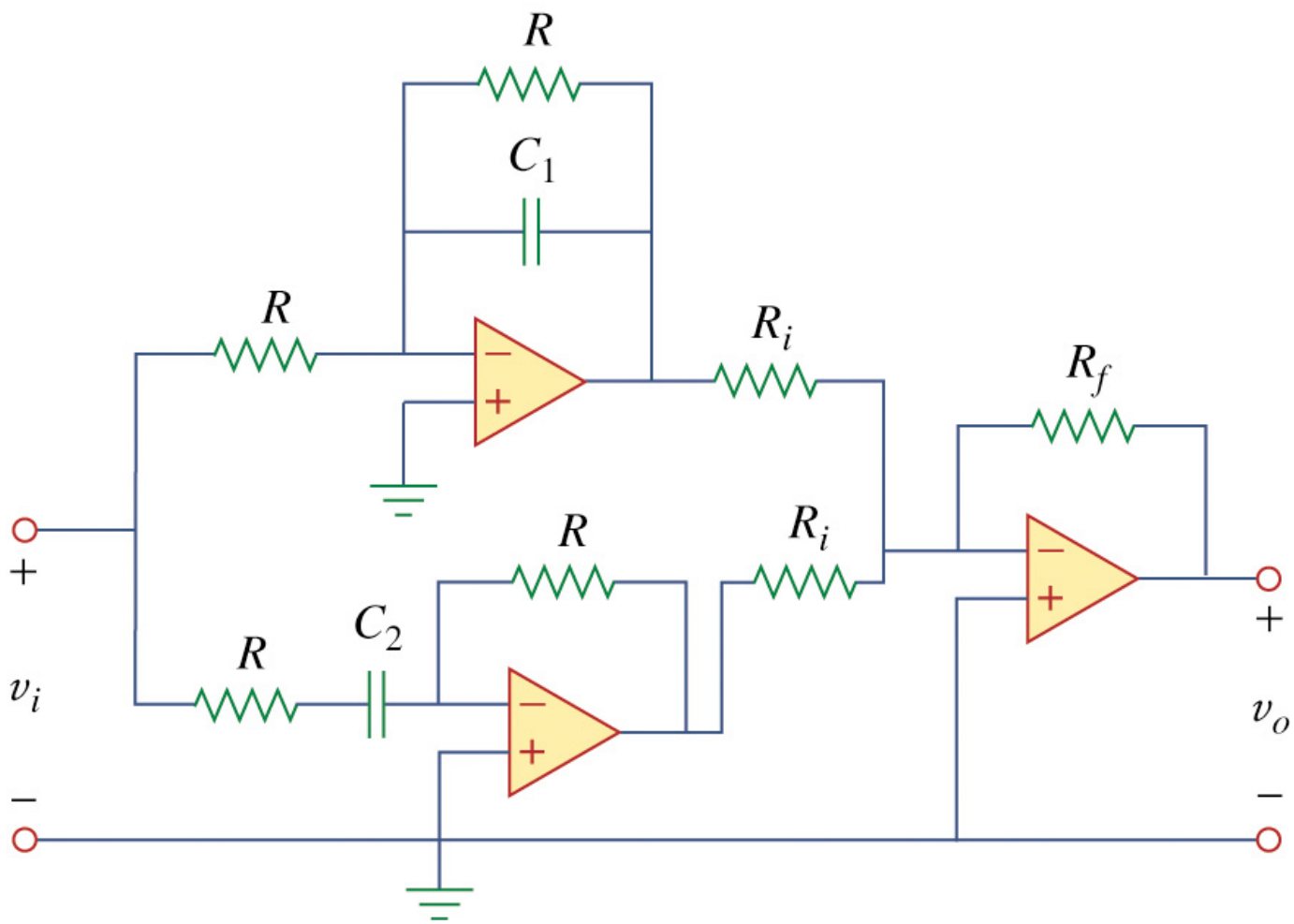

Active Band Reject Filter

$$H(\omega)=\frac{V_o}{V_i}=-\frac{R_f}{R_i}\left(-\frac{1}{1+j\omega C_1 R}-\frac{j\omega C_2 R}{1+j\omega C_2 R}\right)$$

Estimate bandwidth:

$$\omega_2=\frac{1}{RC_1} \qquad \omega_1=\frac{1}{RC_2} \qquad \omega_0=\sqrt{\omega_1\omega_2} \qquad B=\omega_2-\omega_1$$

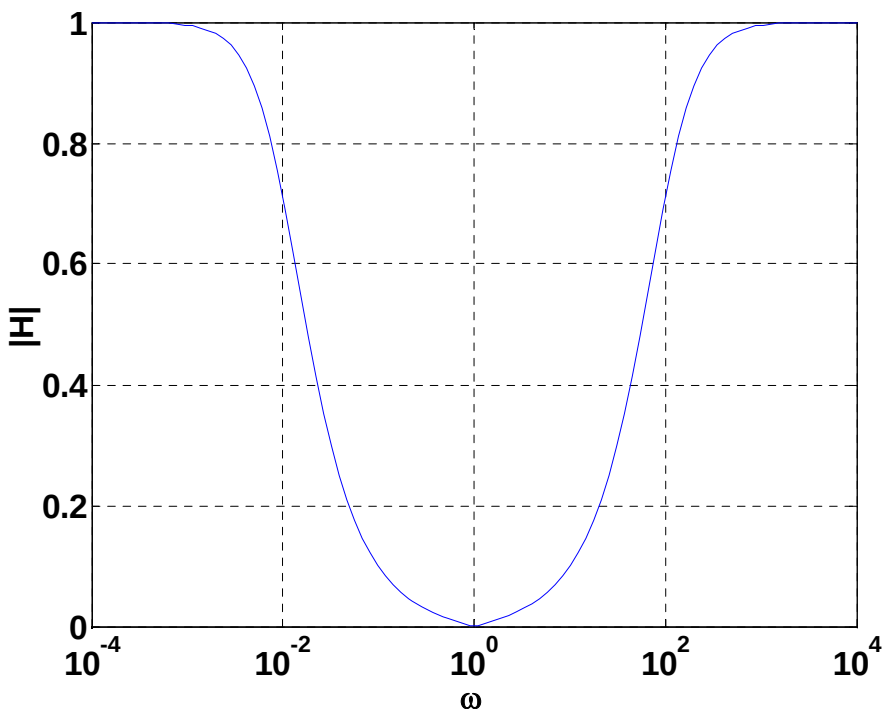

Center frequency gain

$$H(\omega_0)=\frac{R_f}{R_i}\frac{2\omega_1}{\omega_1+\omega_2}$$

Designing Better Filters

- 1. Choose pole/zero locations on complex plane
  - Further Exam this topic in EECS 216 and later classes
- 2. Choose circuit topology that is capable of realizing the poles and zeros from Step 1
- 3. Choose component values for circuits
  - Circuit synthesis

Active Implementation: Sallen-Key LP Filter

Negative Feedback
Causes phase difference
Between C1&C2

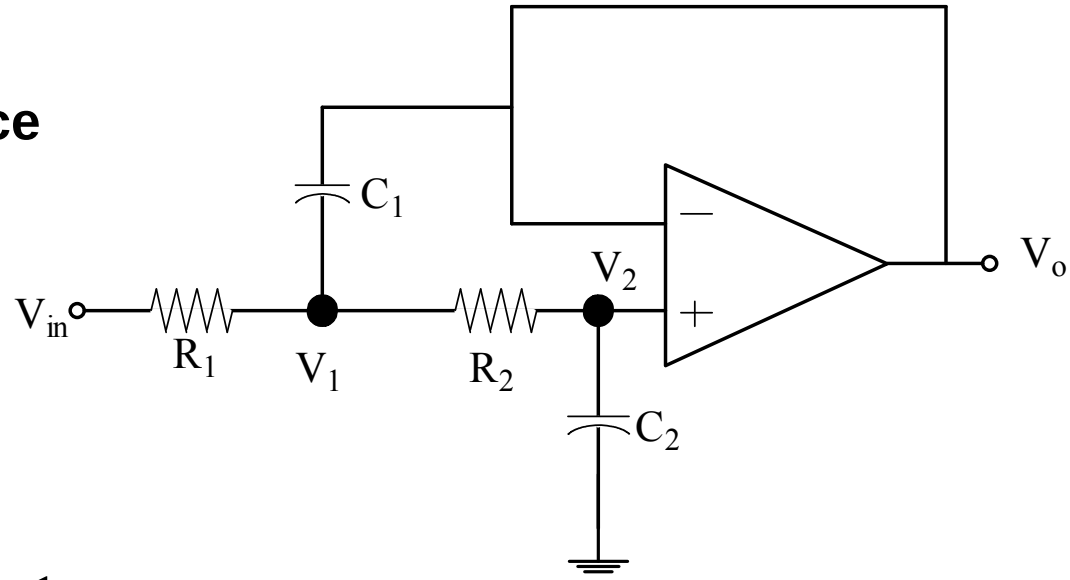

$$H(s) = \frac{1}{(R_1 R_2 C_1 C_2)s^2 + (R_1 + R_2)C_2 s + 1}$$

$$\omega_c = \left[\frac{1}{R_1 R_2 C_1 C_2}\right]^{1/2} \qquad \alpha = \left(\frac{R_1 + R_2}{2R_1 R_2 C_1}\right)$$

Active Implementation: Sallen-Key LP Filter

Negative Feedback
Causes phase difference
Between C1&C2

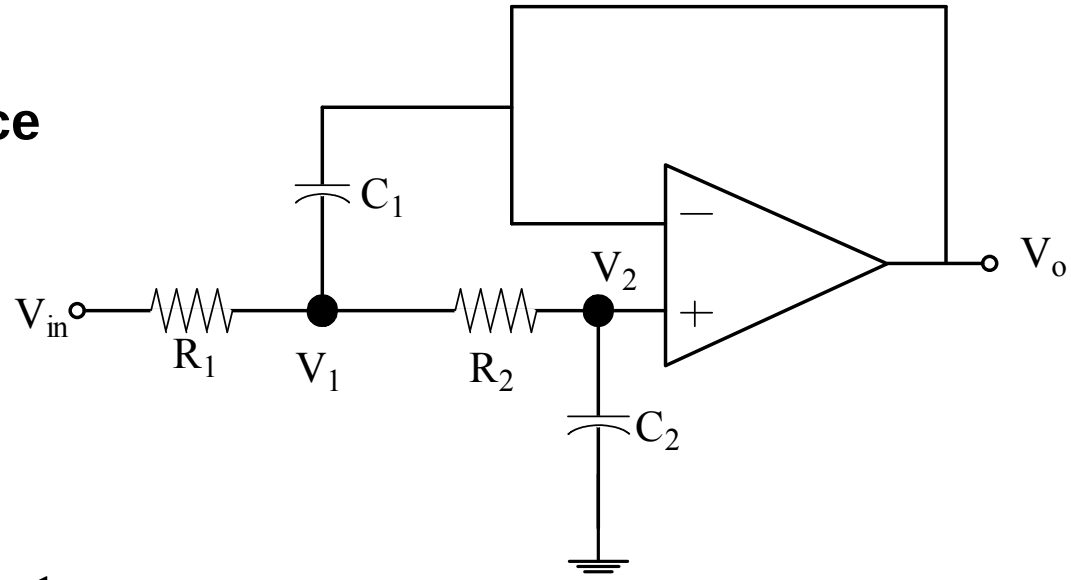

$$H(s) = \frac{1}{(R_1 R_2 C_1 C_2)s^2 + (R_1 + R_2)C_2 s + 1}$$

$$\omega_c = \left[\frac{1}{R_1 R_2 C_1 C_2}\right]^{1/2} \qquad \alpha = \left(\frac{R_1 + R_2}{2R_1 R_2 C_1}\right)$$

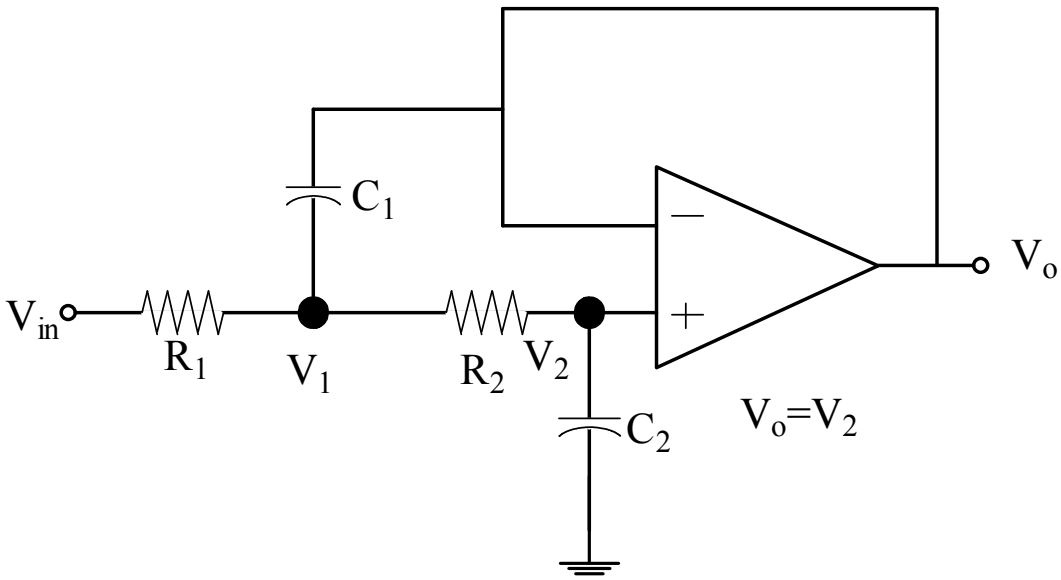

Negative Feedback
Causes phase difference
Between C1&C2

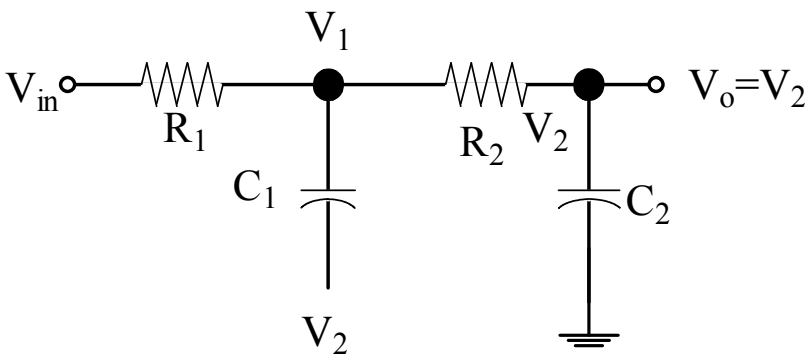

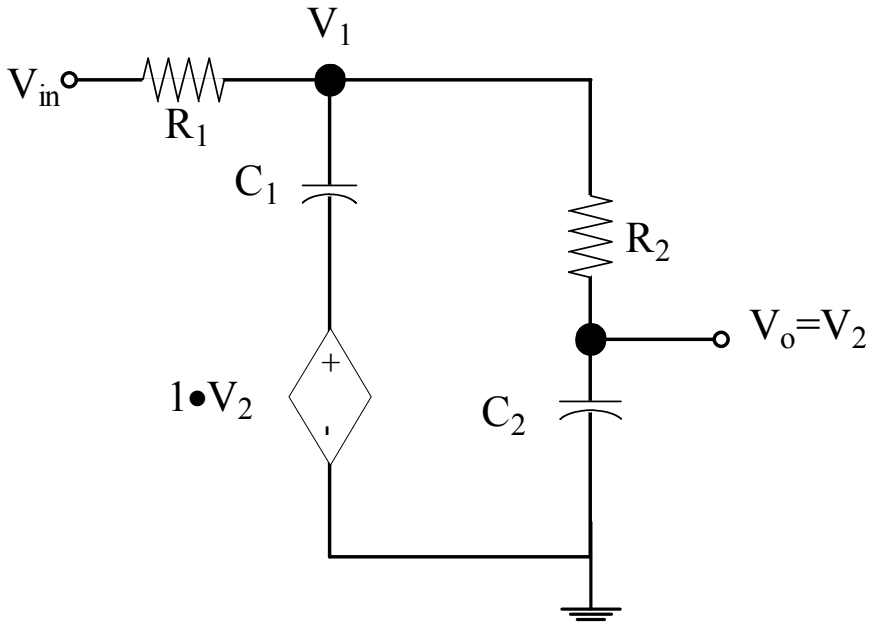

Phase Issues

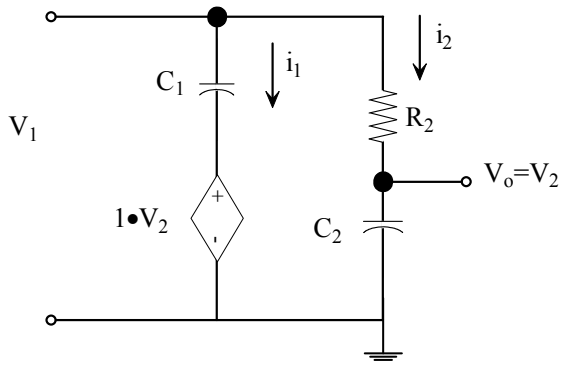

i_1 leads i_2 by +90°

v_{c1} leads v_{c2} by +90°

$P_1=i_1v_{c1}$ is 180° out of phase with $P_2=i_2v_{c2}$ just like an L-C Circuit!

When one element is storing power the other is supplying it.

$$V_2 = V_{C2} = \left(\frac{1}{sR_2C_2+1}\right)V_1$$

$$V_{C1} = V_1 - V_2 = \left(\frac{sR_2C_2}{sR_2C_2+1}\right)V_1$$

$$\left(\frac{V_{C1}}{V_{C2}}\right) = sR_2C_2 \rightarrow j\omega R_2C_2$$

$$i_{c1} = sC_1V_{C1} = \left(\frac{s^2R_2C_1C_2}{sR_2C_2+1}\right)V_1$$

$$i_{c2} = sC_2V_{C2} = \left(\frac{sC_2}{sR_2C_2+1}\right)V_1$$

$$\left(\frac{i_{c1}}{i_{c2}}\right) = sR_2C_1 \rightarrow j\omega R_2C_1$$

Sallen-Key High Pass Filter

$$2\alpha = 2\zeta\omega_0 = \frac{\omega_0}{Q} = \frac{C_1 + C_2}{R_2 C_1 C_2}.$$

$$H(s) = \frac{s^2}{s^2 + \underbrace{2\pi\left(\frac{f_0}{Q}\right)}_{2\zeta\omega_0 = \frac{\omega_0}{Q}} s + \underbrace{(2\pi f_0)^2}_{\omega_0^2}},$$

$$\omega_0 = 2\pi f_0 = \frac{1}{\sqrt{R_1 R_2 C_1 C_2}}$$

$$\frac{1}{2\zeta} = Q = \frac{\omega_0}{2\alpha} = \frac{\sqrt{R_1 R_2 C_1 C_2}}{R_1(C_1 + C_2)}.$$

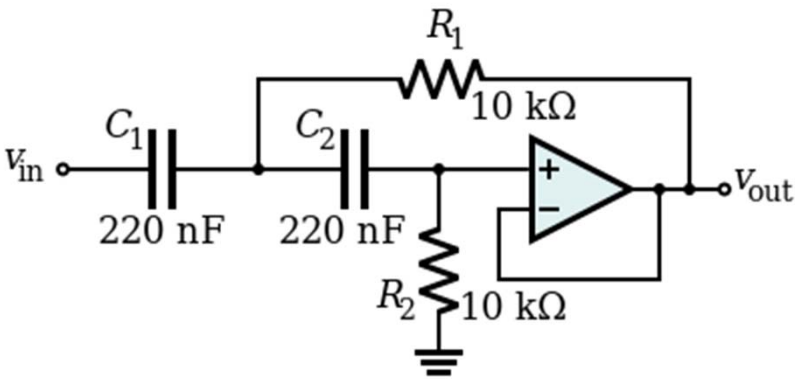

From http://en.wikipedia.org/wiki/Sallen%E2%80%93Key_topology

Sallen-Key Bandpass Filter

- Sallen-Key (2nd order) bandpass filters

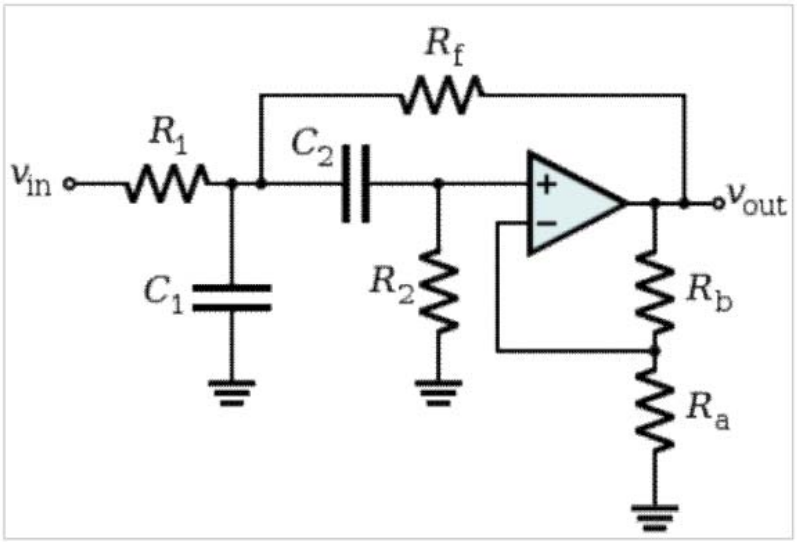

Figure 5: A bandpass filter realized with a VCVS topology.

$$H = \frac{V_{out}(s)}{V_{in}(s)}$$

$$= \frac{\overbrace{\left(1+\frac{R_b}{R_a}\right)\frac{1}{C_1R_1}}^{2\zeta\omega_0 G} s}{\underbrace{\left(\frac{\frac{R_1}{R_f}+1}{C_1C_2R_1R_2}\right)}_{\omega_0^2} + \underbrace{\left(\frac{1}{C_1R_1}+\frac{1}{C_1R_2}+\frac{1}{C_2R_2}-\frac{R_b}{C_1R_aR_f}\right)}_{2\zeta\omega_0=\frac{\omega_0}{Q}} s + s^2}$$