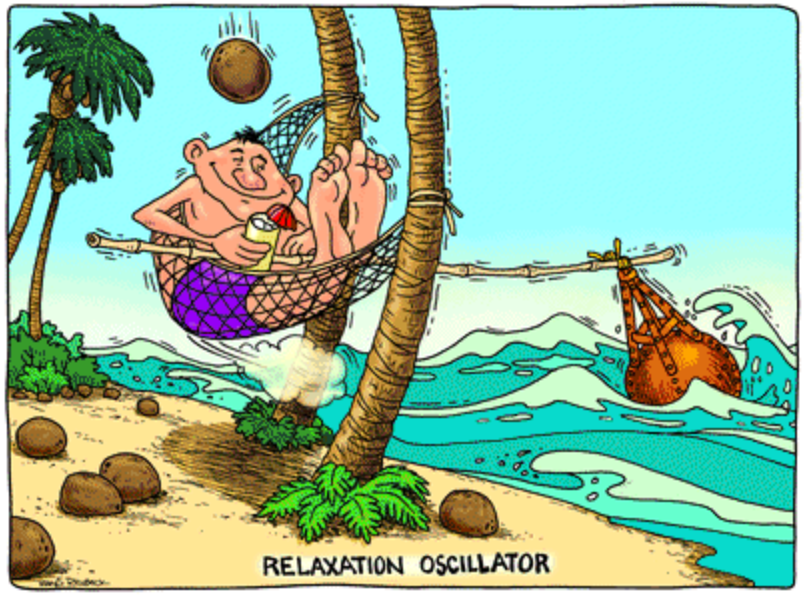

SECOND ORDER CIRCUITS IN THE TIME DOMAIN: INTRO, SERIES, PARALLEL CASES, GENERAL SOC, BOUNDARY CONDITION MATCHING

© Fred Terry
Fall, 2013

Simple Second Order System Example

- We have a constant acceleration a_0 beginning at t=0. What is x(t)?

$$a = \frac{d^2x}{dt^2} = a_0$$

Second Order Circuits

- Exactly Two Energy Storage Elements (2 L's, 2 C's, or 1 L & 1 C)
- Resistors, Independent and Dependent Sources
- Result with be a Second Order Ordinary Differential Equation in t
- Useful for Understanding/Modeling Real Circuits & Other Physical Systems (e.g. Transmission Lines)
- Useful for Filter Circuits
- Higher Order Circuits Have Responses With First Order and/or Second Order Terms

General Approach: Time Domain

- Use KVL, KCL, Circuit Element Laws to find differential equation for circuit problem
  - Later we will examine a way to use nodal or mesh analysis-Laplace Transforms
- Find the *Initial Conditions* (same as boundary conditions)
  - <u>Must Have 1 Initial Condition Per Energy Storage Element</u>
- Find the *Natural Solution* (homogenous solution)
  - This is the same as the unforced circuit response
  - <u>Will Have 2 Independent Solutions</u>
- Find the *Forced Solution* (particular solution)
- Add the Forced+Natural Solutions to get the *Complete Solution*
- Eliminate the Unknowns (2 unknowns in a SOC) using the Initial Conditions

Series RLC:

- Analysis of Important Case
- Introduce the concept of damping
- Illustration of General Methods
- Systematic look at the *only* solutions for 2nd order systems
- We will start with a natural decay problem
- Then a step response problem

Natural Response

Note $i_L = i_C = i$ (Passive Sign Convention)
Find Differential Equation for i(t)

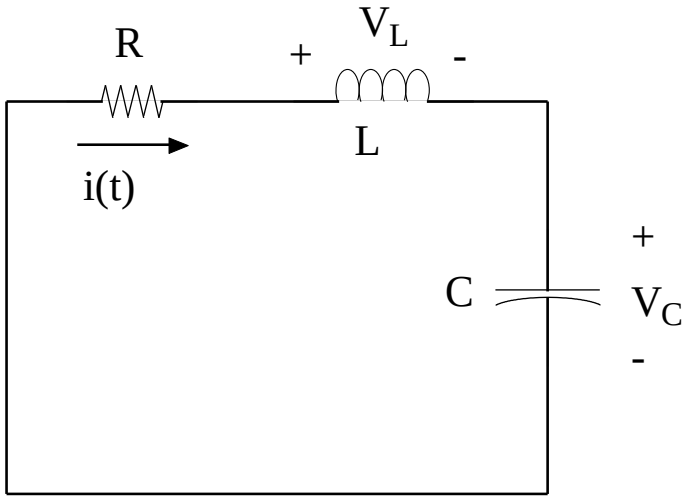

Natural Response

Note $i_L = i_C = i$ (Passive Sign Convention)

Find Differential Equation for v(t)

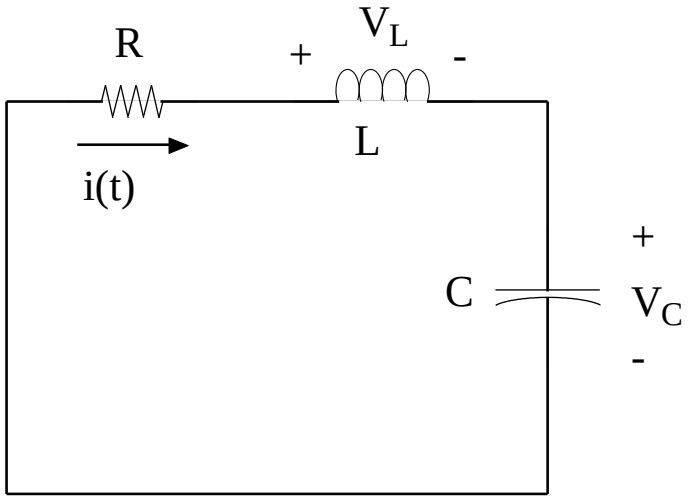

Analyze Result: Find Natural Solutions

$$L\frac{\partial^2 i}{\partial t^2}+R\frac{\partial i}{\partial t}+\frac{1}{C}i=0$$

$$\frac{\partial^2 i}{\partial t^2}+\left(\frac{R}{L}\right)\frac{\partial i}{\partial t}+\left(\frac{1}{LC}\right)i=0$$

$$\frac{\partial^2 i}{\partial t^2}+2\alpha\frac{\partial i}{\partial t}+\omega_0^2 i=0$$

$$\alpha\equiv\left(\frac{R}{2L}\right)\ for\ this\ circuit$$

$$\omega_0^2\equiv\left(\frac{1}{LC}\right)\ for\ this\ circuit$$

$$Trial\ Solution:$$

$$i=Ae^{st}$$

Characteristic Equation

$$\frac{\partial^2 i}{\partial t^2} + 2\alpha \frac{\partial i}{\partial t} + \omega_0^2 i = 0$$

Trial Solution:

$$i = Ae^{st}$$

Result:

$$s^2 + 2\alpha s + \omega_0^2 = 0$$

Characteristic Equation

$$s_{1,2} = -\alpha \pm \left[\alpha^2 - \omega_0^2\right]^{1/2}$$

Three Possibilities:

$\alpha > \omega_0$ <u>*Overdamped Response*</u>

$s_{1,2}$ *are real numbers (negative)*

$$i_n(t) = A_1 e^{s_1 t} + A_2 e^{s_2 t}$$

$\alpha < \omega_0$ <u>*Underdamped Response*</u>

$s_{1,2}$ *are complex numbers*

$$i_n(t) = A_1 e^{s_1 t} + A_2 e^{s_2 t}$$

$$s_{1,2} = -\alpha \pm \left[\alpha^2 - \omega_0^2\right]^{1/2} = -\alpha \pm j\omega_d$$

$$\omega_d = \left[\omega_0^2 - \alpha^2\right]^{1/2}$$

damped frequency of oscillation

$$i_n(t) = \left[B_1 \cos(\omega_d t) + B_2 \sin(\omega_d t)\right] e^{-\alpha t}$$

Characteristic Equation

$$\frac{\partial^2 i}{\partial t^2} + 2\alpha \frac{\partial i}{\partial t} + \omega_0^2 i = 0$$

Trial Solution:

$$i = Ae^{st}$$

Result:

$$s^2 + 2\alpha s + \omega_0^2 = 0$$

Characteristic Equation

$$s_{1,2} = -\alpha \pm \left[\alpha^2 - \omega_0^2\right]^{1/2}$$

Third Possibility:

$\alpha = \omega_0$ <u>*Critically Damped Response*</u>

$$s_1 = s_2 = -\alpha$$

$$i_n(t) = A_1 e^{-\alpha t} + A_2 e^{-\alpha t} = (A_1 + A_2)e^{-\alpha t}$$

$$i_n(t) = A_3 e^{-\alpha t}$$

What is the problem with this?

Try Solving Complete Problem

$$Assume\, Critical\ Damping$$

$$Assume\, i(0) = i_{L0} \neq 0$$

$$Assume\, V_c(0) = V_{C0} \neq 0$$

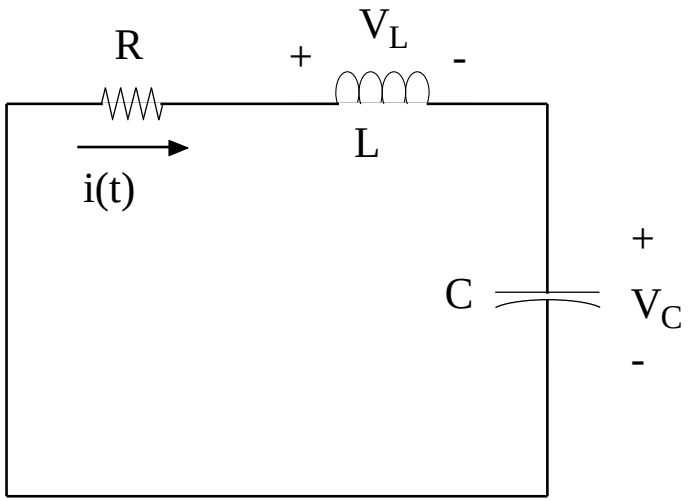

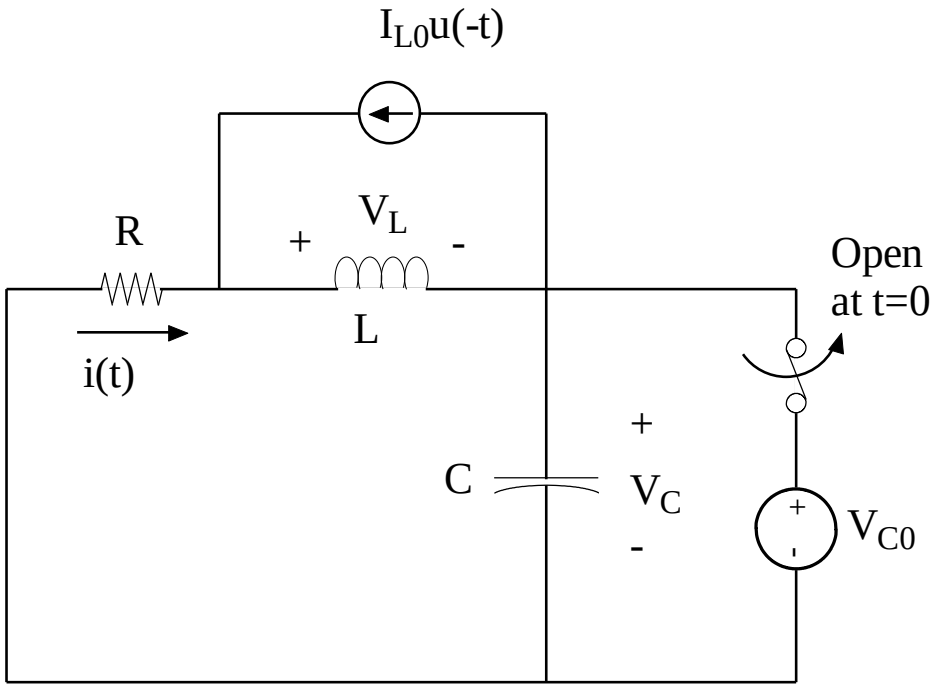

Try Solving Complete Problem

$$Assume\, Critical\ Damping$$

$$Assume\, i(0) = i_{L0} \neq 0$$

$$Assume\, V_c(0) = V_{C0} \neq 0$$

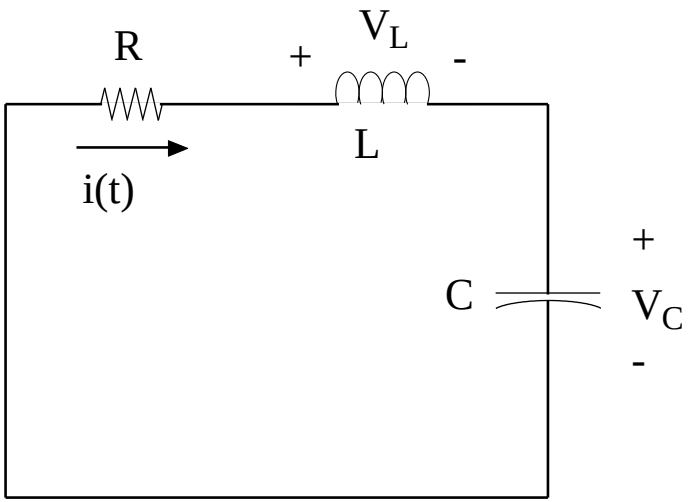

Critical Damping

$$\frac{\partial^2 i}{\partial t^2} + 2\alpha \frac{\partial i}{\partial t} + \omega_0^2 i = 0$$

$$\alpha = \omega_0 \quad \underline{Critically\ Damped\ Response}$$

$$s_1 = s_2 = -\alpha$$

$$New\,Trial\ Solution$$

$$i_n(t) = A_1 e^{-\alpha t} + A_2 t e^{-\alpha t} = (A_1 + A_2 t) e^{-\alpha t}$$

Solution Works and Provides 2nd Linearly Independent Time Response Function

$$\frac{\partial^2 i}{\partial t^2} + 2\alpha \frac{\partial i}{\partial t} + \omega_0^2 i = 0$$

$$Trial\ Solution:$$

$$i = Ae^{st}$$

$$Result:$$

$$s^2 + 2\alpha s + \omega_0^2 = 0$$

$$Characteristic\ Equation$$

$$s_{1,2} = -\alpha \pm \left[\alpha^2 - \omega_0^2\right]^{1/2}$$

General Response for *Any* SOC

$$\frac{\partial^2 i}{\partial t^2} + 2\alpha \frac{\partial i}{\partial t} + \omega_0^2 i = f(t)$$

Natural/Homogeneous Equation

$$\frac{\partial^2 i}{\partial t^2} + 2\alpha \frac{\partial i}{\partial t} + \omega_0^2 i = 0$$

Only Three Possibilities for Natural Solution:

$\alpha > \omega_0$ *Overdamped Response*

$s_{1,2}$ *are real numbers (negative)*

$$i_n(t) = A_1 e^{s_1 t} + A_2 e^{s_2 t}$$

$\alpha < \omega_0$ *Underdamped Response*

$s_{1,2}$ *are complex numbers*

$$i_n(t) = A_1 e^{s_1 t} + A_2 e^{s_2 t}$$

$$s_{1,2} = -\alpha \pm \left[\alpha^2 - \omega_0^2\right]^{1/2} = -\alpha \pm j\omega_d$$

$$\omega_d = \left[\omega_0^2 - \alpha^2\right]^{1/2}$$

damped frequency of oscillation

$$i_n(t) = \left[B_1 \cos(\omega_d t) + B_2 \sin(\omega_d t)\right] e^{-\alpha t}$$

$\alpha = \omega_0$ *Critically Damped Response*

$$s_1 = s_2 = -\alpha$$

$$i_n(t) = A_1 e^{-\alpha t} + A_2 t e^{-\alpha t} = (A_1 + A_2 t) e^{-\alpha t}$$

Complete solution then given by:

$$i(t) = i_f(t) + i_n(t)$$

- Matching initial conditions/boundary conditions removes the two unknowns A_1, A_2
- Time constants are determined by the circuit topology-natural solution not by the forcing function
- We will examine special techniques for finding the forced solution for time varying $f(t)$

Solving Natural Decay Problem

$$Assume\, i(0) = i_{L0} \neq 0$$

$$Assume\, V_c(0) = V_{C0} \neq 0$$

- Find α, $\omega_0 \rightarrow$Damping Case
- Source Free Case

  $\rightarrow$Natural Soln=Complete Soln.
- Match Initial Conditions (2) to Eliminate 2 remaining unknowns

  1st is easy $i(0)=i_{L0}$

  Look for KCL and/or KVL conditions to match to 2nd

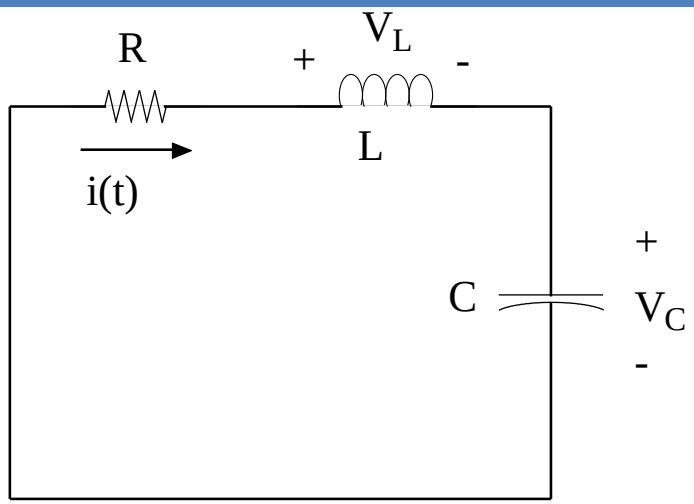

$$V_C = -\left(iR + V_L\right) \quad KVL$$

$$= -\left(iR + L\frac{\partial i_L}{\partial t}\right)$$

$$V_C(0) = -\left(i(0)R + L\left.\frac{\partial i_L}{\partial t}\right|_{t=0}\right)$$

$$V_{C0} = -\left(i_{L0}R + L\left.\frac{\partial i_L}{\partial t}\right|_{t=0}\right)$$

Natural Decay Problem: Numeric Examples

$L=1\mu H$ $C=1\mu F$ $R=3\Omega$

$i_{L0}=0$ $V_{C0}=5V$

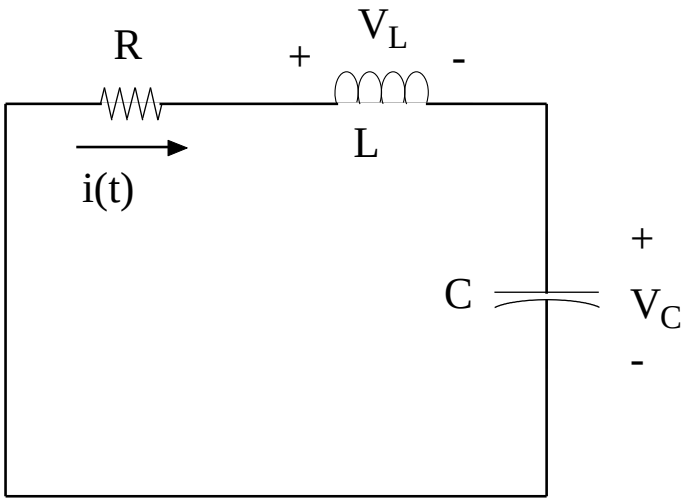

Damping Natural Response Example

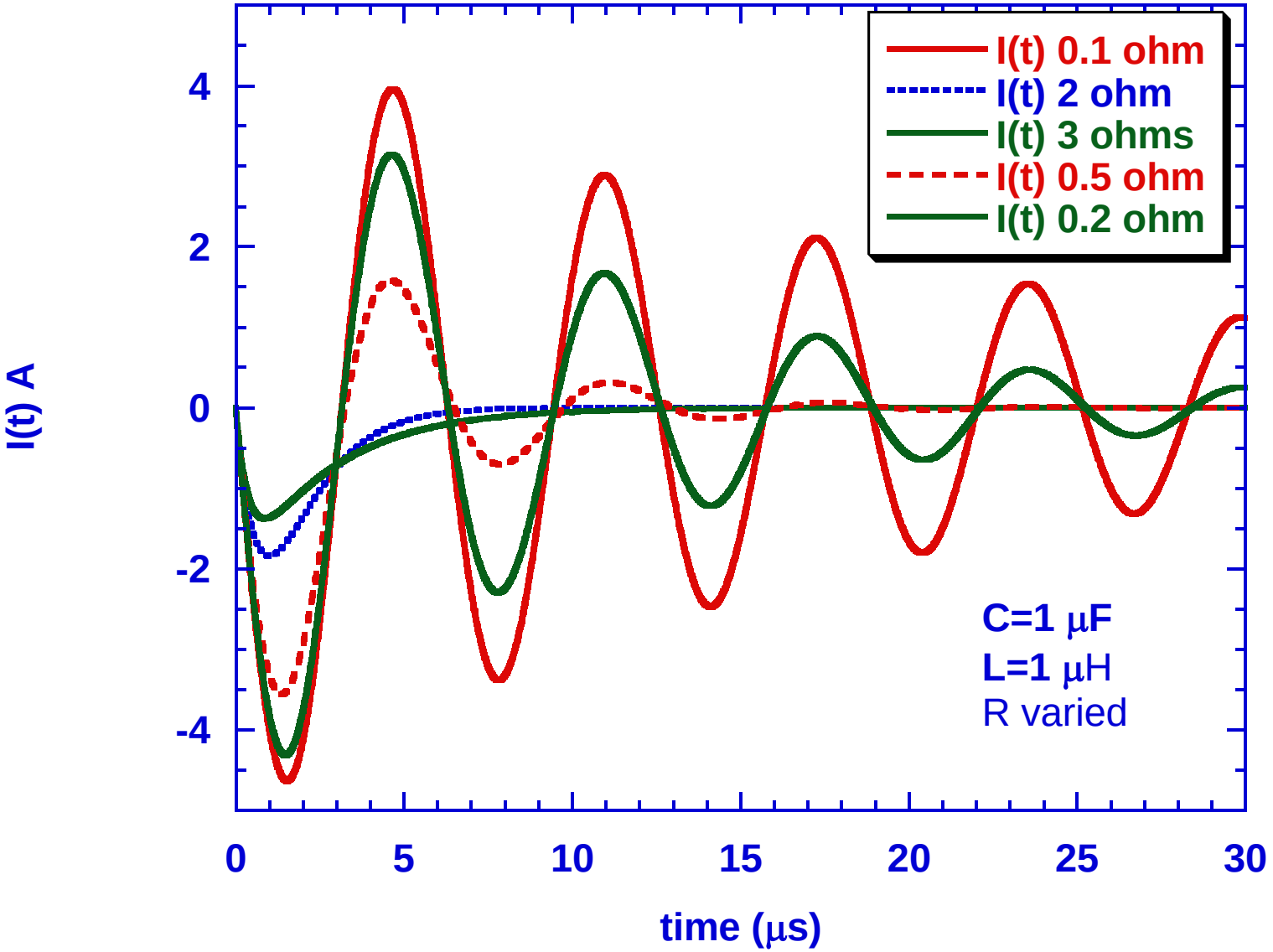

Over-Damped Response

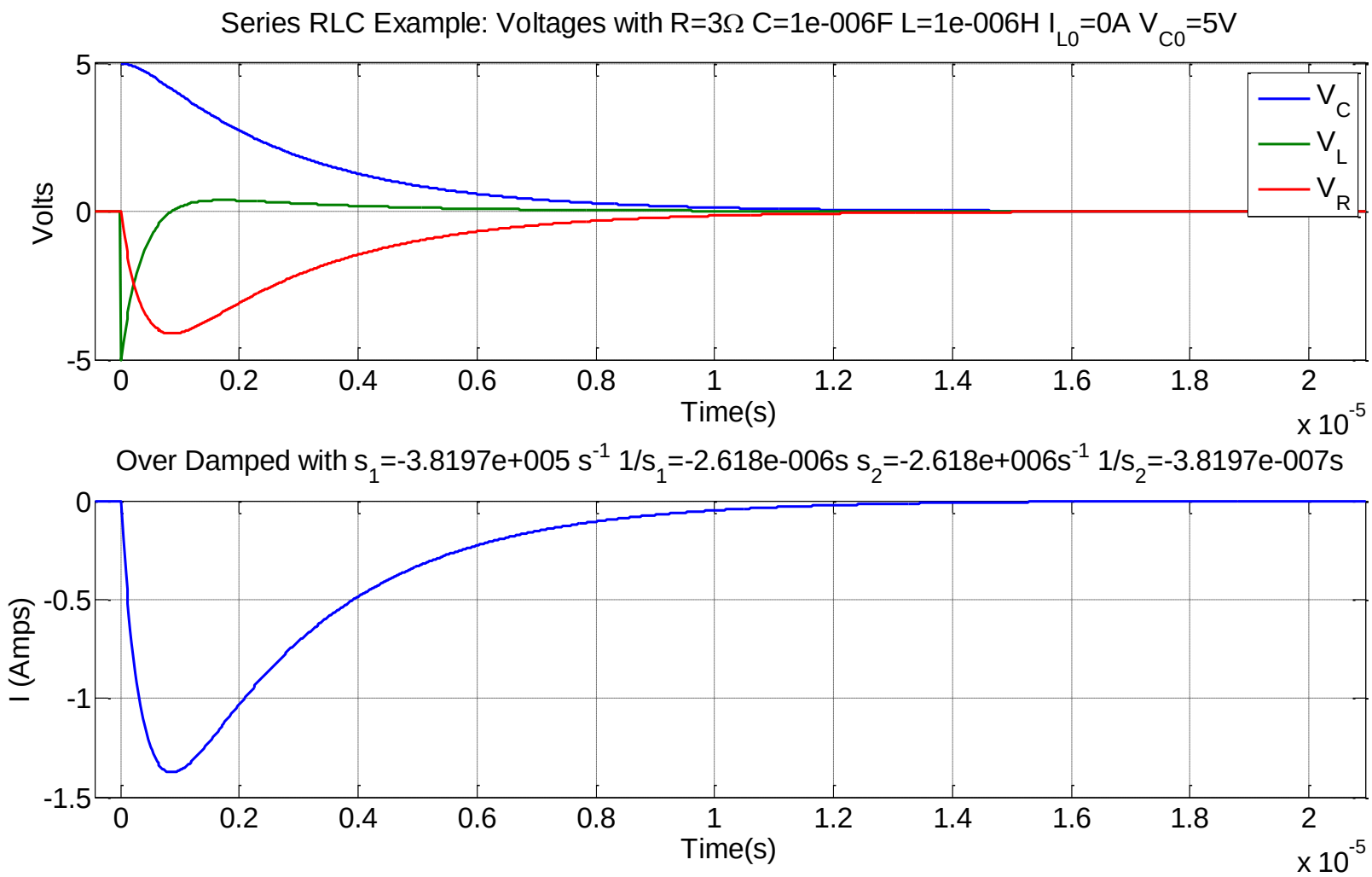

Over-Damped Response Power/Energy

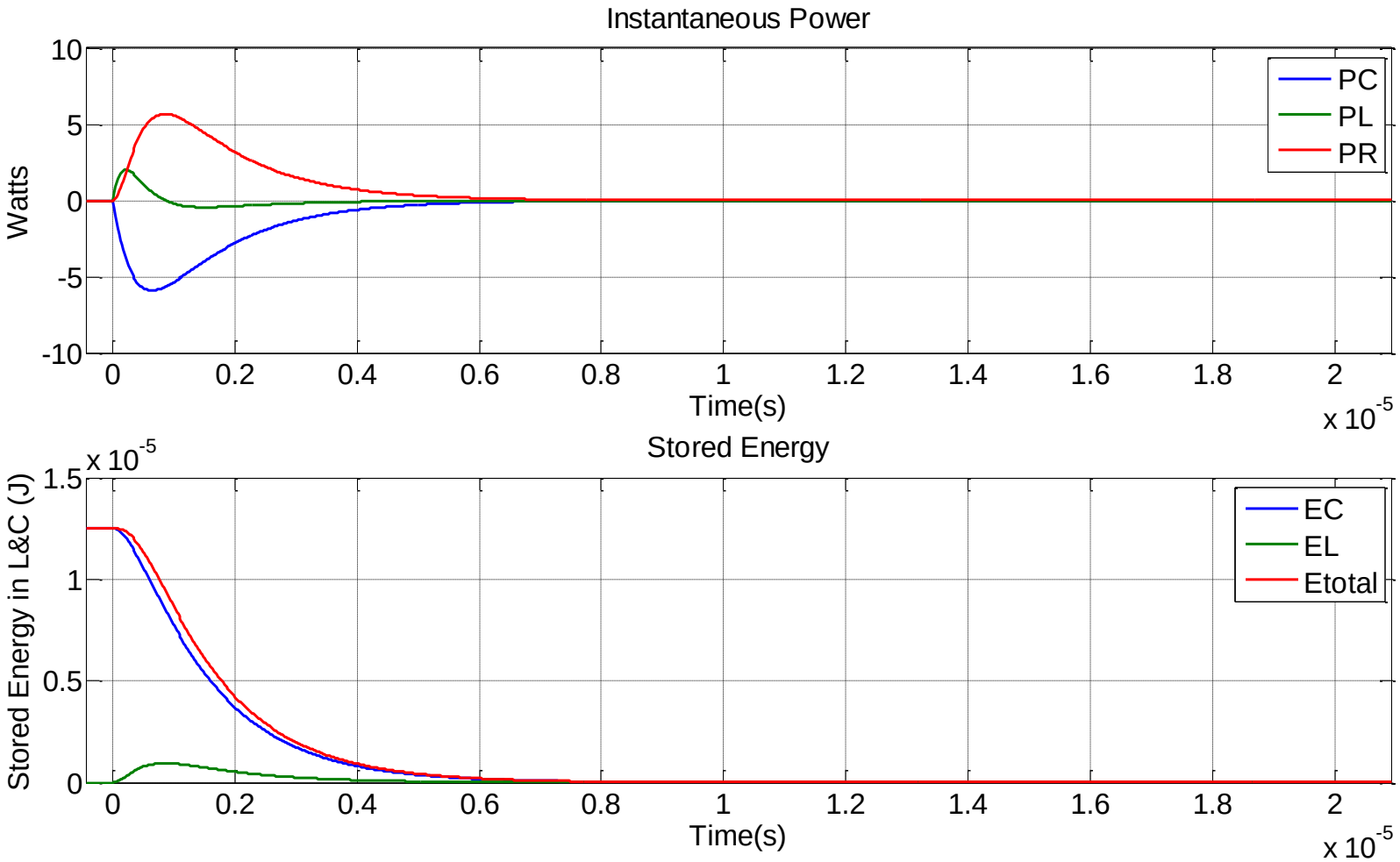

Critically Damped Response

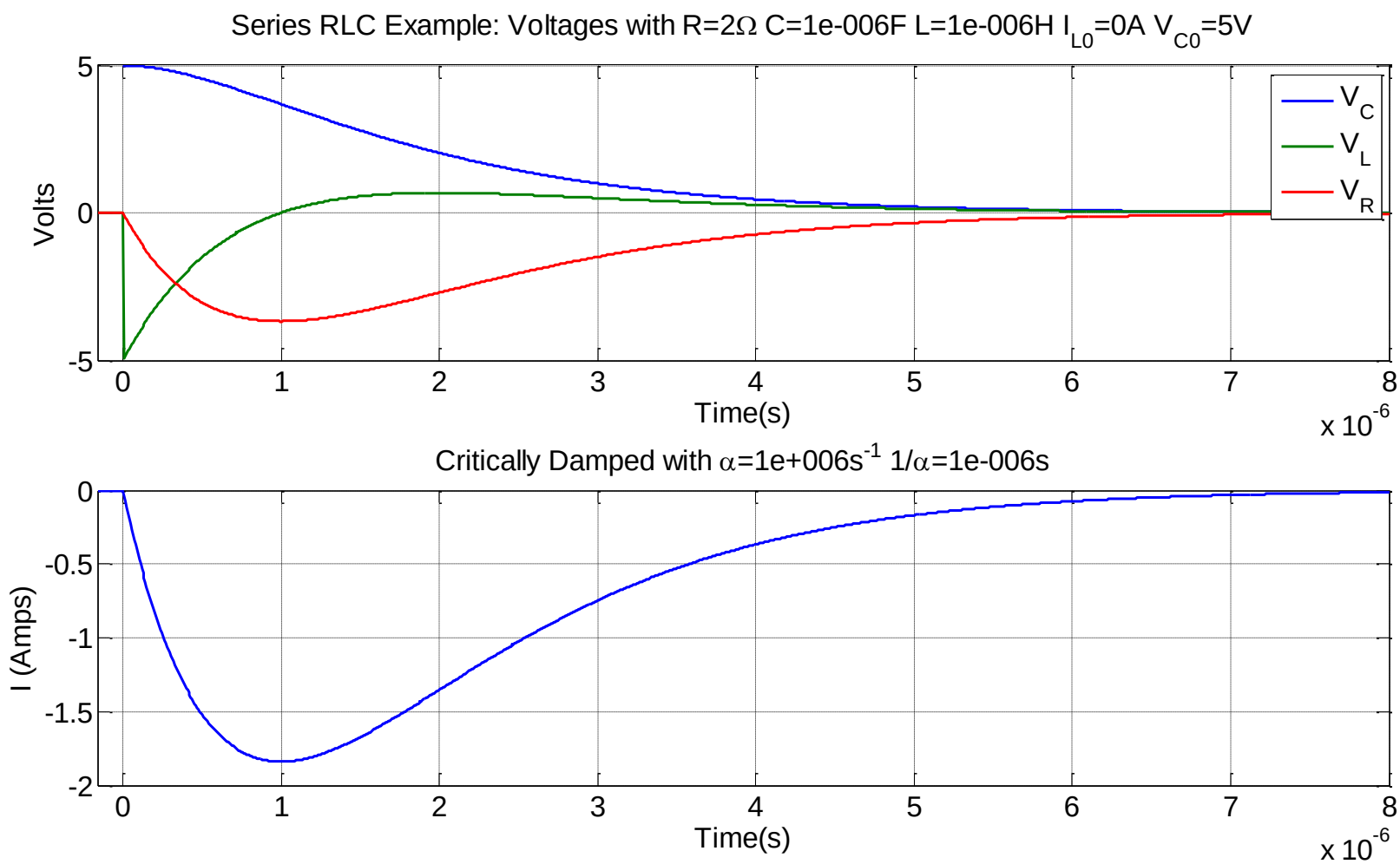

Critically Damped Response Power/Energy

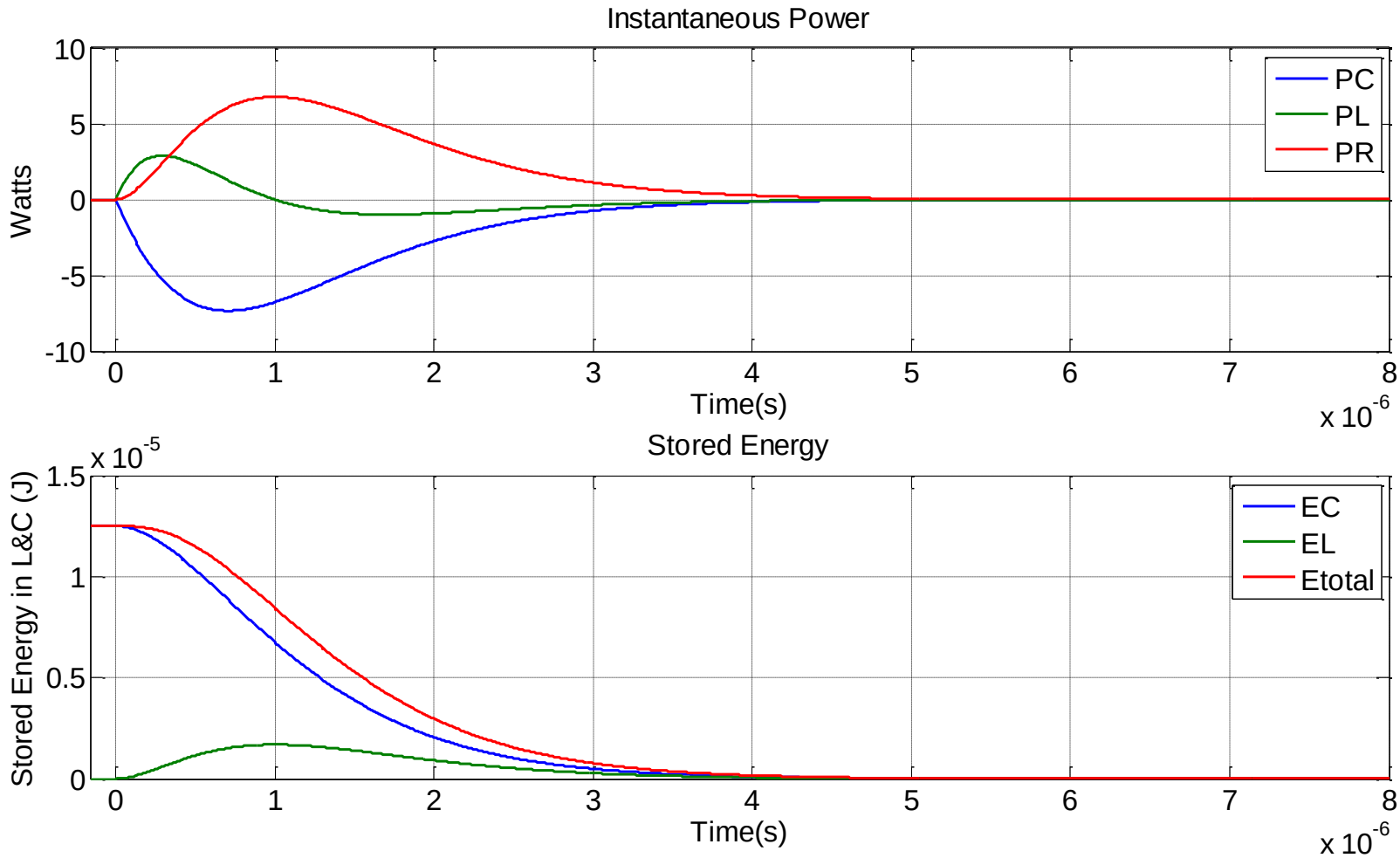

Under-Damped Response

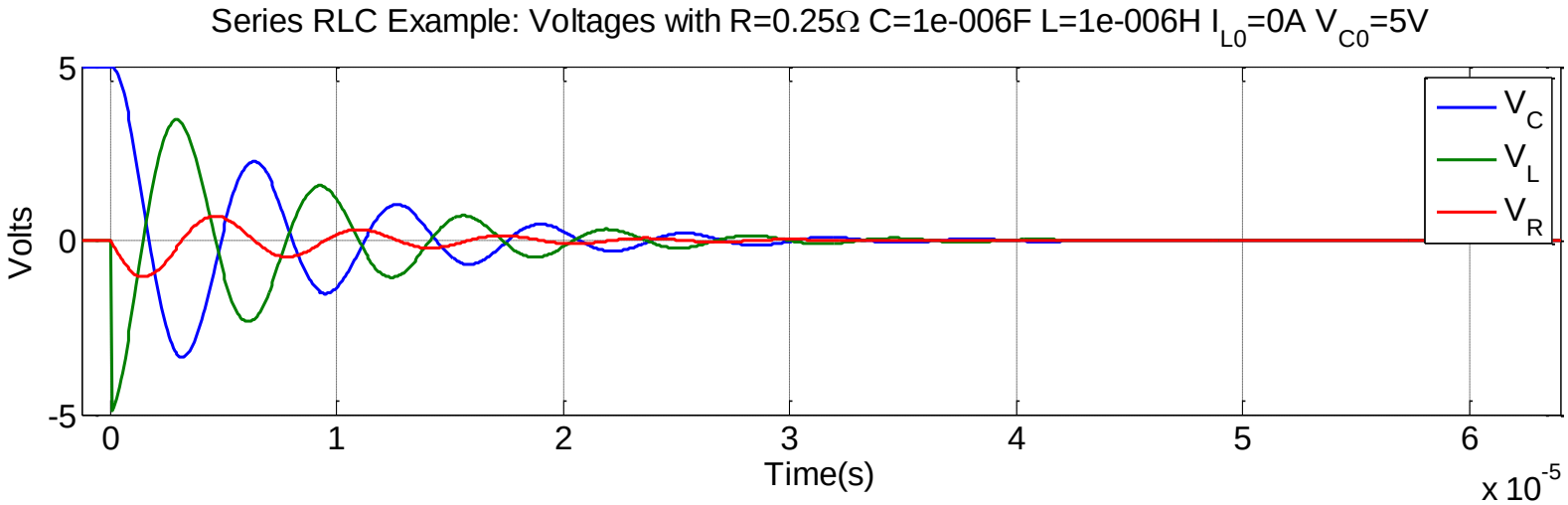

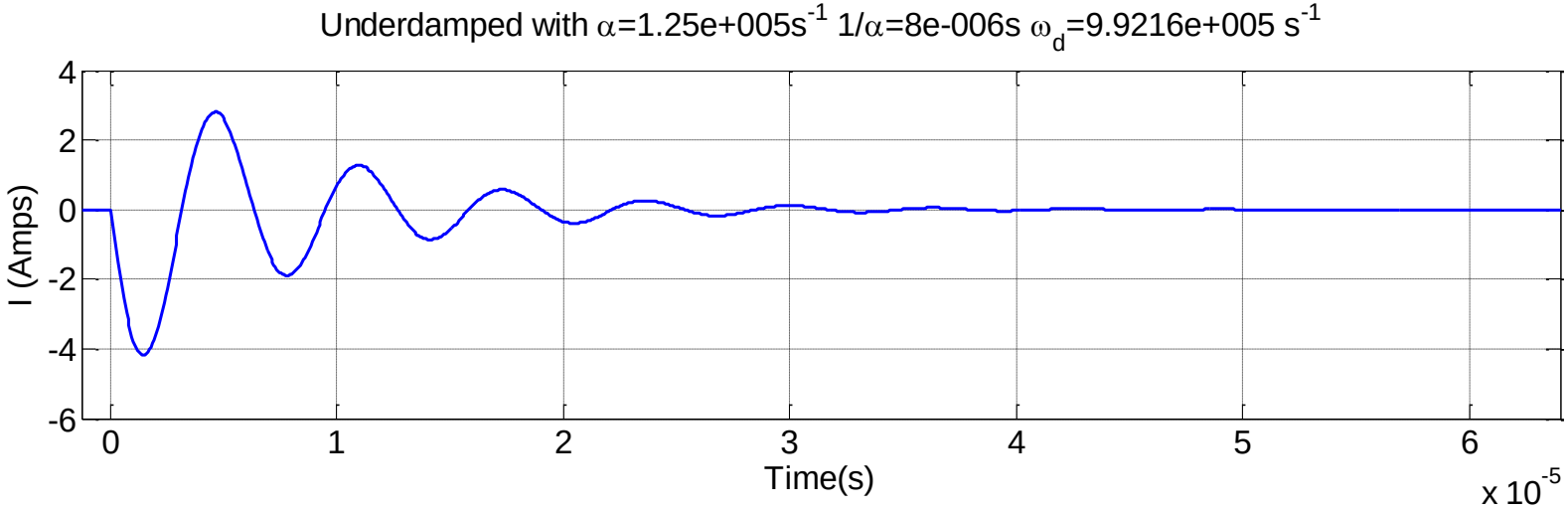

Under-Damped Response Power/Energy

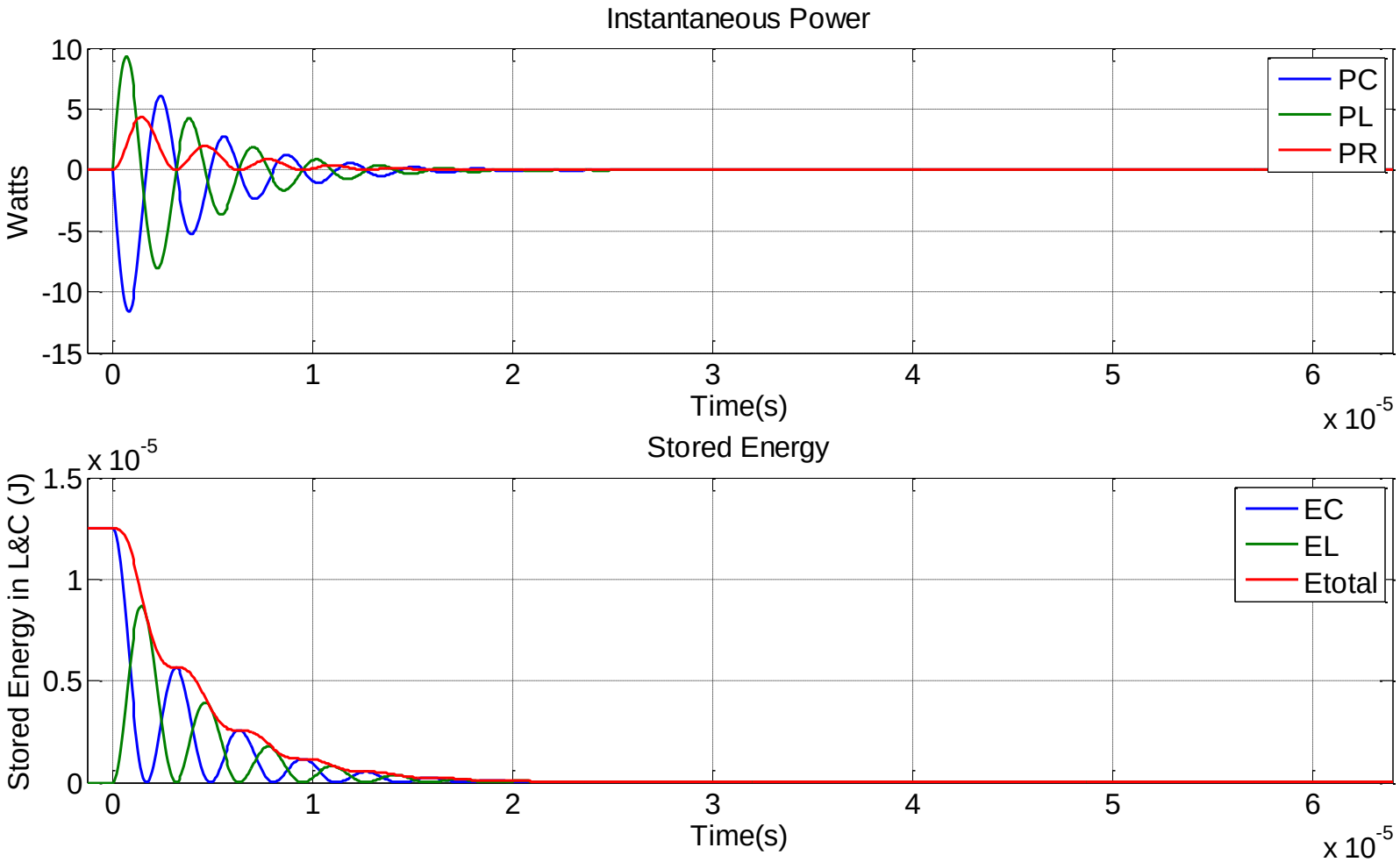

Step Response

Find Differential Equation

This time we'll do V_C

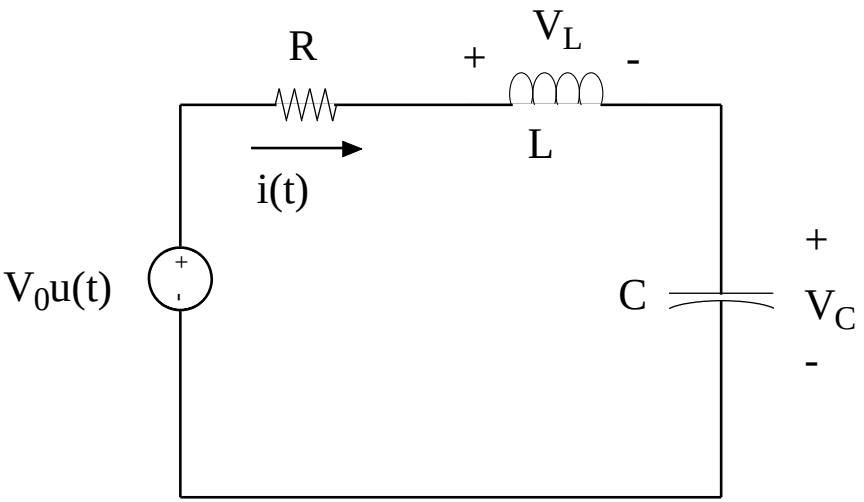

Step Response

Solve for L=1μH C=1μF
R=0.25Ω V_0=1V

Get V_{cn}, V_{cf}

Match Initial Conditions to
$V_c(t)=V_{cn}+V_{cf}$

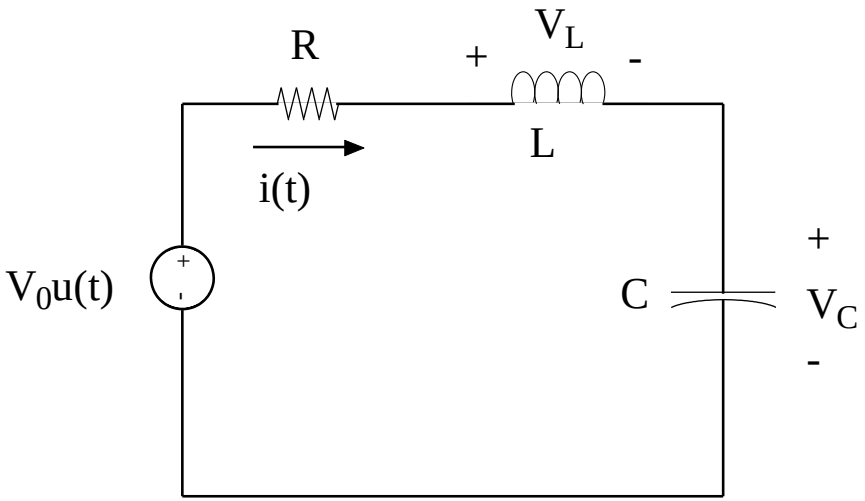

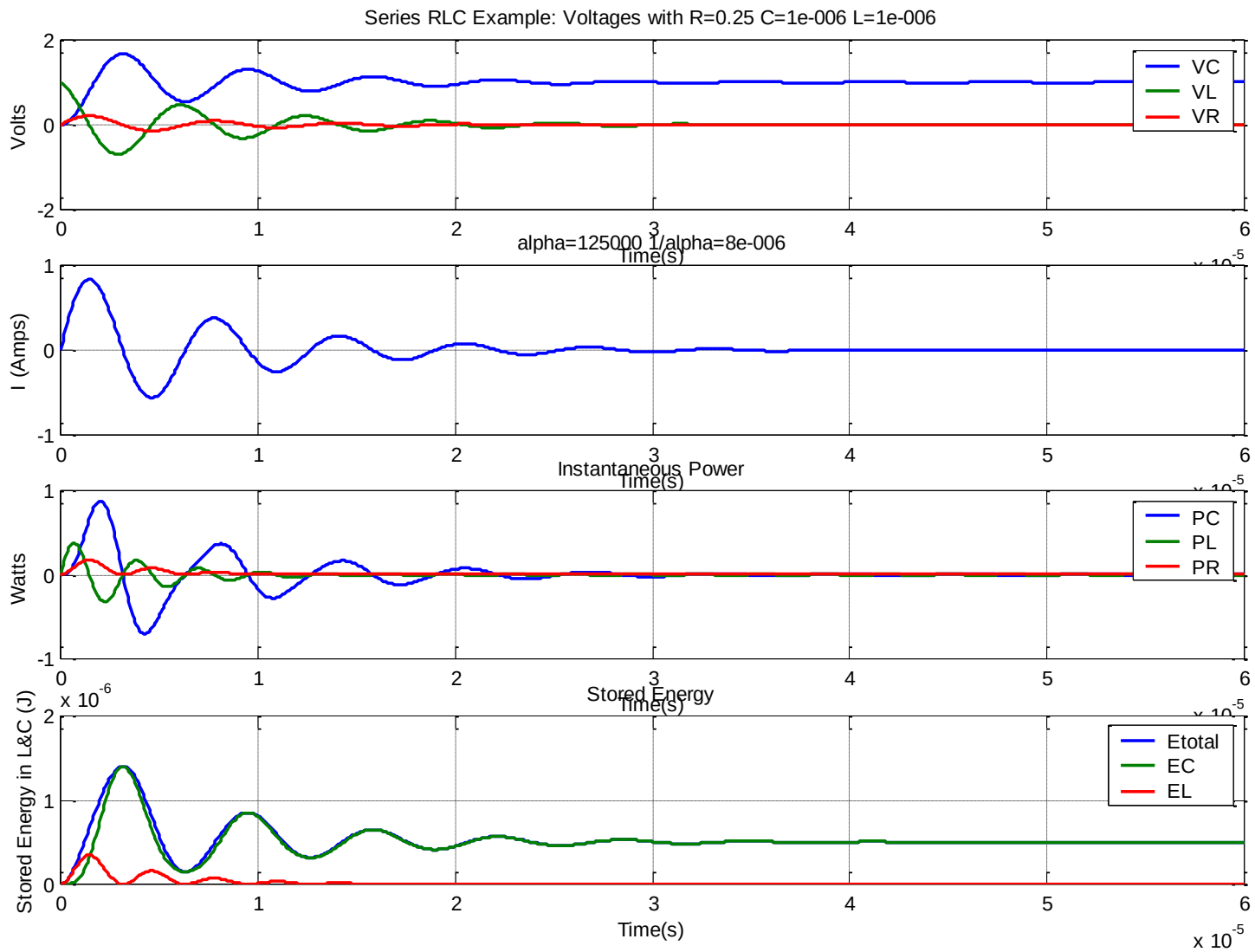
Series RLC Example: Voltages with R=0.25 C=1e-006 L=1e-006
Volts
VC
VL
VR
alpha=125000 1/alpha=8e-006
Time(s)
x 10^-5
I (Amps)
Instantaneous Power
Time(s)
x 10^-5
Watts
PC
PL
PR
Stored Energy
Time(s)
x 10^-5
x 10^-6
Stored Energy in L&C (J)
Etotal
EC
EL
Time(s)
x 10^-5

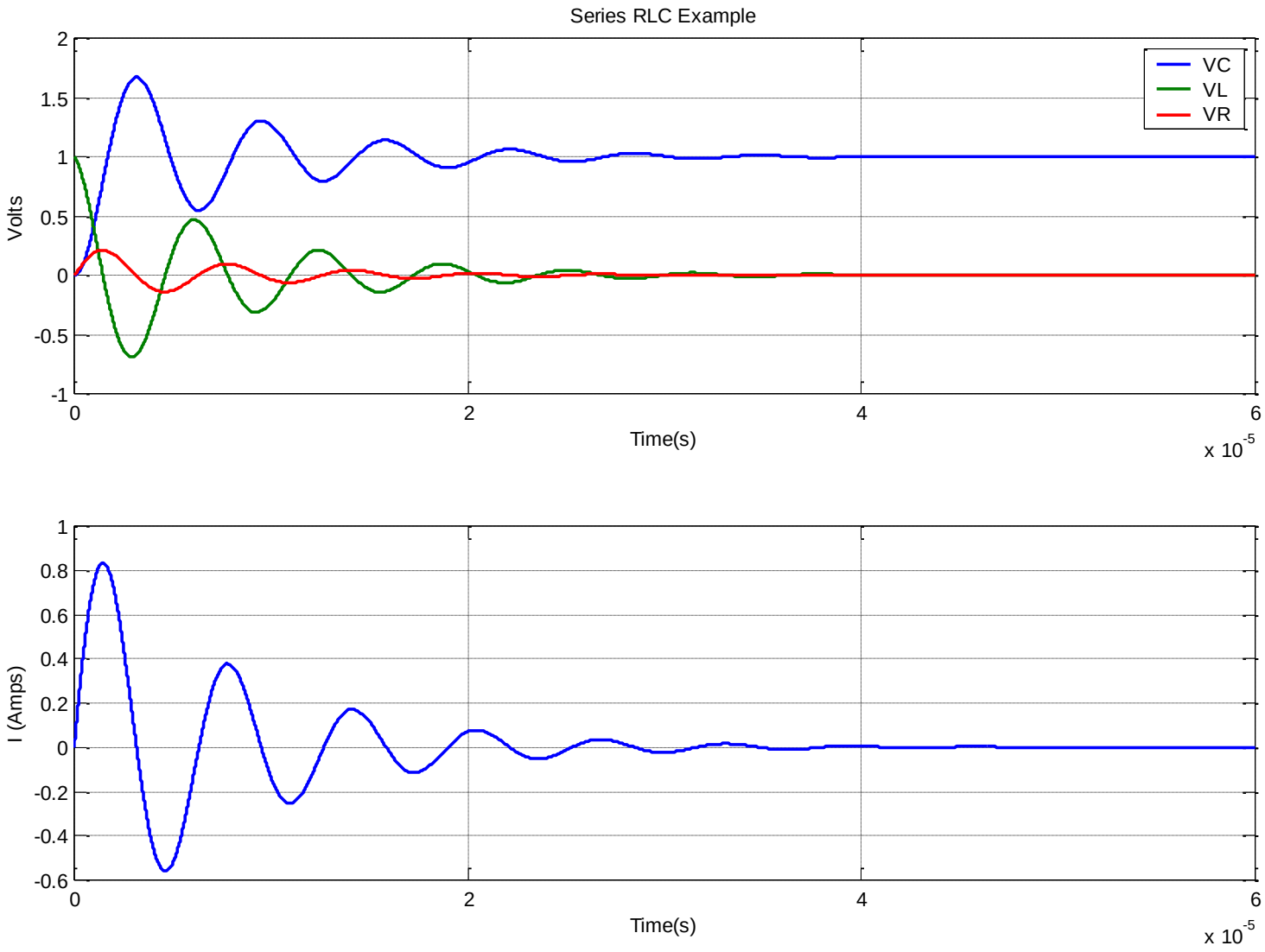
Series RLC Example
VC
VL
VR
Volts
2
1.5
1
0.5
0
-0.5
-1
0
2
4
6
Time(s)
x 10^-5
I (Amps)
1
0.8
0.6
0.4
0.2
0
-0.2
-0.4
-0.6
0
2
4
6
Time(s)
x 10^-5

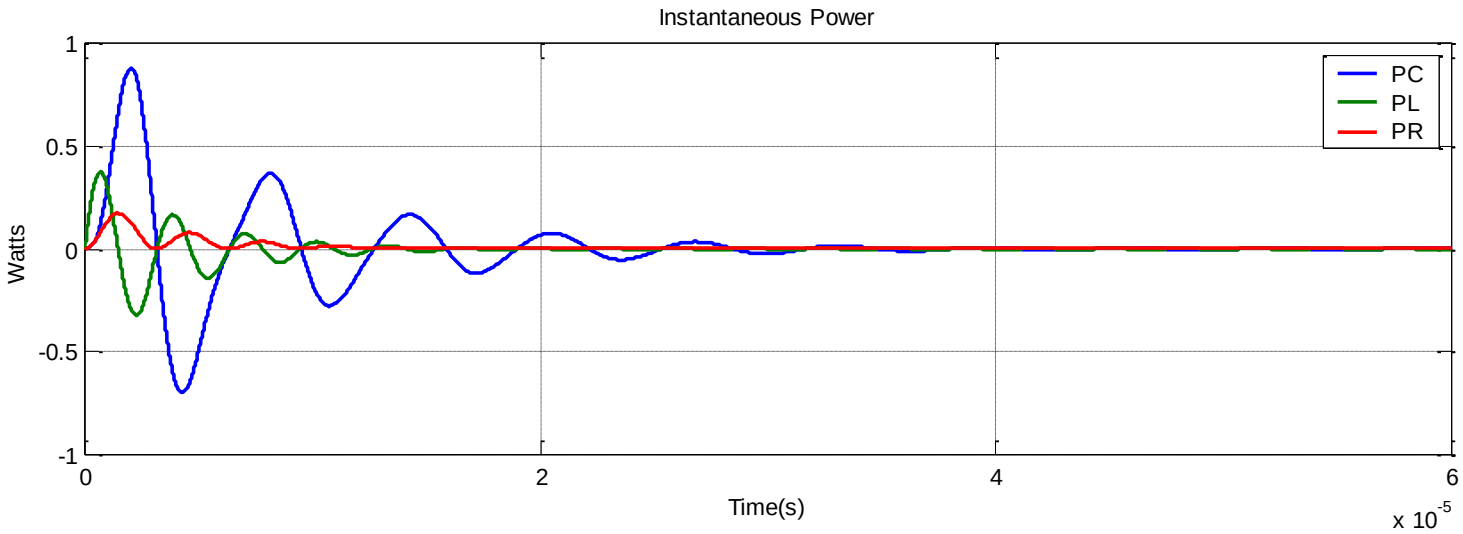
Instantaneous Power
Watts
Time(s)
x 10^-5
PC
PL
PR
1
0.5
0
-0.5
-1
0
2
4
6

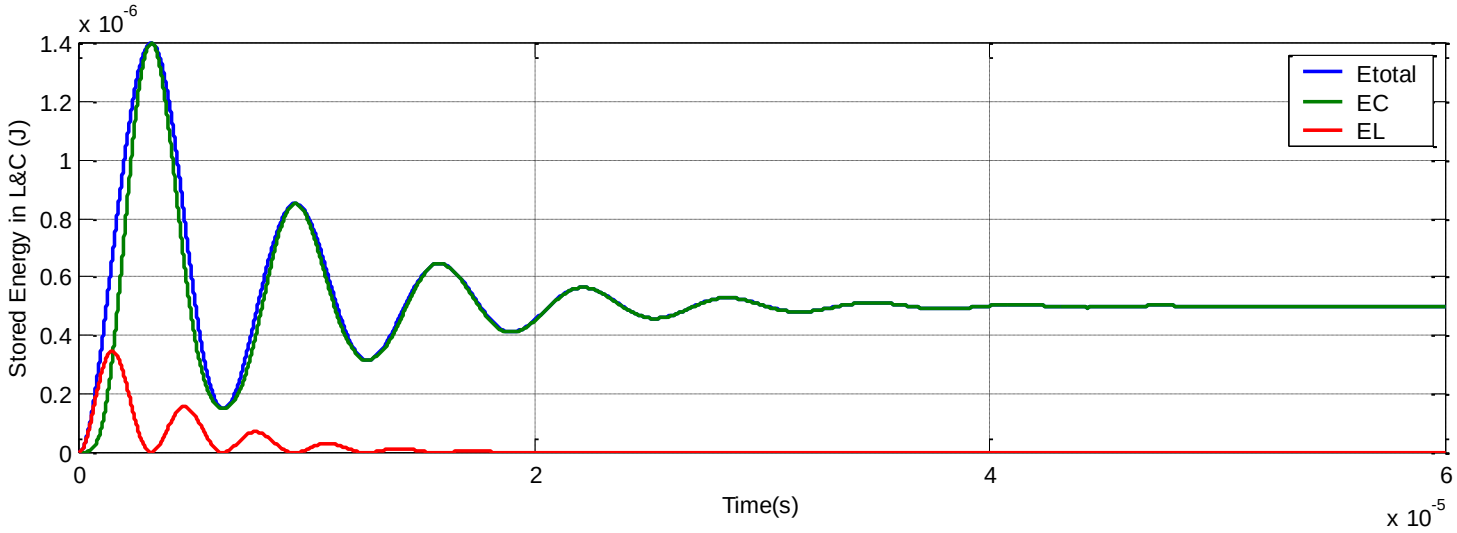
x 10^-6
Stored Energy in L&C (J)
Time(s)
x 10^-5
Etotal
EC
EL
1.4
1.2
1
0.8
0.6
0.4
0.2
0
0
2
4
6

Parallel RLC

- Find Governing Differential Eqn.
- Find Natural Response
- Find Forced Response
- Total soln=nat+forced
- Find Initial (Boundary) Conditions
- Match total solution to Initial Conditions

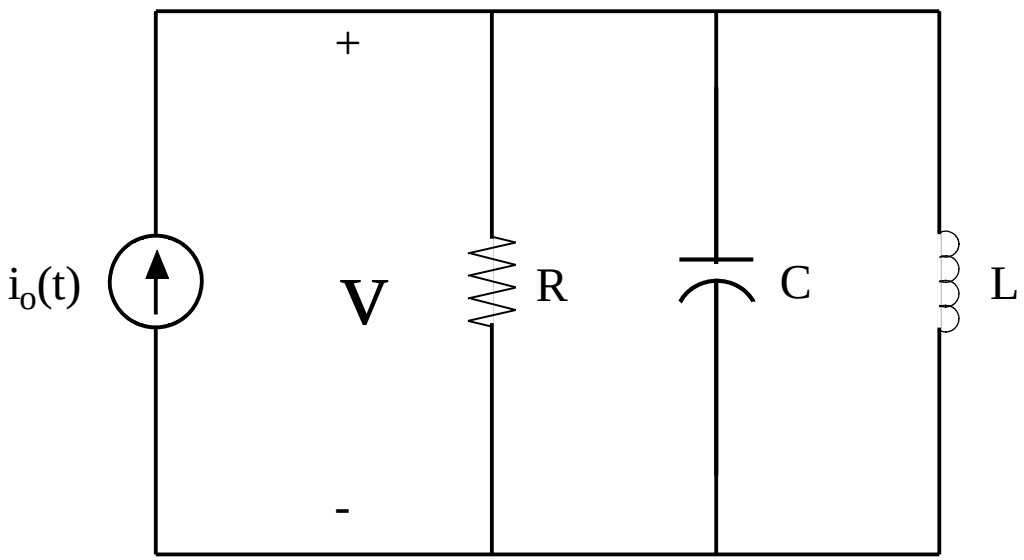

3 Numerical Cases

$i_0(t) = (1A)u(t) \quad L = 1\mu H \;\; C = 1\mu F$

$R_1 = 0.25\Omega$

$R_2 = 0.5\Omega$

$R_3 = 1\Omega$

Parallel RLC: Diff Eqn

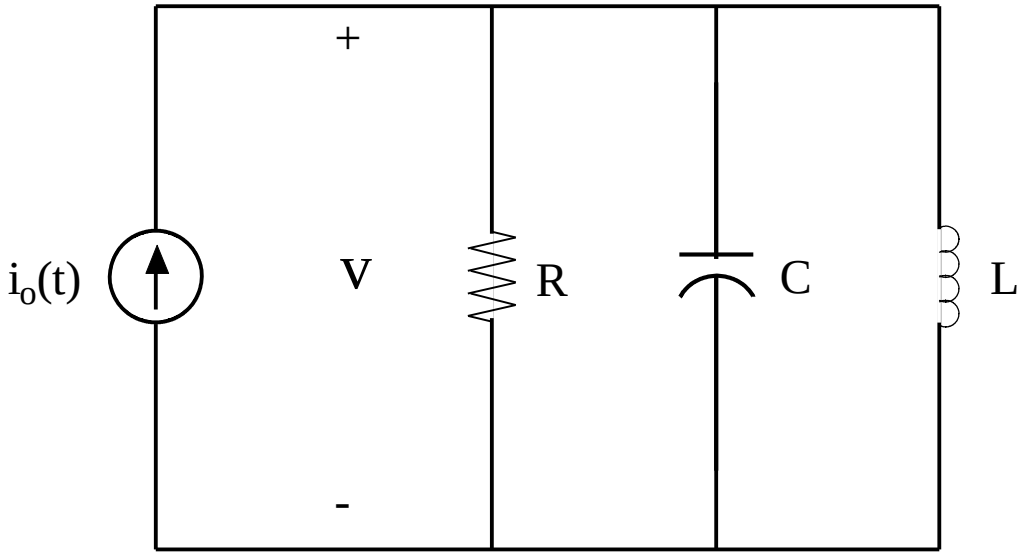

Parallel RLC: Natural Response

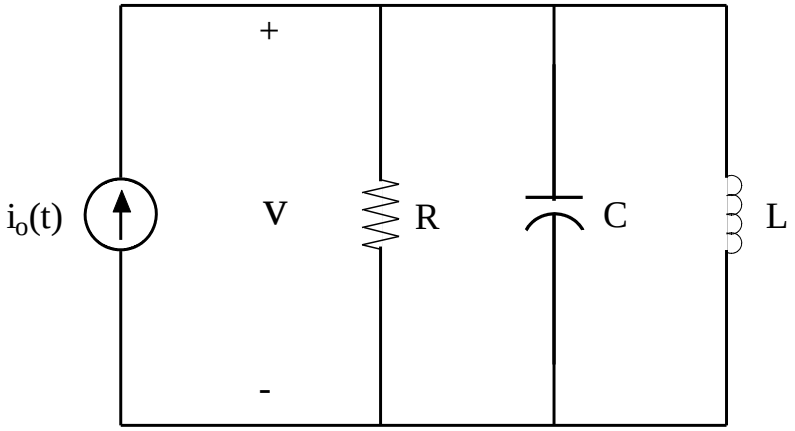

Parallel RLC: Forced Response (Step) +Complete Soln

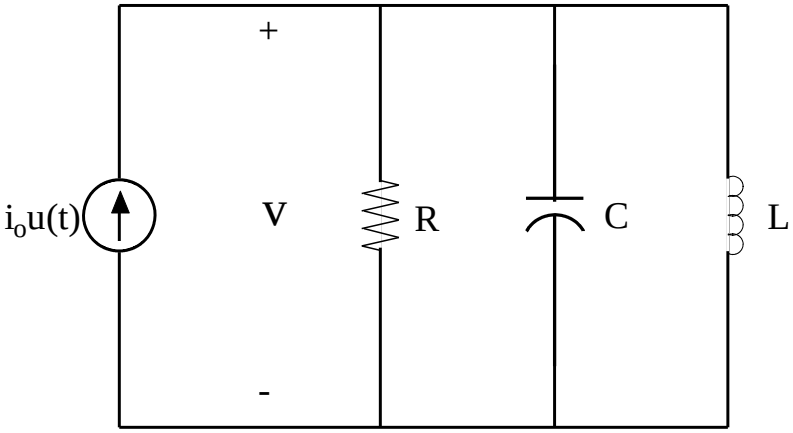

Result: Inductor Current Equation

$$\frac{\partial^2 i_L}{\partial t^2} + \underbrace{\left(\frac{1}{RC}\right)}_{\equiv 2\alpha}\frac{\partial i_L}{\partial t} + \underbrace{\left(\frac{1}{LC}\right)}_{\equiv \omega_0^2} i_L = \left(\frac{1}{LC}\right) i_0(t)$$

3 Numerical Cases

$i_0(t) = (1A)u(t) \quad L = 1\mu H \;\; C = 1\mu F$

$\omega_0 = 10^6 r/s$

$R_1 = 0.25\Omega \quad \alpha = 2x10^6 \;\; Overdamped \;\; s_1 = -\left(\sqrt{3}-1\right)x10^6 s^{-1},\; s_2 = -\left(\sqrt{3}+1\right)x10^6 s^{-1}$

$i_L(t) = 1A + A_1 e^{s_1 t} + A_2 e^{s_2 t}$

$R_2 = 0.5\Omega \quad \alpha = 1x10^6 \;\; Critically\ damped$

$i_L(t) = 1A + (A_1 + A_2 t)e^{-\alpha t}$

$R_3 = 1\Omega \quad \alpha = 5x10^5 \;\; Underdamped \;\; \omega_d = \sqrt{3}x10^6 s^{-1}$

$i_L(t) = 1A + \left[B_1 \cos(\omega_d t) + B_2 \sin(\omega_d t)\right]e^{-\alpha t}$

Result: Capacitor Voltage Equation

$$\frac{\partial^2 V_C}{\partial t^2} + \underbrace{\left(\frac{1}{RC}\right)}_{\equiv 2\alpha}\frac{\partial V_C}{\partial t} + \underbrace{\left(\frac{1}{LC}\right)}_{\equiv \omega_0^2} V_C = \left(\frac{1}{C}\right)\frac{\partial i_0(t)}{\partial t}$$

3 Numerical Cases

$i_0(t) = (1A)u(t) \quad L = 1\mu H \;\; C = 1\mu F$

$\omega_0 = 10^6 r/s$

$R_1 = 0.25\Omega \quad \alpha = 2x10^6 \;\; Overdamped \;\; s_1 = -\left(\sqrt{3}-1\right)x10^6 s^{-1},\; s_2 = -\left(\sqrt{3}+1\right)x10^6 s^{-1}$

$V_C(t) = A_1 e^{s_1 t} + A_2 e^{s_2 t}$

$R_2 = 0.5\Omega \quad \alpha = 1x10^6 \;\; Critically\ damped$

$V_C(t) = (A_1 + A_2 t)e^{-\alpha t}$

$R_3 = 1\Omega \quad \alpha = 5x10^5 \;\; Underdamped \;\; \omega_d = \sqrt{3}x10^6 s^{-1}$

$V_C(t) = \left[B_1 \cos(\omega_d t) + B_2 \sin(\omega_d t)\right]e^{-\alpha t}$

Parallel RLC: Match Initial Conditions

Parallel RLC: Match Initial Conditions

Parallel & Series Summary

$$General\ Form:$$

$$\frac{\partial^2 y}{\partial t^2} + 2\alpha \frac{\partial y}{\partial t} + \omega_0^2 y = f(t)$$

$$\alpha \equiv \begin{Bmatrix} \left(\frac{R}{2L}\right) Series \\ \left(\frac{1}{2RC}\right) Parallel \end{Bmatrix}$$

$$\omega_0^2 \equiv \left(\frac{1}{LC}\right) Series\ \&\ Parallel$$

$$s_{1,2} = -\alpha \pm \left[\alpha^2 - \omega_0^2\right]^{1/2} = -\alpha \pm j\omega_d$$

$$\omega_d = \left[\omega_0^2 - \alpha^2\right]^{1/2}$$

$$y = y_p(t) + y_n(t)$$

$$y_n(t) = \begin{Bmatrix} A_1 e^{s_1 t} + A_2 e^{s_2 t} & \alpha > \omega_0\ Overdamped \\ (A_1 + A_2 t)e^{-\alpha t} & \alpha = \omega_0\ Critically\ damped \\ \left[B_1 \cos(\omega_d t) + B_2 \sin(\omega_d t)\right] e^{-\alpha t} & \alpha < \omega_0\ Underdamped \end{Bmatrix}$$

GENERAL SECOND ORDER CIRCUITS

© Fred Terry
Fall, 2013

Outline

- What is a General SOC?
- Finding the Differential Equation for a General SOC
  - Time Domain
  - S-Domain/Laplace
- Time Domain Solution Once You Have the Differential Equation
- Finding and Matching Boundary Conditions

What is a "General" SOC?

- Neither Series Nor Parallel RLC Case
- Resulting Differential Equation Is Still of the Same General Form, But Coefficients May Be Significantly Different
- Lots of Real, Important Circuits Fall Into This Class
  - Transistor Amplifiers

$$\frac{\partial^2 i}{\partial t^2} + 2\alpha \frac{\partial i}{\partial t} + \omega_0^2 i = f(t)$$

$$\omega_0^2 \neq \left(\frac{1}{LC}\right)$$

$$\alpha \neq \left(\frac{R}{2L}\right) or \left(\frac{1}{2RC}\right)$$

Example: General 2-Cap (RCC) Circuit

- Objective:
  Find $v_{c2}(t)$

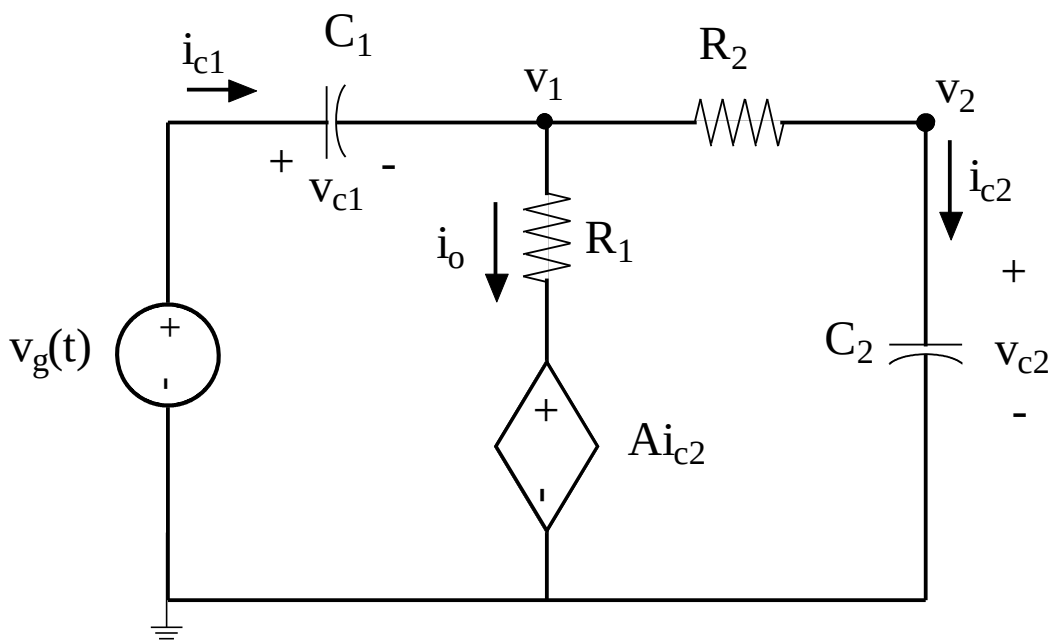

Time Domain Analysis

- Write KVL and KCL equations for Circuit
- Eliminate All Unknowns Except the variable of interest (ex. v_{c2}) using appropriate substitutions to get a differential equation
- Not Fundamentally Hard, but Hard to Systematically Codify

Time Domain Analysis

$$v_g = v_{c1} + i_{c2}R_2 + v_{c2}$$

KVL around circuit perimeter

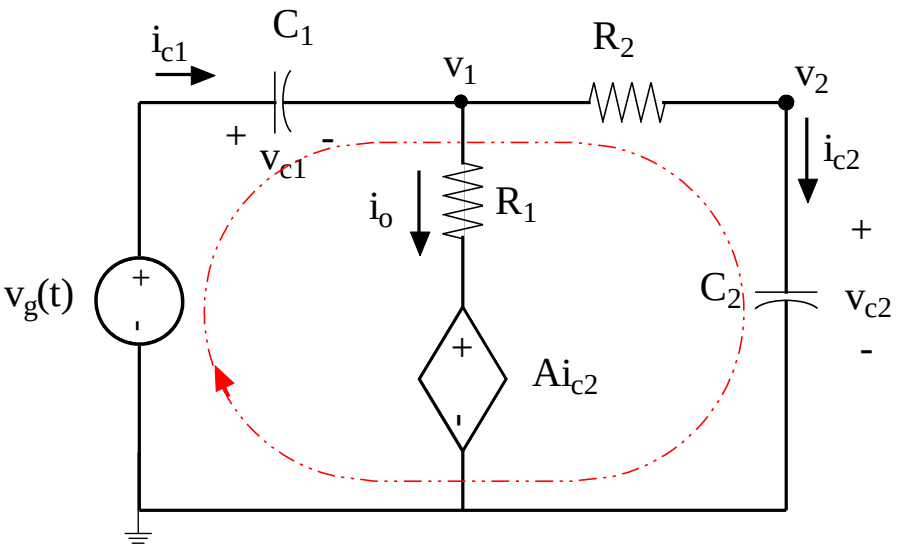

Time Domain Analysis

$$i_{c1} = i_o + i_{c2} \quad \text{KCL at node 1}$$

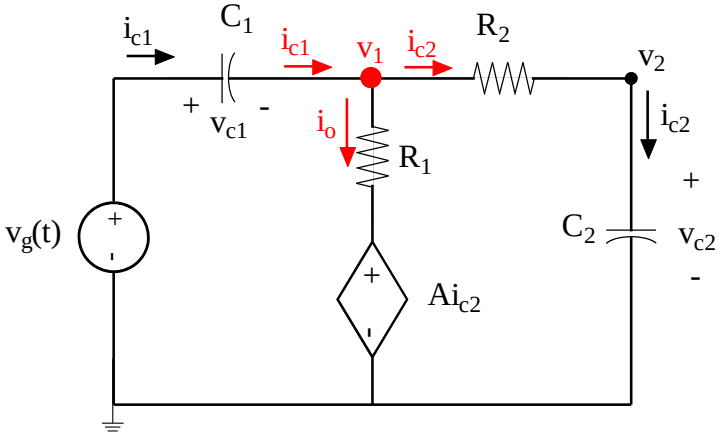

Time Domain Analysis

$$v_1 = i_0 R_1 + A i_{c2} = i_{c2} R_2 + v_{c2}$$

KVL around right loop

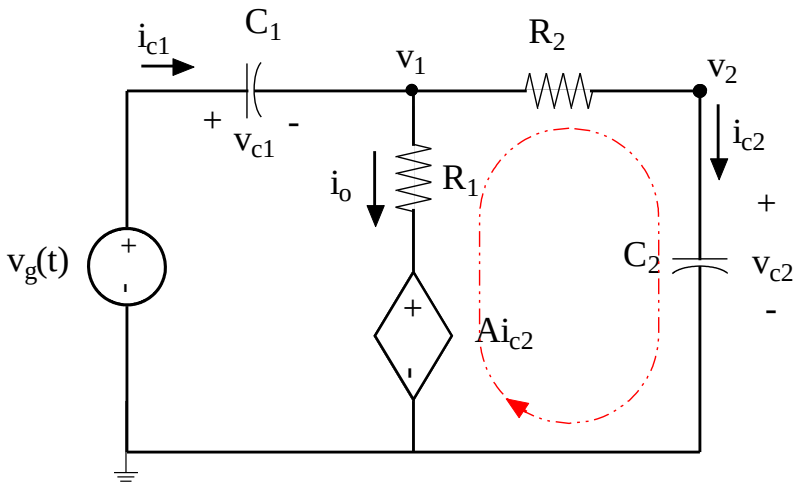

Time Domain Analysis

$v_g = v_{c1} + i_{c2}R_2 + v_{c2}$ KVL around circuit perimeter

$$\rightarrow v_{c1} = v_g - \left(i_{c2}R_2 + v_{c2}\right) = v_g - \left(R_2C_2\frac{dv_{c2}}{dt} + v_{c2}\right)$$

$i_{c1} = i_o + i_{c2}$ KCL at node 1

$$\rightarrow i_o = \left(i_{c1} - i_{c2}\right)$$

$i_0R_1 + Ai_{c2} = i_{c2}R_2 + v_{c2}$ KVL around right loop

$$\rightarrow \left(i_{c1} - i_{c2}\right)R_1 + Ai_{c2} = i_{c2}R_2 + v_{c2}$$

$$\rightarrow i_{c1}R_1 = i_{c2}\left(R_1 + R_2 - A\right) + v_{c2}$$

$$\rightarrow R_1C_1\frac{dv_{c1}}{dt} = \left(R_1 + R_2 - A\right)C_2\frac{dv_{c2}}{dt} + v_{c2}$$

$$\rightarrow R_1C_1\frac{d}{dt}\left[v_g - \left(R_2C_2\frac{dv_{c2}}{dt} + v_{c2}\right)\right] = \left(R_1 + R_2 - A\right)C_2\frac{dv_{c2}}{dt} + v_{c2}$$

Time Domain Analysis: Results

$$R_1C_1\frac{d}{dt}\left[v_g-\left(R_2C_2\frac{dv_{c2}}{dt}+v_{c2}\right)\right]=\left(R_1+R_2-A\right)C_2\frac{dv_{c2}}{dt}+v_{c2}$$

$$R_1C_1\frac{dv_g}{dt}-R_1R_2C_1C_2\frac{d^2v_{c2}}{dt^2}-C_1R_1\frac{dv_{c2}}{dt}=\left(R_1+R_2-A\right)C_2\frac{dv_{c2}}{dt}+v_{c2}$$

$$R_1C_1\frac{dv_g}{dt}=R_1R_2C_1C_2\frac{d^2v_{c2}}{dt^2}+\left[C_1R_1+\left(R_1+R_2-A\right)C_2\right]\frac{dv_{c2}}{dt}+v_{c2}$$

$$\frac{dv_g}{dt}=R_2C_2\frac{d^2v_{c2}}{dt^2}+\left[1+\frac{\left(R_1+R_2-A\right)C_2}{R_1C_1}\right]\frac{dv_{c2}}{dt}+\frac{v_{c2}}{R_1C_1}$$

$$\frac{d^2v_{c2}}{dt^2}+\left[\frac{1}{R_2C_2}+\frac{\left(R_1+R_2-A\right)C_2}{R_1R_2C_1C_2}\right]\frac{dv_{c2}}{dt}+\frac{v_{c2}}{R_1R_2C_1C_2}=\left(\frac{1}{R_2C_2}\right)\frac{dv_g}{dt}$$

$$\frac{d^2v_{c2}}{dt^2}+\underbrace{\left[\frac{1}{R_2C_2}+\frac{\left(R_1+R_2-A\right)}{R_1R_2C_1}\right]}_{2\alpha}\frac{dv_{c2}}{dt}+\underbrace{\left(\frac{1}{R_1R_2C_1C_2}\right)}_{\omega_o^2}v_{c2}=\left(\frac{1}{R_2C_2}\right)\frac{dv_g}{dt}$$

Initial Conditions: $V_{c2}(0^+)$, $i_{c2}(0^+)$

$$v_g(0^+), v_{c1}(0^+), v_{c2}(0^+) \text{ Known}$$

$$v_1(0^+) = v_g(0^+) - v_{c1}(0^+) \quad \text{KVL}$$

$$v_2(0^+) = v_{c2}(0^+) \quad \text{KVL}$$

$$i_{c2}(0^+) = C_2 \left.\frac{dv_{c2}}{dt}\right|_{0^+} = \frac{v_1(0^+) - v_{c2}(0^+)}{R_2}$$

$$= \frac{v_g(0^+) - v_{c1}(0^+) - v_{c2}(0^+)}{R_2}$$

$$i_0(0^+) = \frac{v_1(0^+) - Ai_{c2}(0^+)}{R_1}$$

$$= \frac{v_g(0^+) - v_{c1}(0^+) - Ai_{c2}(0^+)}{R_1}$$

$$i_{c1}(0^+) = C_1 \left.\frac{dv_{c1}}{dt}\right|_{0^+}$$

$$= i_{c2}(0^+) + i_o(0^+)$$

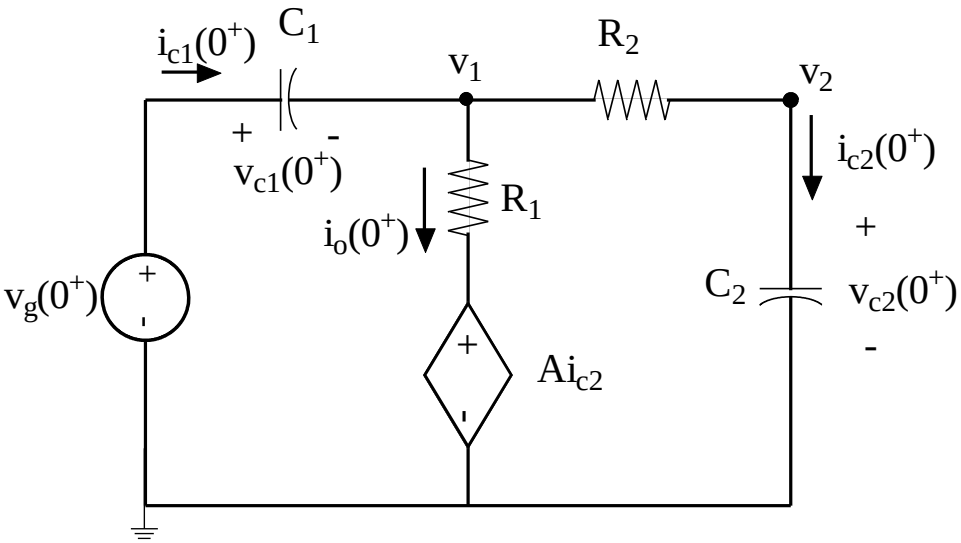

Circuit at $t=0_+$

SUPPLEMENTAL NOTES:A GENERAL APPROACH TO RELATING INITIAL CONDITION INFORMATION IN SOC'S AND HIGHER ORDER CIRCUITS

© Fred Terry
Fall, 2013

Relating Initial Conditions

- For SOC problems, if we can find $V_c(0^+)$ and $i_c(0^+)$ {for $V_c(t)$ problems} or $i_L(0^+)$ and $V_L(0^+)$ {for $i_L(t)$ problems} then we are in great shape
- Usually, we have $V_c(0^+)$ & $i_L(0^+)$ {for RLC problems, for SOC's with 2 C's or 2 L's we will have an analogous situation}
- To get the quantity we want, we only have to do DC-style circuit analysis at $t= 0^+$

Example

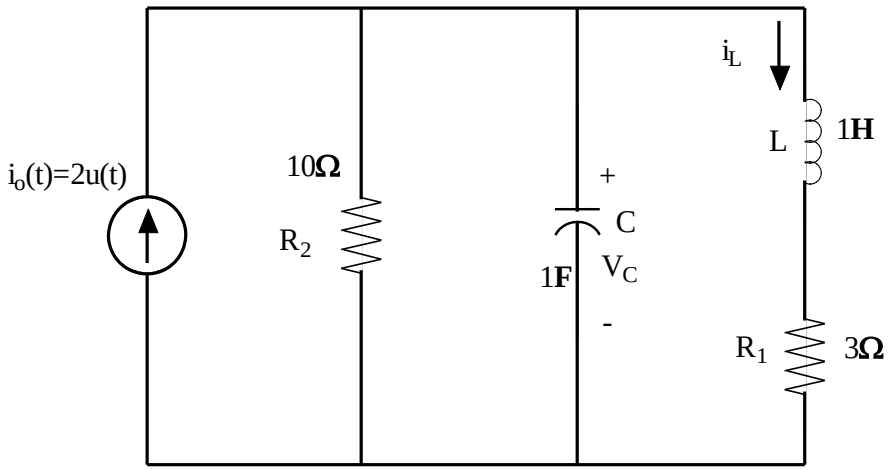

Suppose we have the initial (boundary) conditions:

$$i_L(0^+) = i_L(0^-) = 5A$$

$$V_c(0^+) = V_c(0^-) = 1V$$

How do we get $i_c(0^+)$ and/or $V_L(0^+)$?

Draw $t=0^+$ Circuit

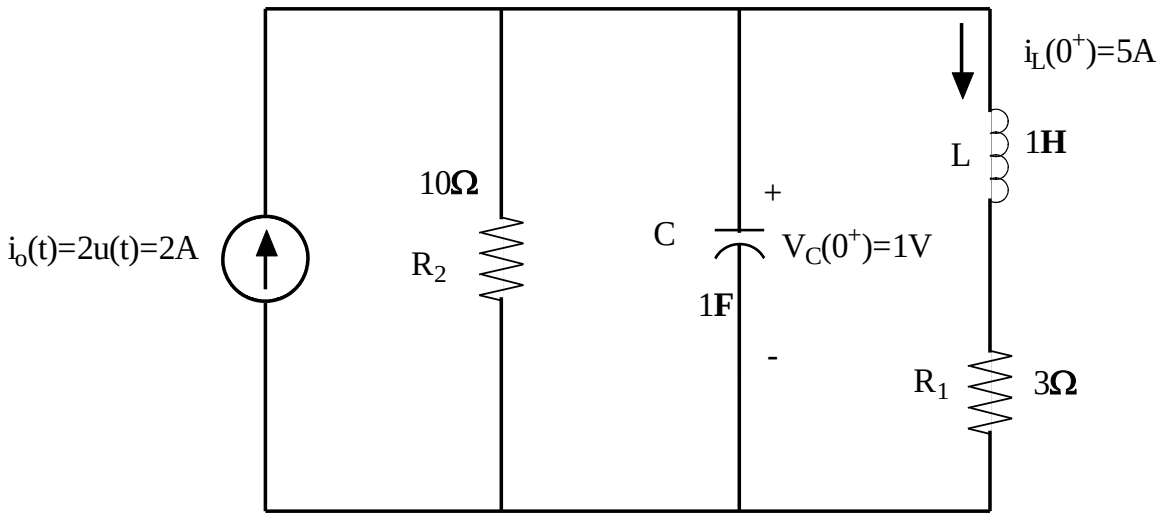

- $V_c(0^+)$ fixed but $i_c(0^+)$ can be anything (as required by the circuit)
- $i_L(0^+)$ is fixed but $V_L(0^+)$ can be anything (as required by the circuit)

Draw $t=0^+$ Circuit

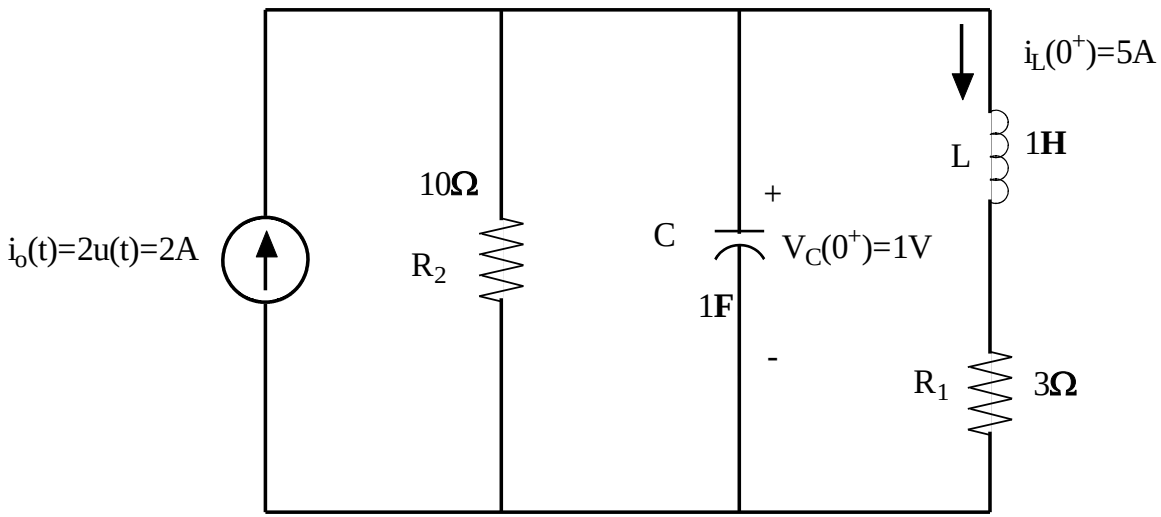

- $V_c(0^+)$ fixed but $i_c(0^+)$ can be anything (as required by the circuit)→Replace C by V-source in $t=0^+$ circuit model
- $i_L(0^+)$ is fixed but $V_L(0^+)$ can be anything (as required by the circuit) →Replace L by I-source in $t=0^+$ circuit model
- REPLACEMENT ONLY WORKS FOR $t=0^+$!!!!!

Draw $t=0^+$ Circuit

Now Do Nodal, Mesh, or KVL/KCL to find the missing stuff $i_c(0^+)$,$V_L(0+)$

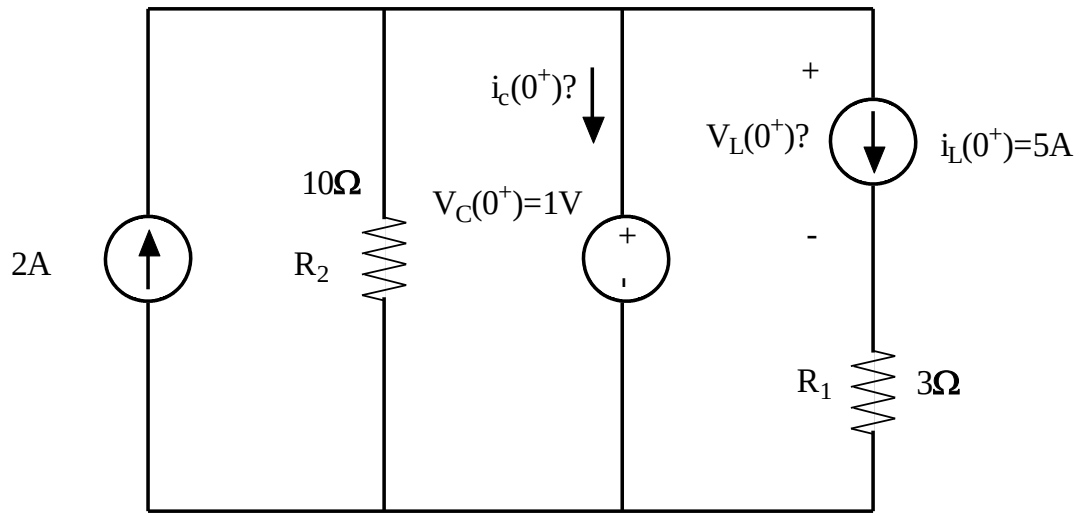
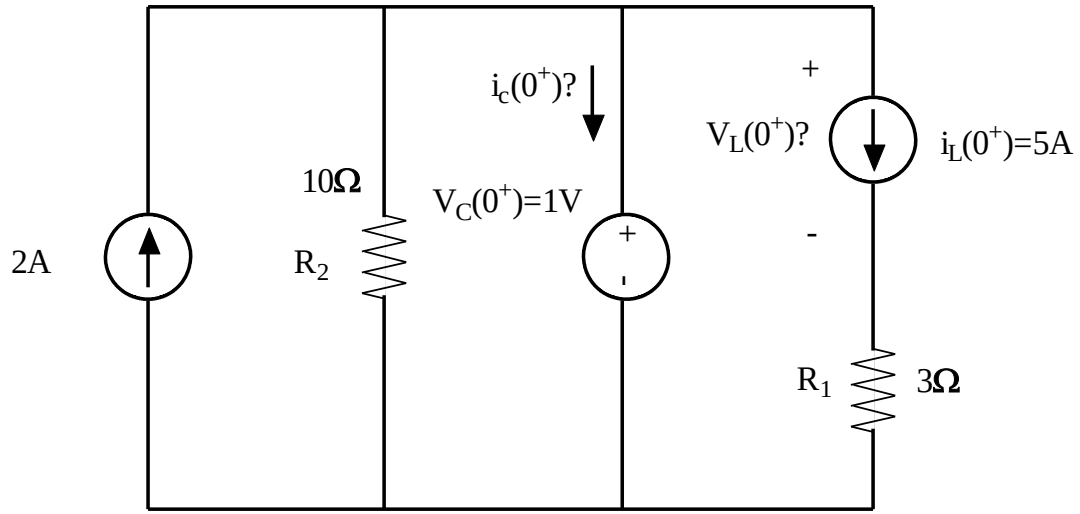
$t=0^+$ Nodal Analysis