CIRCUIT TERMINOLOGY

Credits to J. Phillips, F. Ulaby

EECS 215: Intro. Circuits (F. Terry FA13)

Basic Concepts

- Charge: Fundamental property of some particles (notably but not exclusively electrons, protons)
- Separating positive and negative charges in space→Electric Fields → Voltage Differences/Drops
- Moving Charges → Electric Currents
- Time Varying Electric Fields/Current → Electromagnetic Waves (radiation)

Units and Dimensions

- Need to agree on standard units!
- International system of units (SI)

Quantity	Unit	Symbol
Charge	coulomb	C
Electric Potential	volt	V
Electric Current	ampere	A
Resistance	ohms	Ω
Capacitance	farad	F
Inductance	henry	H
Frequency	hertz	Hz
Power	watts	W

Multiplier	Prefix	Symbol
10^{15}	peta	P
10^{12}	tera	T
10^{9}	giga	G
10^{6}	mega	M
10^{3}	kilo	k
10^{-3}	milli	m
10^{-6}	micro	μ
10^{-9}	nano	n
10^{-12}	pico	p
10^{-15}	femto	f

Units, Multiples, Notation

Table 1-1: Fundamental SI units.

Dimension	Unit	Symbol
Length	meter	m
Mass	kilogram	kg
Time	second	s
Electric Current	ampere	A
Temperature	kelvin	K
Amount of substance	mole	mol

Table 1-2: Multiple and submultiple prefixes.

Prefix	Symbol	Magnitude
exa	E	10^{18}
peta	P	10^{15}
tera	T	10^{12}
giga	G	10^{9}
mega	M	10^{6}
kilo	k	10^{3}
milli	m	10^{-3}
micro	μ	10^{-6}
nano	n	10^{-9}
pico	p	10^{-12}
femto	f	10^{-15}
atto	a	10^{-18}

As a general rule, we shall use:

- A lowercase letter, such as i for current, to represent the general case:

  i *may or may not be time varying*

- A lowercase letter followed with (t) to emphasize time:

  $i(t)$ *is a time-varying quantity*

- An uppercase letter if the quantity is not time varying; thus:

  I *is of constant value (dc quantity)*

- A letter printed in boldface to denote that:

  $\mathbf{I}$ *has a specific meaning, such as a vector, a matrix, the phasor counterpart of* $i(t)$*, or the Laplace or Fourier transform of* $i(t)$

Tech Brief 1: Micro- and Nanotechnology

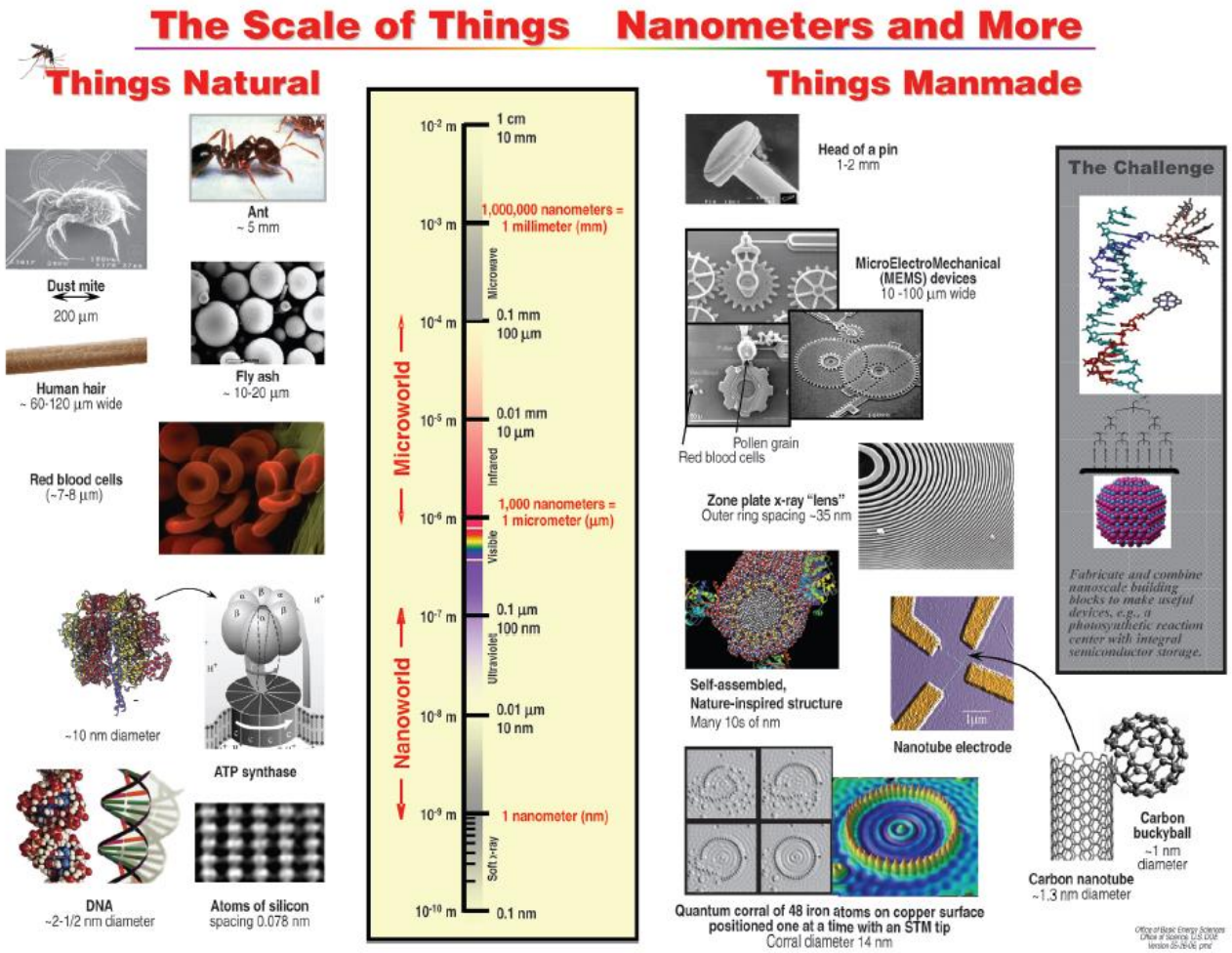

Figure TF1-1: The scale of natural and man-made objects, sized from nanometers to centimeters. (Courtesy of U.S. Department of Energy.)

Tech Brief 1: Micro- and Nanotechnology

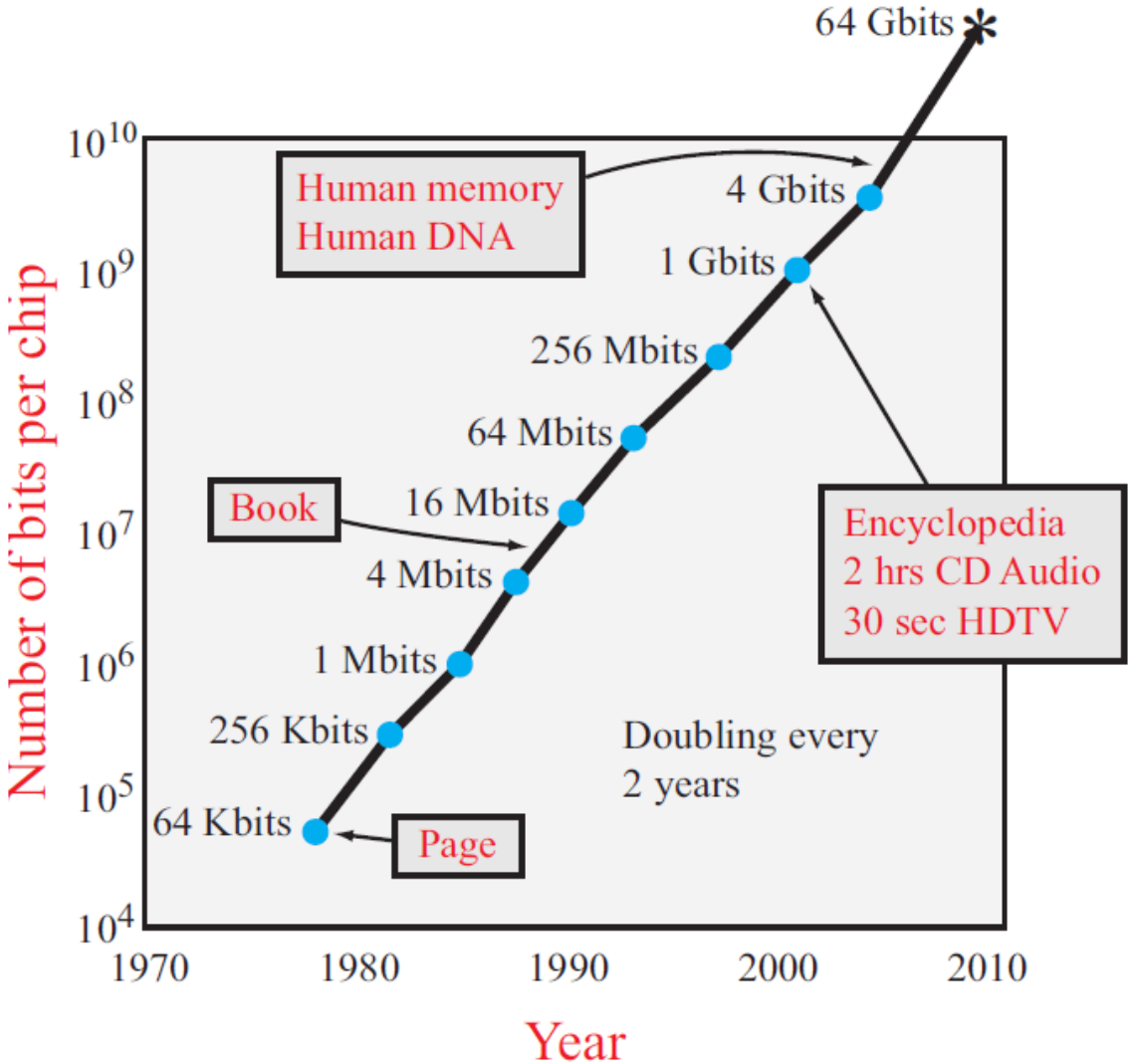

Tech Brief 1: Micro- and Nanotechnology

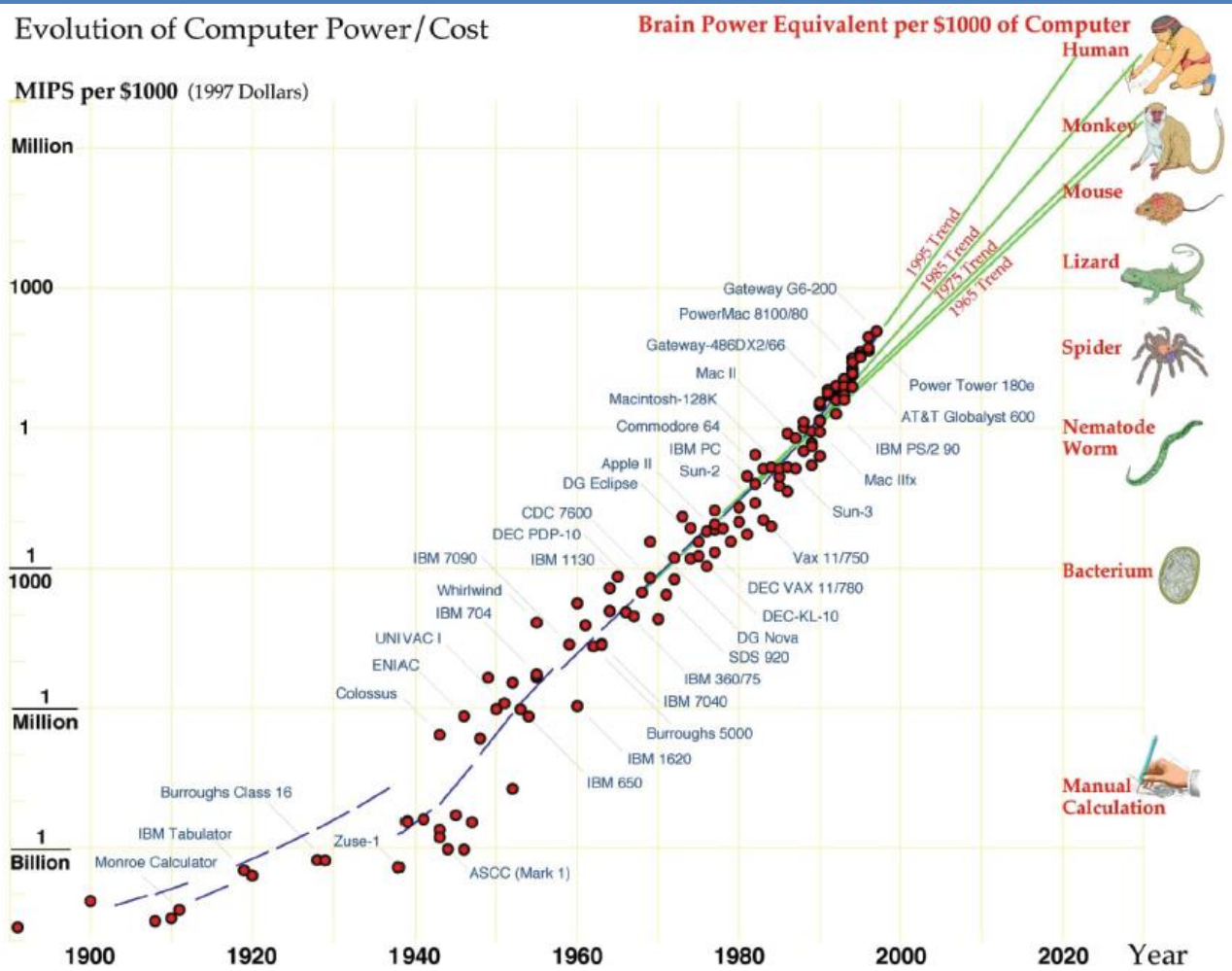

Figure TF1-3: Time plot of computer processing power in MIPS per $1000. (From "When will computer hardware match the human brain?" by Hans Moravec, *Journal of Transhumanism*, Vol. 1, 1998.)

Basic Concepts: Units

- All EE Circuit Work uses Volts, Amperes (Amps), Coulombs, Ohms, Farads, Henrys, Webers, seconds, etc. from the MKS units system (*Système International d'Unités* or SI units)
- *Ulaby & Maharbiz*, while excellent in many respects, you will not find many explicit examples of the USE of Units as a Check. <u>This is dangerous</u>. In lectures and homework solutions, we will try to illustrate good practices. *Adding, subtracting, or equating physical results which have different units will be treated as <u>major error</u> on all assignments.*

Charge: Electrical property of particles

Units: coulomb

One coulomb: amount of charge accumulated in one second by a current of one ampere.

1 coulomb represents the charge on ~ 6.241×10^{18} electrons

The coulomb is named for a French physicist, Charles-Augustin de Coulomb (1736-1806), who was the first to measure accurately the forces exerted between electric charges.

Charge on an electron

$e = 1.602 \times 10^{-19}$ C

Charge conservation

Cannot create or destroy charge, only transfer

Current

- Flow of positive charge
- Charge carriers are typically electrons (-)
- Current flow is opposite electron flow

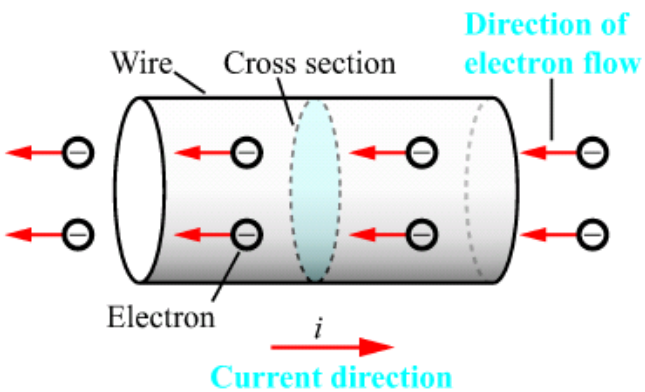

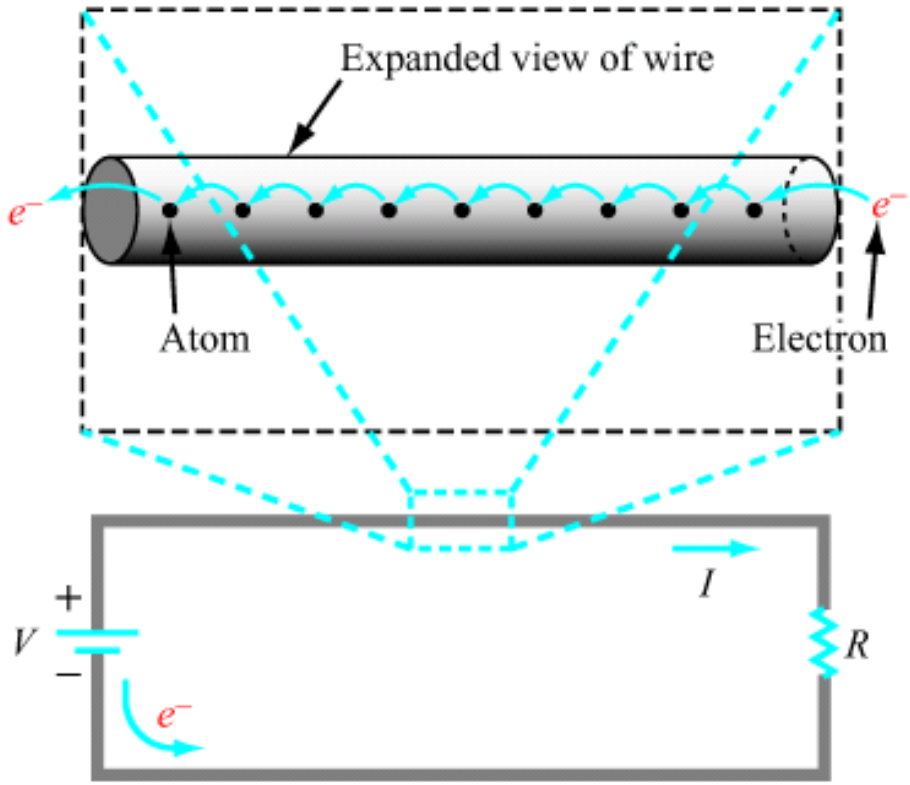

Units: ampere

The other electrical units are all defined in terms of the ampere (1 A = 1 C/s, 1 A = 1 W/V)

Current

- Usually (though not always) carried by electrons with charge –q
- Current is <u>total charge</u> flowing past a <u>point</u> (node) per second
- For the example below, let
  - n=electron density in wire (electrons/m^3)
  - v=electron velocity (m/s)
  - I=current in amperes
  - A=wire cross-sectional Area in m^2

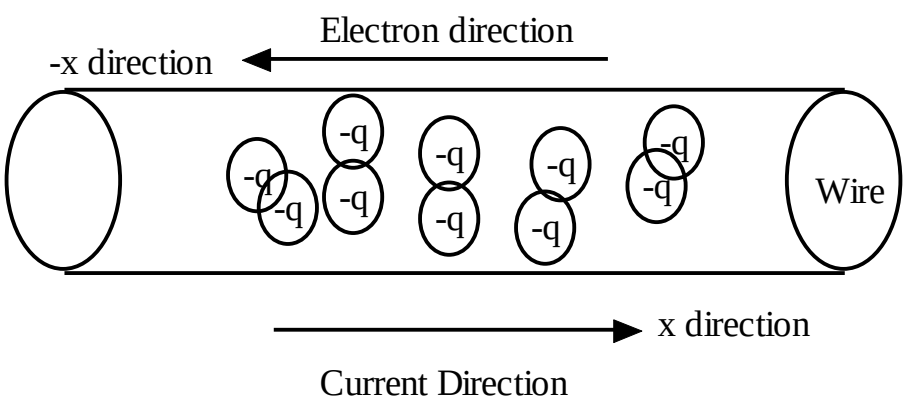

$$
\begin{aligned}
I &= -qnvA \\
&= -(C)*(m^{-3})*(-m/s)*(m^2) \\
&= +C/s \\
&= +Amps
\end{aligned}
$$

Current: Sign Convention

- The Direction DEFINED for a Value of Current determines its SIGN
- Choose reference direction for current flow
- We Often Do Not Know The SIGN of the Current Until We Have Solved the Circuit Problem
- Below: $I_1 = -I_2$
- Do not know the direction of current flow, + or -
- Working with either I_1 or I_2 as a consistent variable will get us the right answer, sign determined by reference direction

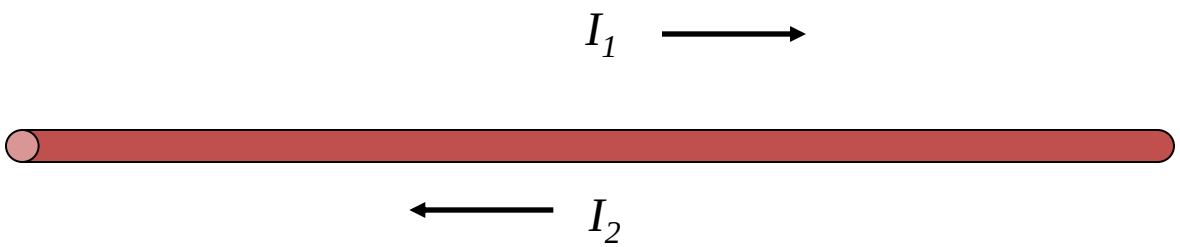

Electric Potential

Voltage, potential difference *between 2 points*

Energy required to move charge through an element

Work done = Force x distance = Charge x Potential

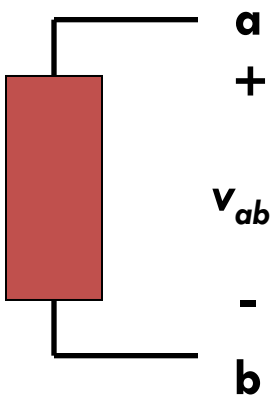

$v_{ab} = -v_{ba}$

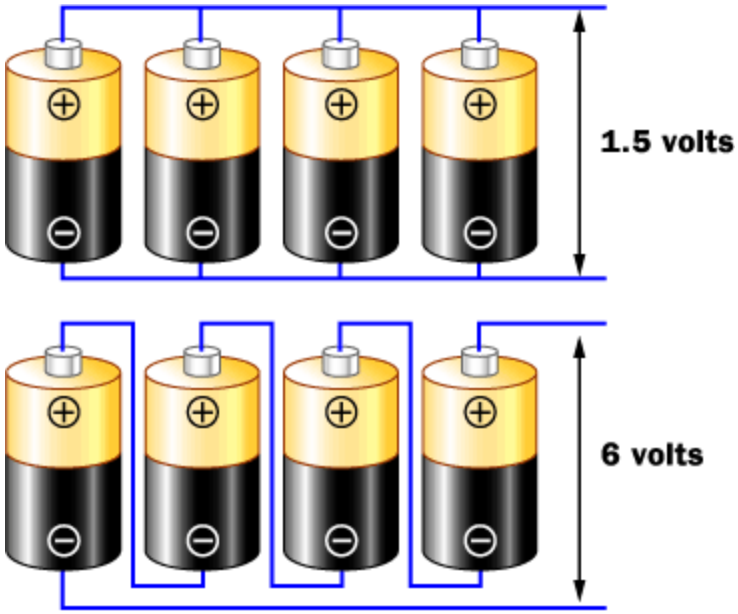

©2001 HowStuffWorks

Units: Volts

Volts

- Potential Difference BETWEEN 2 Points
- Voltages are POTENTIAL DIFFERENCES & <u>Are Basically A Measure of Potential Energy</u>
- ***Only Has Meaning as Measured between 2 points (2 nodes in a circuit)***
- *Voltage Does Not Flow, Current Flows*
- Formal: Line Integral of E-field between points a&b

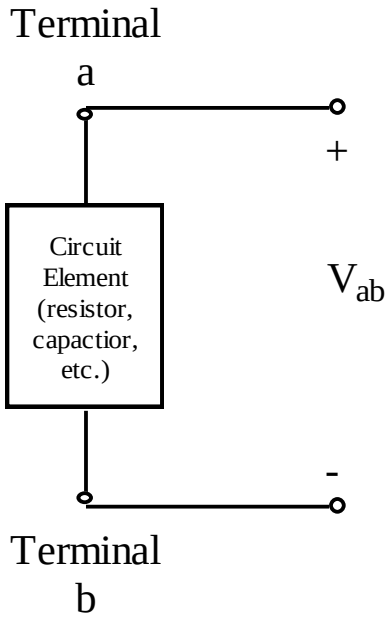

$$V_{ab} = -\int_a^b \vec{E}(\vec{r}) \bullet d\vec{\ell} = V_a - V_b$$

Voltage: Sign Reference

- Signs Depend on ARBRITRARY Choice of which terminal is "+" and which is "-"
- All 3 Pictures (and 4 cases) below have the SAME PHYSICAL MEANING

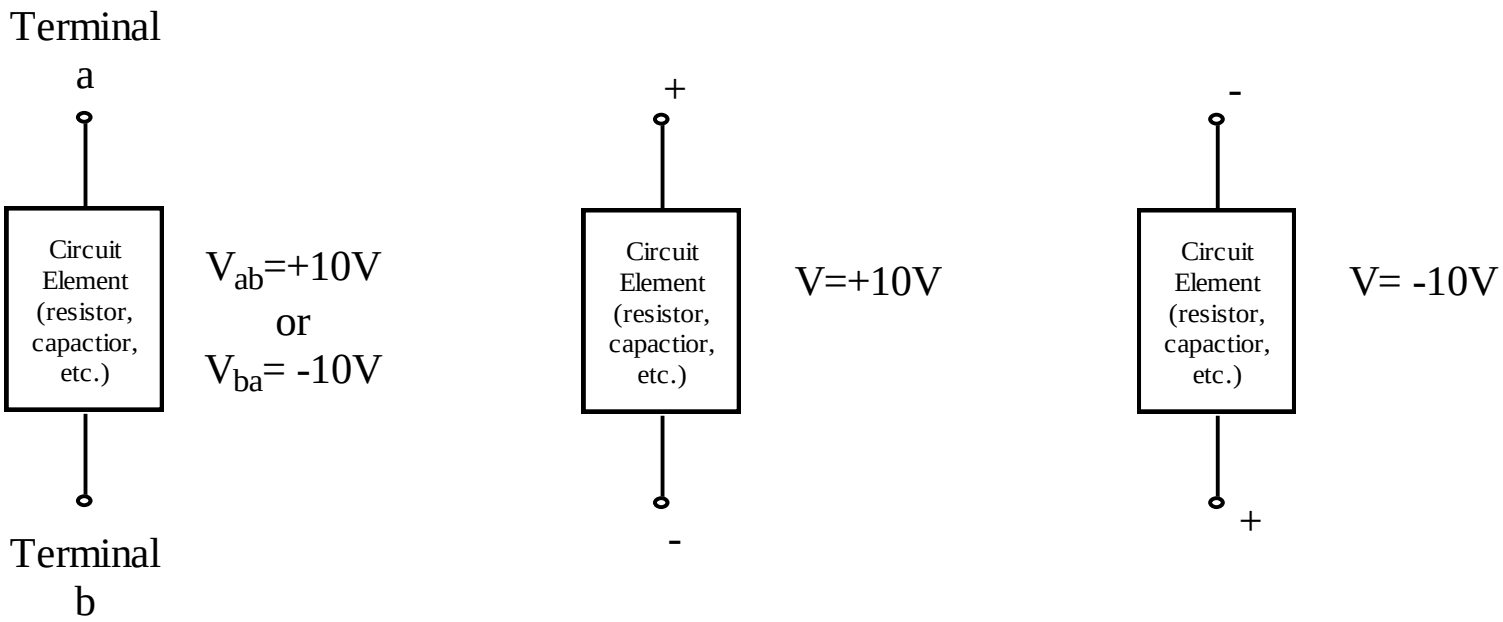

Reference/Ground

- Choose reference point for potential
- Assign potential at reference = 0, called ground
- Now all potentials are relative to ground terminal

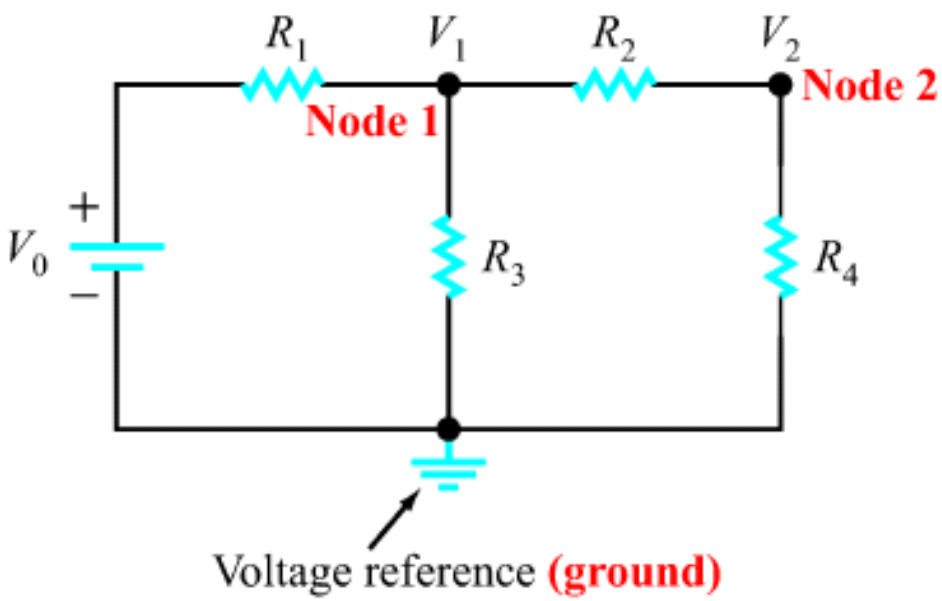

Measuring Voltage/Current

- Voltmeter: measures voltage without drawing current
- Ammeter: measures current without dropping voltage

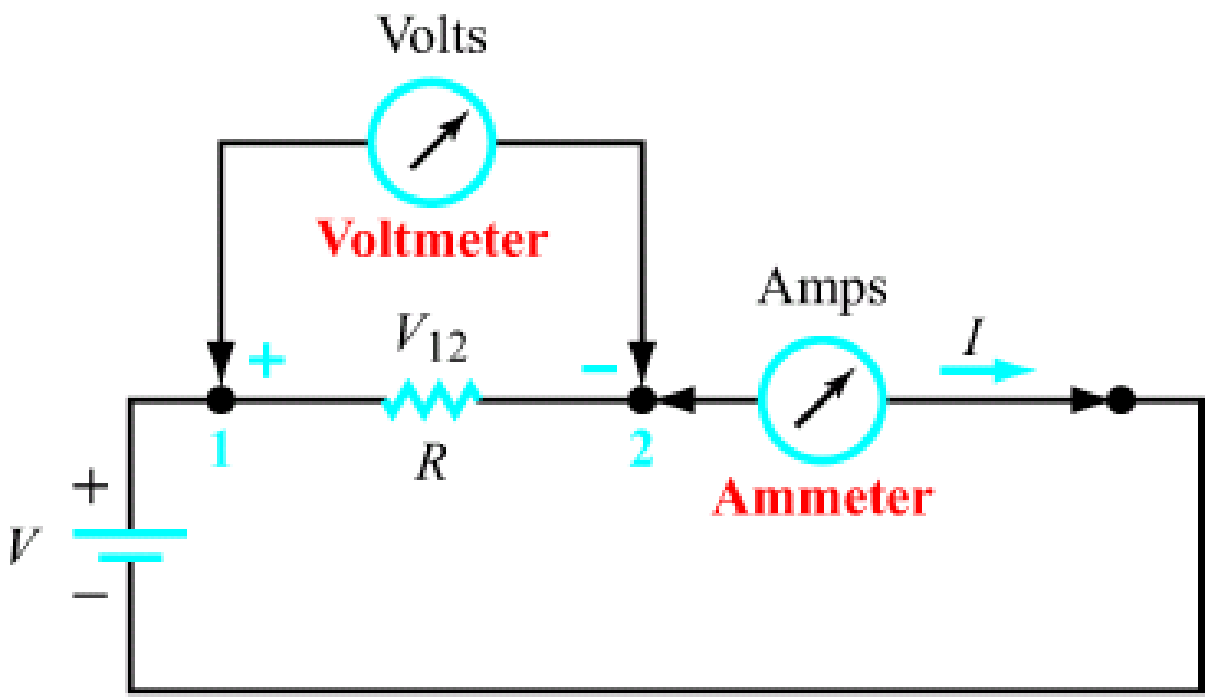

Open Circuit / Short Circuit

- Open circuit: no path for current flow (R=∞)
- Short circuit: no voltage drop (R=0)

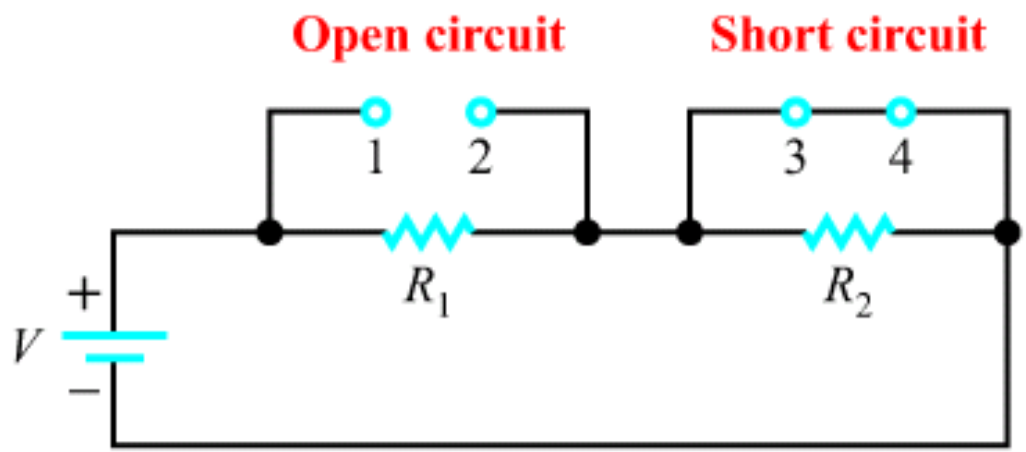

Circuit Elements: Independent Sources

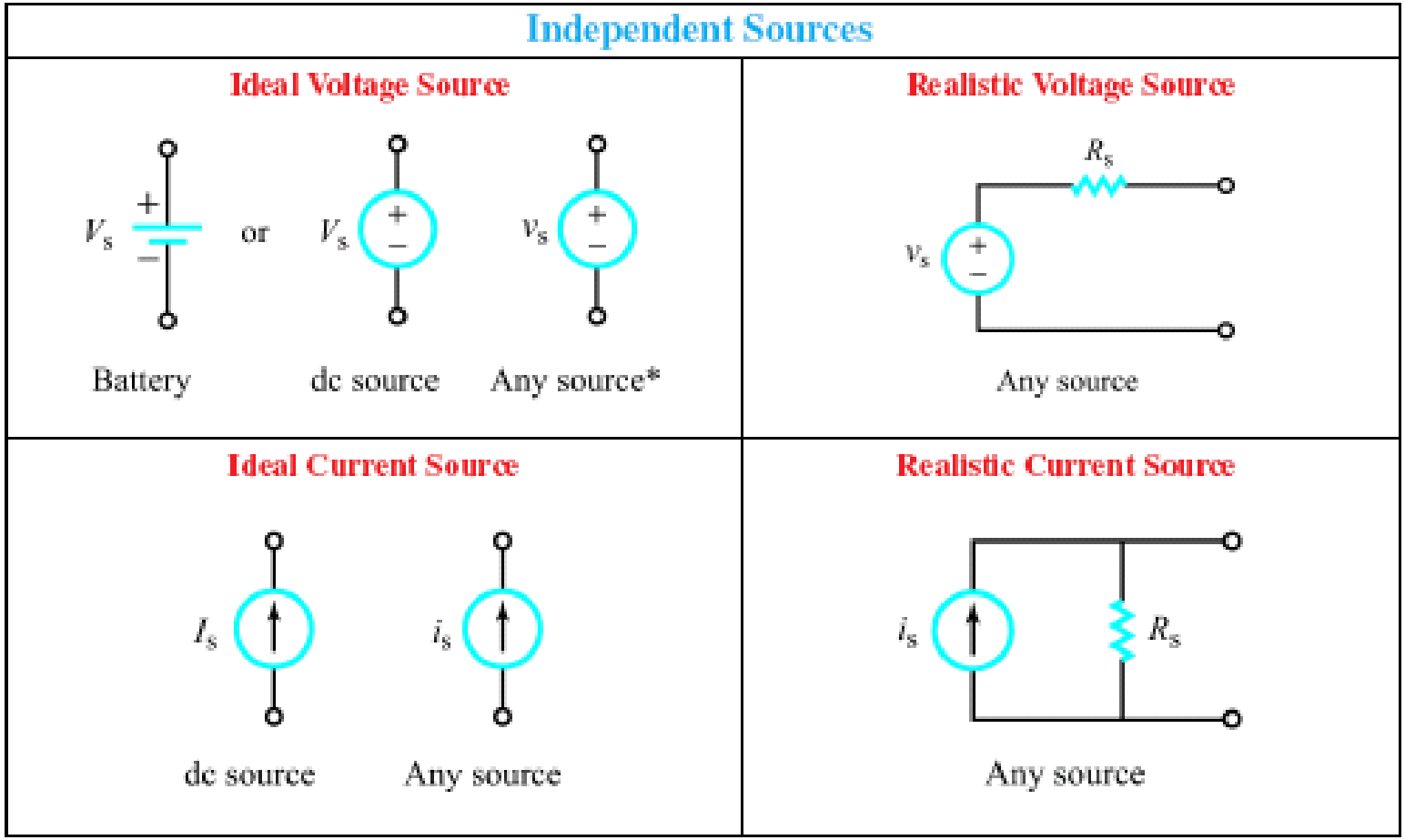

Circuit Elements: Linear Dependent Sources

Dependent Sources	
Voltage-Controlled Voltage Source (VCVS) 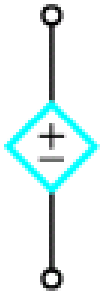 $v_s = \alpha v_x$	**Voltage-Controlled Current Source (VCCS)** $i_s = g v_x$
Current-Controlled Voltage Source (CCVS) $v_s = r i_x$	**Current-Controlled Current Source (CCCS)** $i_s = \beta i_x$

Note: α, g, r, and β are constants; v_x and i_x are a specific voltage and a specific current elsewhere in the circuit. *Lower-case v and i represent voltage and current sources that may or may not be time varying, whereas upper-case letters (V and I) denote dc sources.

I-V for Sources

- Current/voltage fixed for independent sources
  - What does non-ideal source look like?
- Dependent sources vary with reference voltage/current
  - What are units for slope?

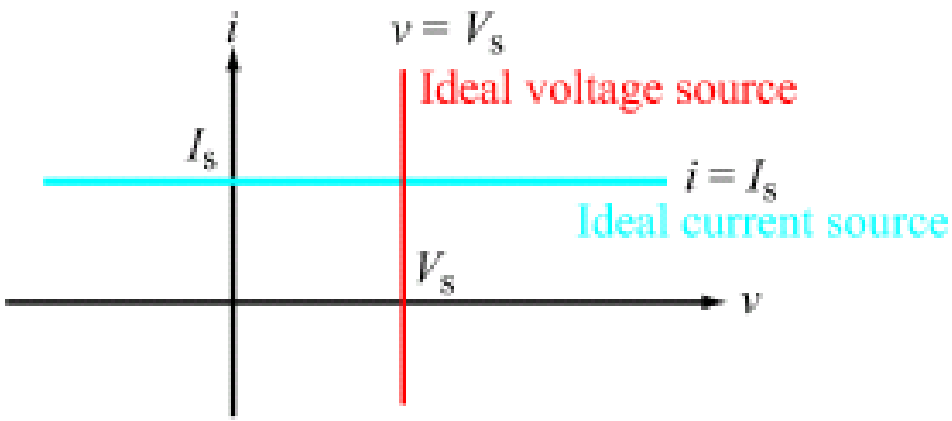

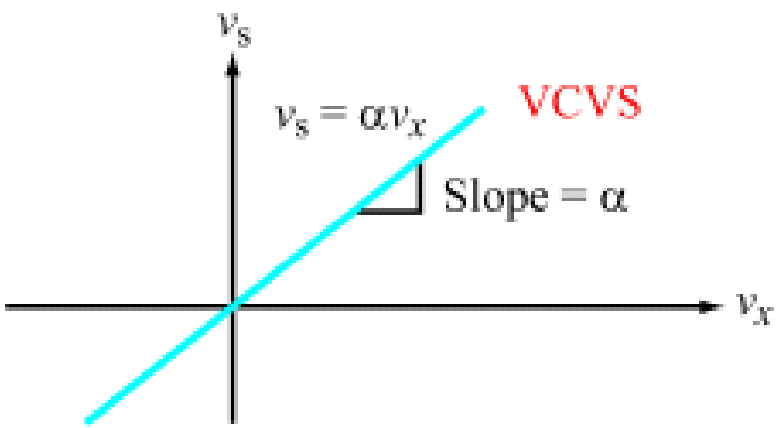

Equivalent Circuit Using Dependent Source

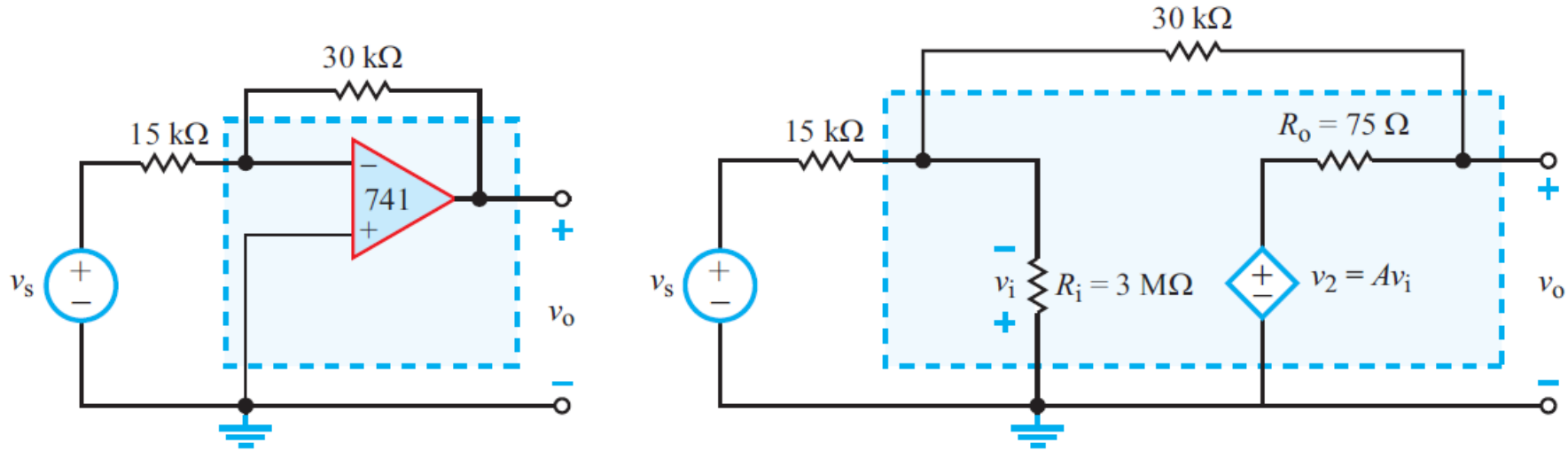

(a) Op-amp circuit

(b) Equivalent circuit with dependent source

Example 1-5: Dependent Source

- Given:

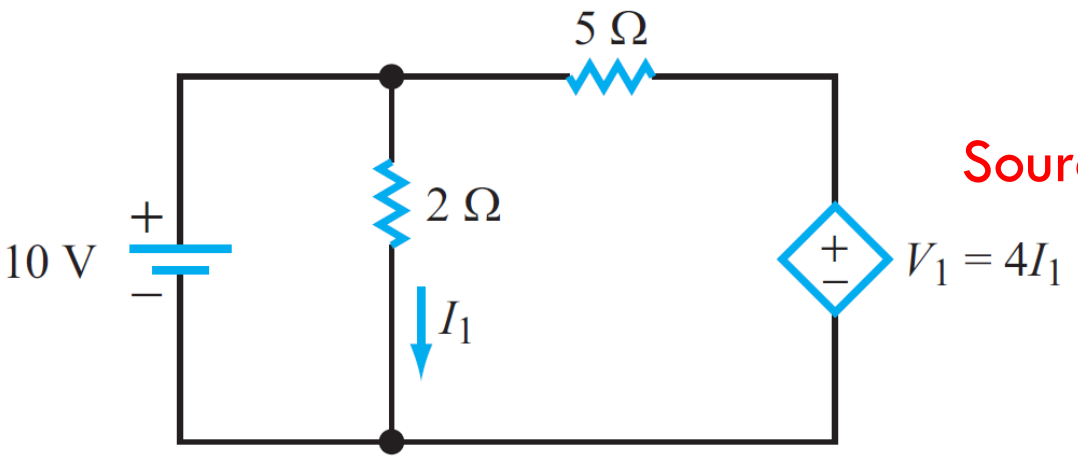

Source is CCVS

Determine: V_1

Solution:

Alternating Current/Direct Current

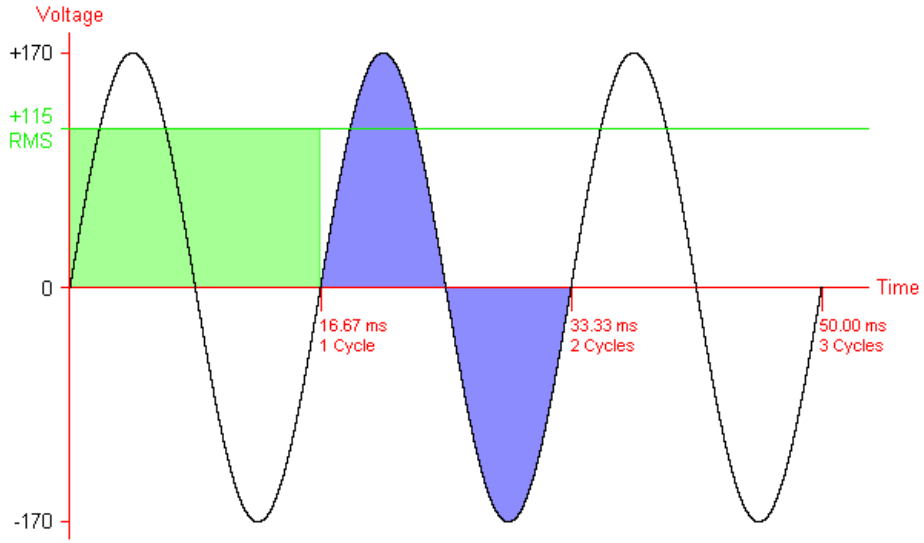

Alternating Current (AC): magnitude/direction vary cyclically

Direct Current (DC): magnitude/direction constant

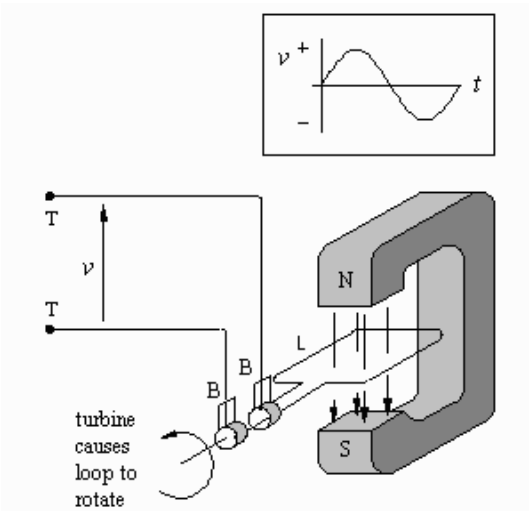

Power

Rate of expending or absorbing energy

$$P = \frac{dw}{dt} = \frac{dw}{dq}\frac{dq}{dt} = vi$$

$$\sum P = 0$$ Energy conservation

Units: watts

One watt = power rate of one joule of work per second. 1W = 1A x 1V

Passive Sign Convention

+ Power absorbed = - Power supplied

Element absorbing power

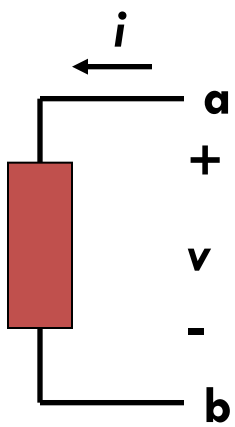

$p=+vi$

Element supplying power

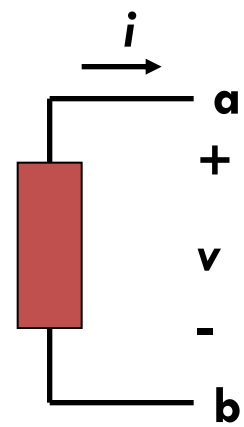

$p=-vi$

Passive sign convention

Current entering through the positive terminal of element has p=vi, current entering through the negative terminal has power p=-vi

If power is positive, element absorbs power
If power is negative, element supplies power

Energy and Volts

$$V_{ab} = -\int_a^b \vec{E}(\vec{r}) \bullet d\vec{\ell}$$

$$W_{e^-} = \int_a^b \vec{F}(\vec{r}) \bullet d\vec{\ell}$$

$$= \int_a^b -q\vec{E}(\vec{r}) \bullet d\vec{\ell}$$

$$= +qV_{ab}$$

$$= -(-q)V_{ab}$$

Charge on the electron

- Energy Change of an Electron (charge –q) Moved from point a to point b (in Joules):
- If $V_{ab}>0$, then the work done moving the electron is positive (electron has gained energy $W_{e^-} > 0$)

$\Rightarrow$Circuit Element (CE) has Supplied Energy (so it has lost energy $W_{CE} < 0$)

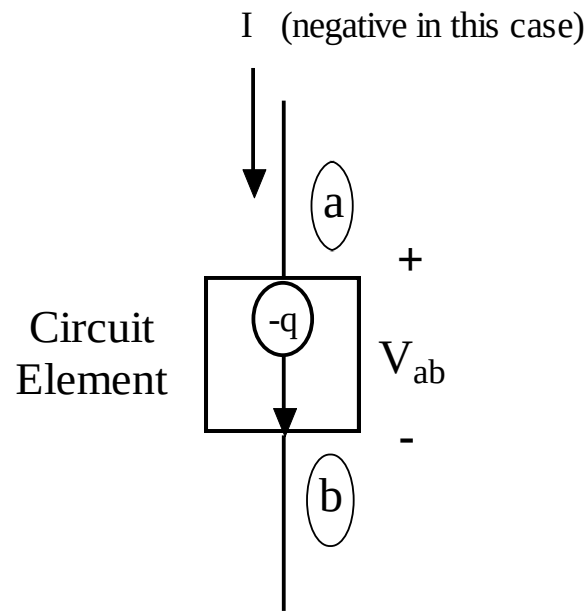

$W_{CE} = -W_{e^-}$ **by conservation of energy**

$W_{CE} \equiv$ **Energy change of circuit element**

$= -qV_{ab}$

Energy and Voltage

Generalizing the previous result

$W_{CE} \equiv$ **Energy change in the circuit element**

from moving a net charge Q **from a to b**

$$W_{CE} = QV_{ab} = -W_{charge\,carriers}$$

$W_Q \equiv W_{charge\,carriers}$ **Energy change of moving charge carriers**

$$\begin{cases} \textbf{So if } W_{CE} < 0 \textbf{ then } W_Q > 0 \\ \textbf{Carriers have gained energy,} \\ \textbf{Circuit Element has supplied Energy} \end{cases}$$

$$\begin{cases} \textbf{So if } W_{CE} > 0 \textbf{ then } W_Q < 0 \\ \textbf{Carriers have lost energy,} \\ \textbf{Circuit Element has absorbed (dissipated) Energy} \end{cases}$$

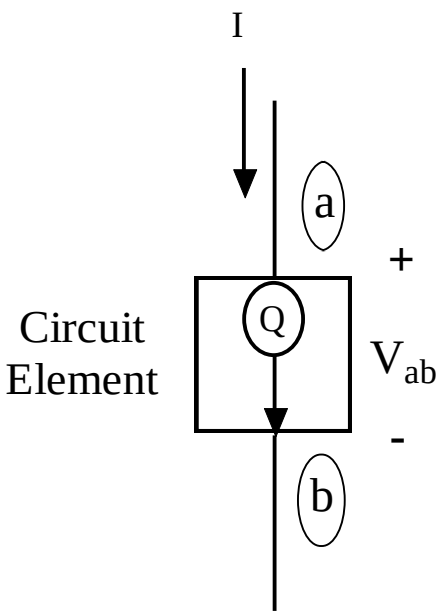

Power & Passive Sign Convention

Power dissipation is considered from the viewpoint of the circuit element,

Not from the viewpoint of the charge carriers (electrons or other), so

$$p \equiv p_{CE} = \frac{\partial W_{CE}}{\partial t}$$

$$W_{CE} = QV_{ab}$$

where Q is the net charge (including sign) moved from Node a to Node b.

$$I = \frac{\partial Q}{\partial t}$$

Thus

$$p \equiv p_{CE} = V_{ab}\frac{\partial Q}{\partial t} = V_{ab}I$$

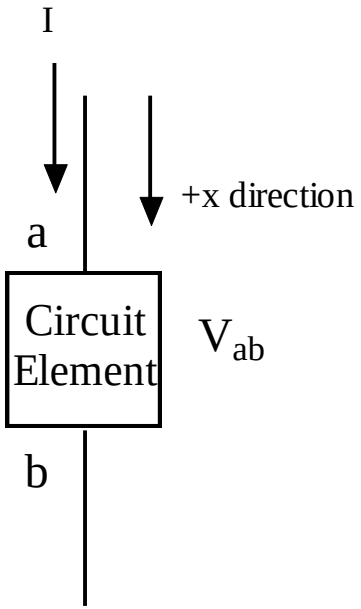

With this voltage and current sign reference

(I considered positive INTO node a):

If p>0, the circuit element dissipates power (charge carriers loose energy as they move through the CE)

If p<0, the circuit element supplies power (charge carriers gain energy as they move through the CE)

Passive Sign Convention

- So note the CRITICAL Facts from the last slides:
  - $P = V_{ab} \times I$ (I defined + flowing into a)
  - $P>0$ means circuit element DISSIPATES POWER
  - $P<0$ means circuit element SUPPLIES POWER
- This is precise, easy, but UNFORGIVING sign referencing systems is the <u>PASSIVE SIGN CONVENTION</u>

Passive Sign Convention Examples

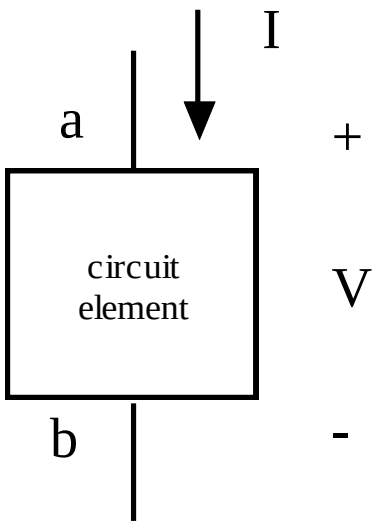

V=Vab	I	P
5V	5A	+25W (P-dissipated)
-5V	5A	-25W (P-supplied)
5V	-2A	-10W (P-supplied)
-3V	-6A	+18W (P-dissipated)

Power Conservation

- Energy is Conserved in Any Closed System, Therefore $\Rightarrow$
- Power is Conserved in Any Complete Circuit

$$\sum_{all_circuit_elements} P_{element} = 0$$

- All elements in the circuit must be included (passive and active components, power supplies)

Power Conservation Example

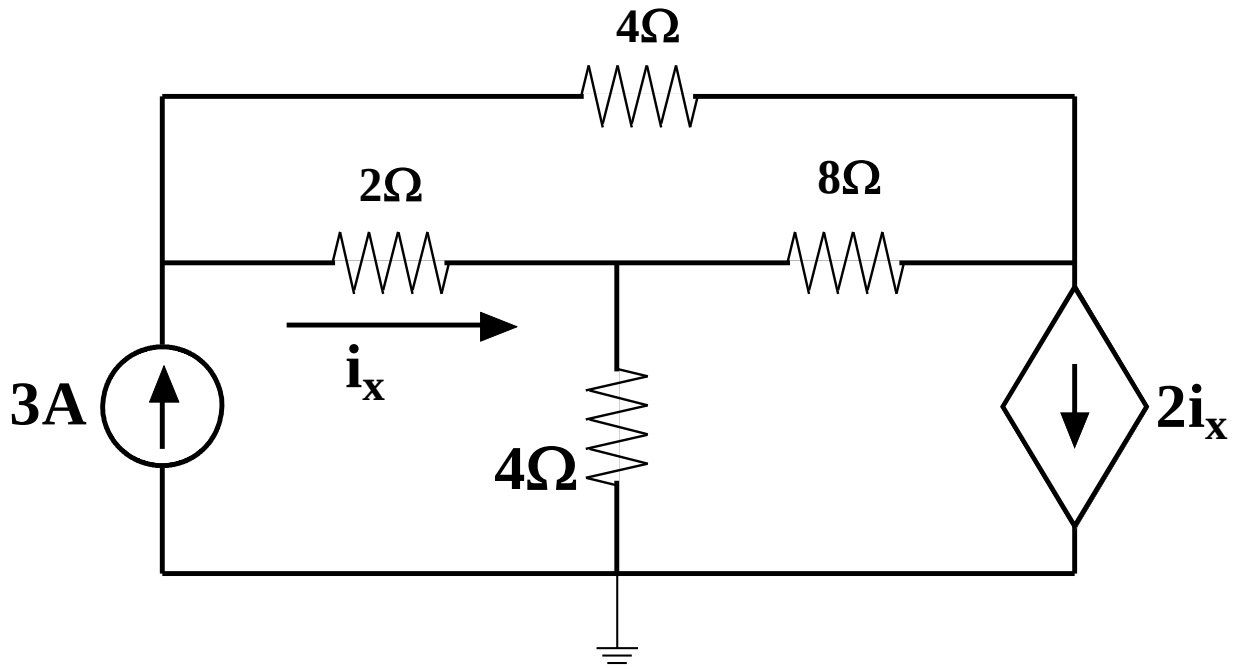

- Major objective in next lectures is how we would solve for all the voltage drops & current flows in a circuit such as the example above

Power Conservation Example

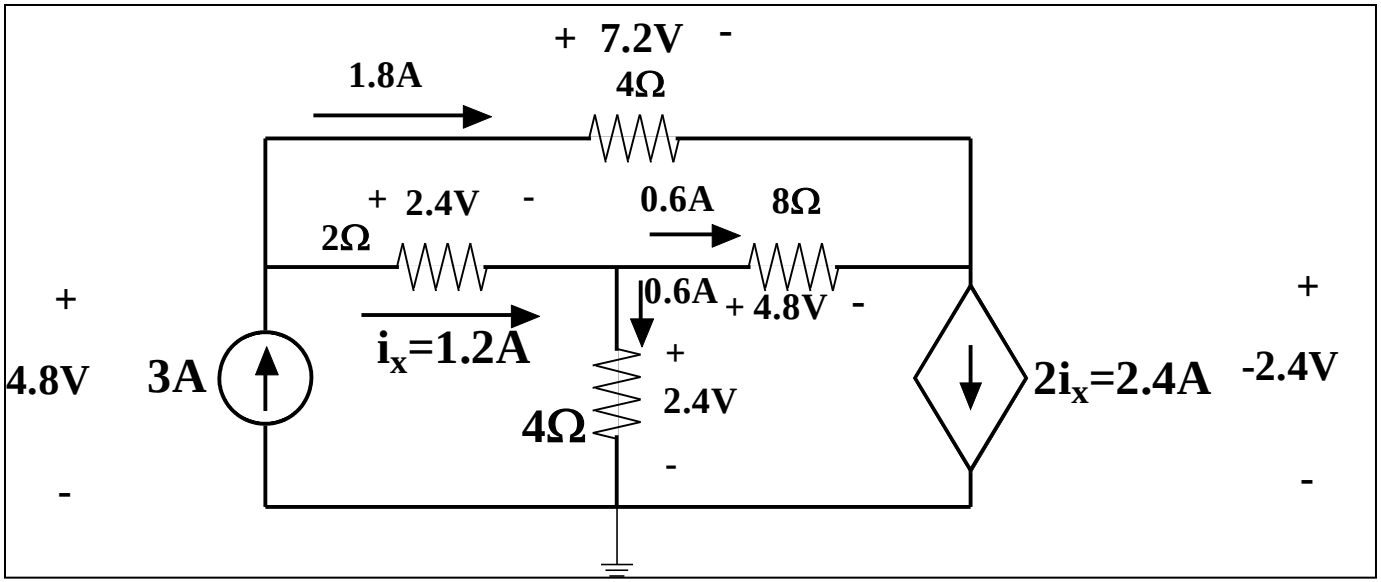

⇐Fully Solved Circuit

All Voltages and Currents Known

Note that

$$\sum P = 0$$

Be sure you understand each P's SIGN!

Power Conservation Example

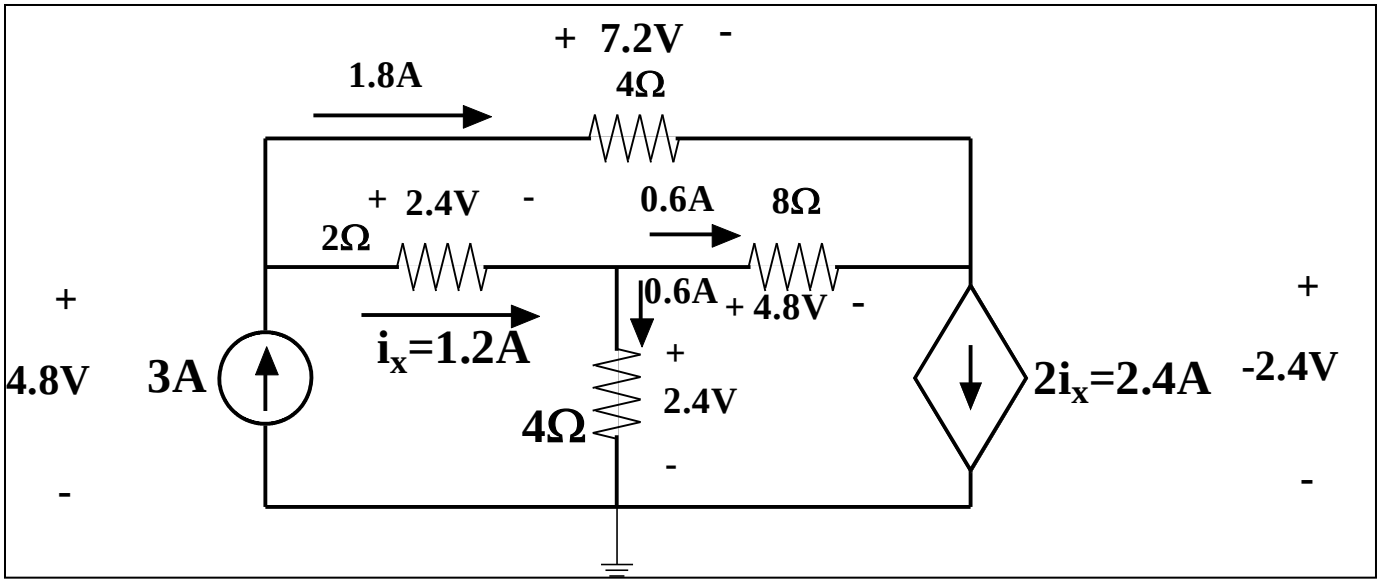

Power Conservation Example

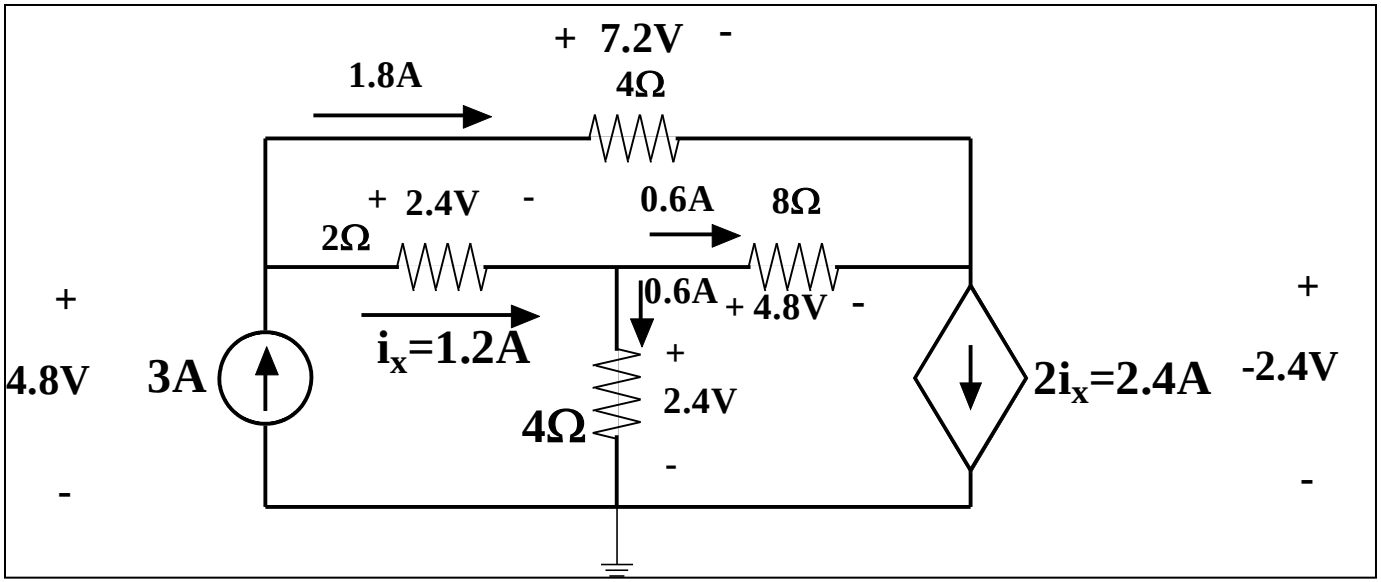

Power Conservation Example

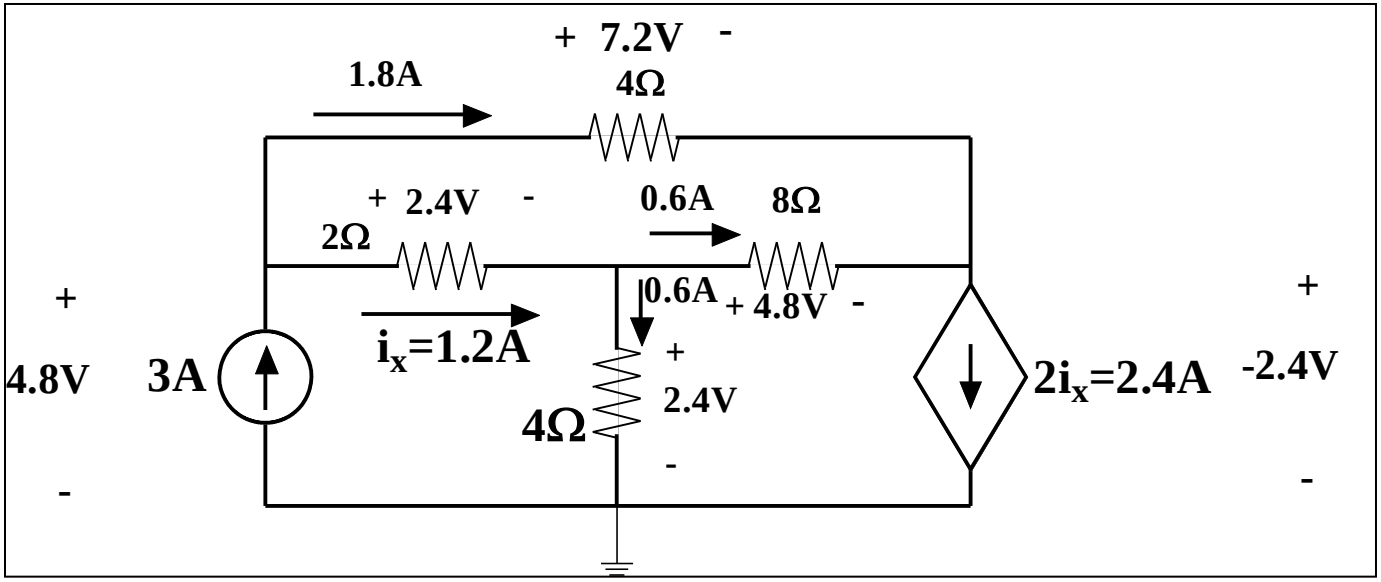

⇐Fully Solved Circuit

All Voltages and Currents Known

Note that

$$\sum P = 0$$

$P_{3A-Source}$	$=$	$(4.8V)(-3A)$	$=$	$-14.4W$
$P_{2\Omega}$	$=$	$(2.4V)(1.2A)$	$=$	$2.88W$
$P_{4\Omega-top}$	$=$	$(7.2V)(1.8A)$	$=$	$12.96W$
$P_{4\Omega-middle}$	$=$	$(2.4V)(0.6A)$	$=$	$1.44W$
$P_{8\Omega}$	$=$	$(4.8V)(0.6A)$	$=$	$2.88W$
$P_{2ix-source}$	$=$	$(-2.4V)(2.4A)$	$=$	$-5.76W$

Be sure you understand each P's SIGN!

Tech Brief 2: Moore's Law

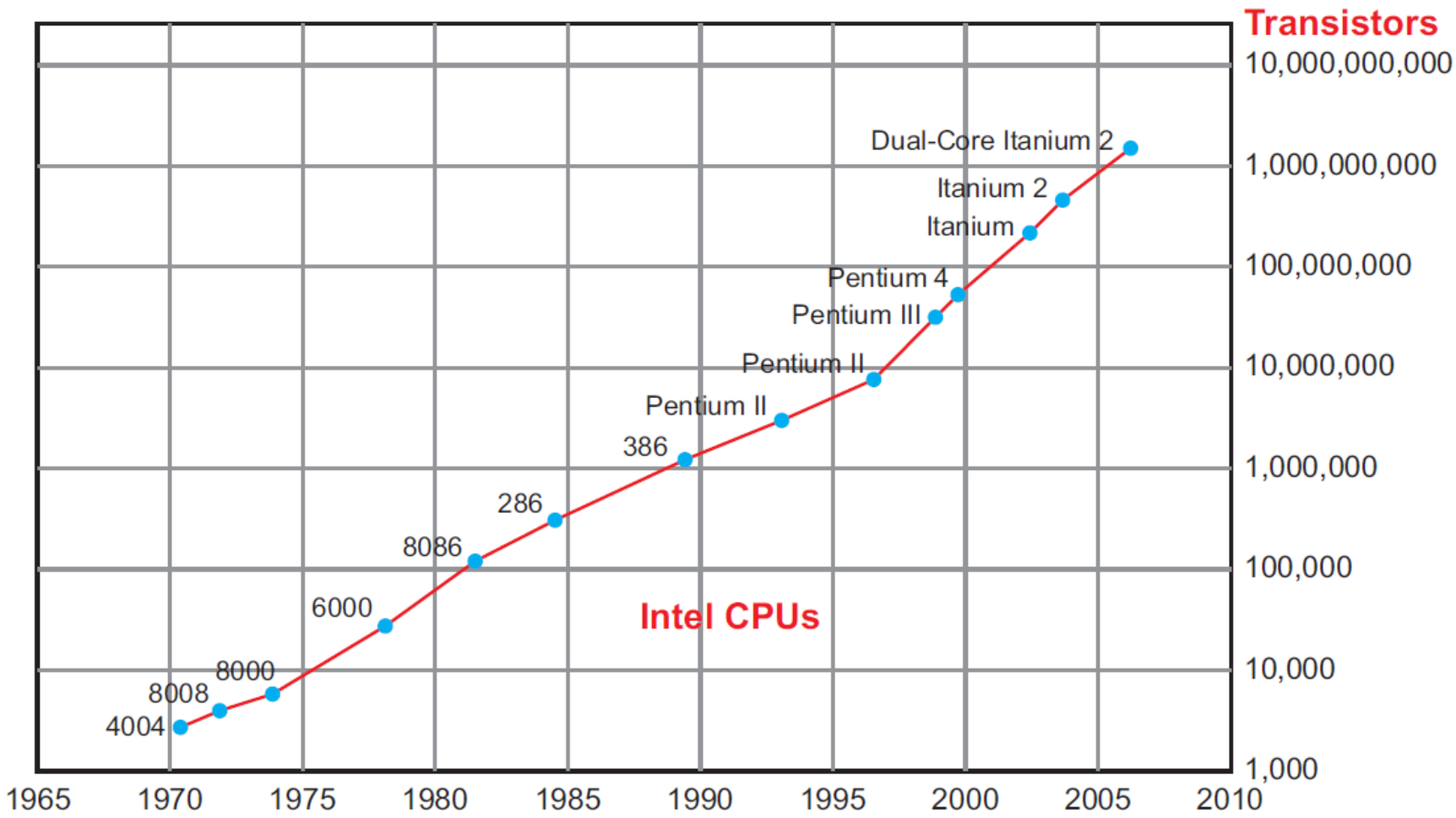

Figure TF2-1: Moore's Law predicts that the number of transistors per processor doubles every two years.

Tech Brief 2: Moore's Law

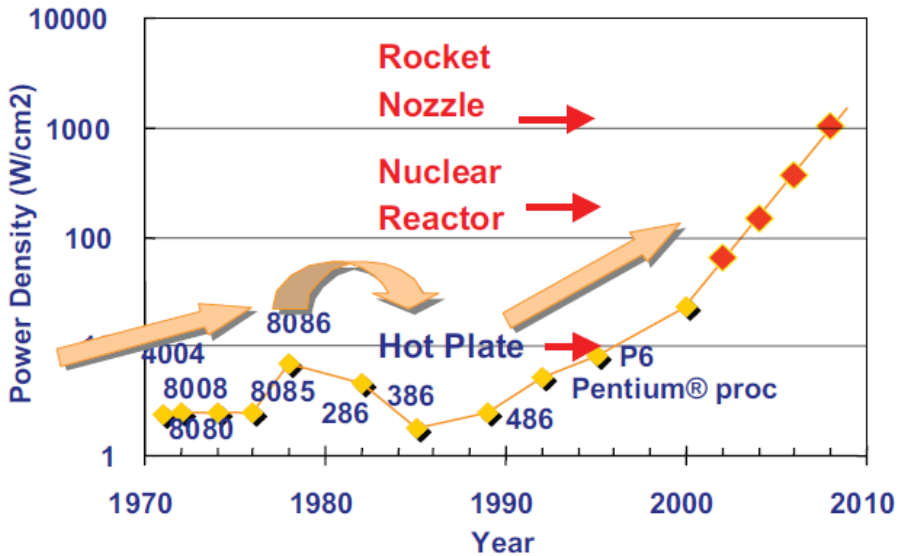

Challenges to Continuation of Moore's Law

- Heat dissipation
- Size (approaching atomic dimensions)

	Light Bulb	Integrated Circuit
Power dissipation	100 W	50 W
Surface area	106 cm^2 (bulb surface area)	1.5 cm^2 (die area)
Heat flux	0.9 W/cm^2	33.3 W/cm^2

Figure TF2-2: The power density generated by an IC in the form of heat is approaching the densities produced by a nuclear reactor. (Courtesy of Jan Rabey, University of California, Berkeley.)

Summary

Chapter 1 Relationships

Ohm's law $i = v/R$

Current $i = dq/dt$

Direction of i = direction of flow of (+) charge

Charge transfer $q(t) = \int_{-\infty}^{t} i\, dt$

$$\Delta Q = q(t_2) - q(t_1) = \int_{t_1}^{t_2} i\, dt$$

Voltage = potential energy difference

Passive sign convention Direction of i is into $+v$ terminal of device

Power $p = vi$

If $p > 0$ → device absorbs power

If $p < 0$ → device delivers power

i–v relationships

Resistor	$v_R = Ri_R$
Capacitor	$i_C = C\, dv_C/dt$
Inductor	$v_L = L\, di_L/dt$