Generalized Nodal Analysis

$$i_3 + \left(\frac{v_1 - v_2}{20\Omega}\right) + 6A - 4A = 0 \qquad \textit{KCL Node 1}$$

$$-i_2 + \left(\frac{v_2 - v_1}{20\Omega}\right) + \left(\frac{v_2 - v_4}{10\Omega}\right) + 8A = 0 \qquad \textit{KCL Node 2}$$

$$i_2 - 6A - i_1 + \left(\frac{v_3}{50\Omega}\right) = 0 \qquad \textit{KCL Node 3}$$

$$i_1 + \left(\frac{v_4 - v_2}{10\Omega}\right) + \left(\frac{v_4}{40\Omega}\right) + 4A = 0 \qquad \textit{KCL Node 4}$$

$$v_1 = V_1 \qquad \textit{KVL (known symbolic parameter)}$$

$$v_3 - v_2 = 4v_{20} \qquad \textit{KVL}$$

$$v_4 - v_3 = 400V \qquad \textit{KVL}$$

$$v_{20} = v_2 - v_1 \qquad \textit{KVL / Dependent Source Variable}$$

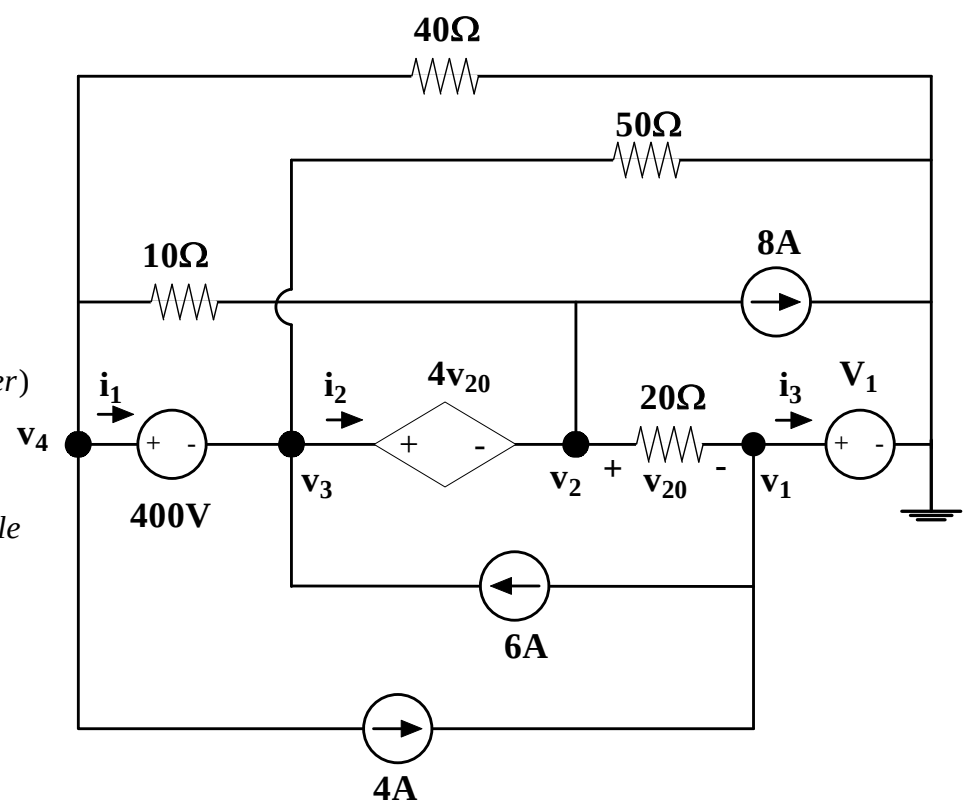

Redraw

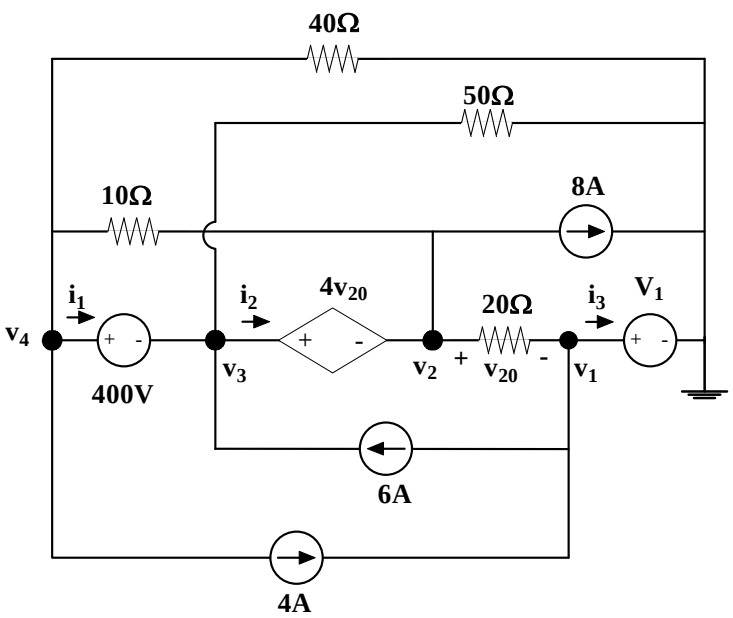
40Ω
50Ω
10Ω
8A
i1
i2
4v20
20Ω
i3
V1
v4
v3
v2
v20
v1
400V
6A
4A

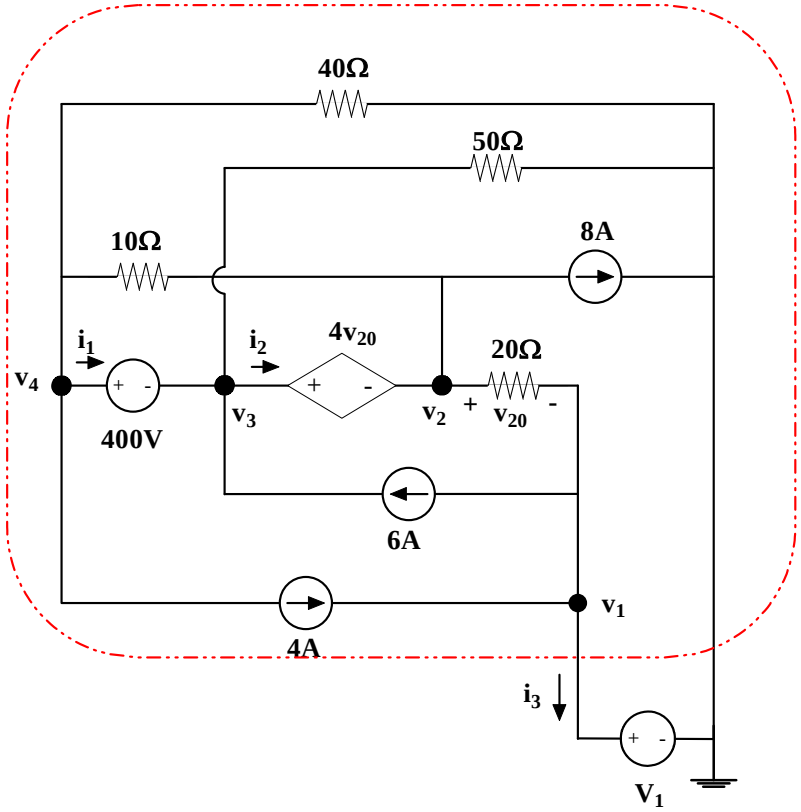
40Ω
50Ω
10Ω
8A
i1
i2
4v20
20Ω
v4
v3
v2
v20
400V
6A
v1
4A
i3
V1

From Modified Nodal Analysis

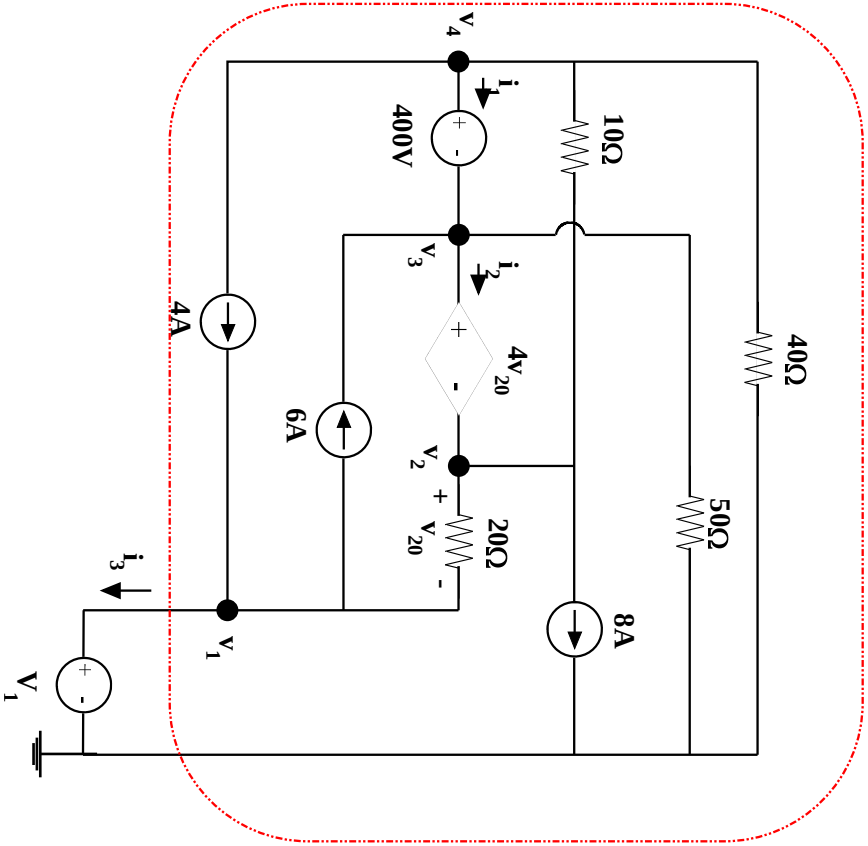

$$i_3 = \left(-\frac{54}{11}A\right) - \left(\frac{9}{1100}\Omega^{-1}\right)V_1$$

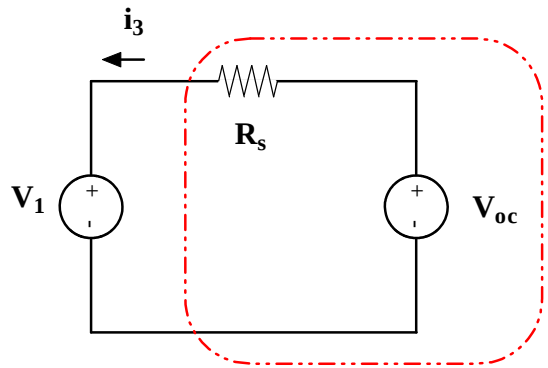

$$i_3 = \frac{V_{oc} - V_1}{R} = \left(\frac{V_{oc}}{R}\right) - \left(\frac{1}{R}\right)V_1$$

Source Transform

$$i_3 = \left(-\frac{54}{11}A\right) - \left(\frac{9}{1100}\Omega^{-1}\right)V_1$$

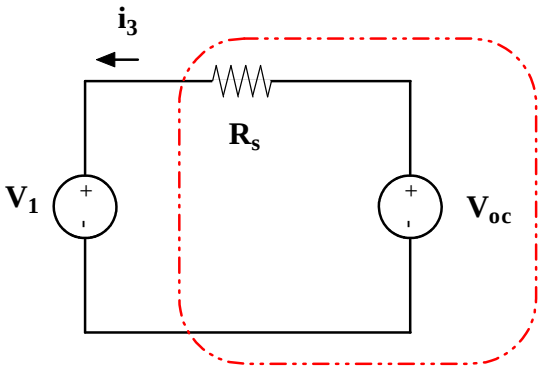

$$i_3 = \frac{V_{oc} - V_1}{R} = \left(\frac{V_{oc}}{R}\right) - \left(\frac{1}{R}\right)V_1$$

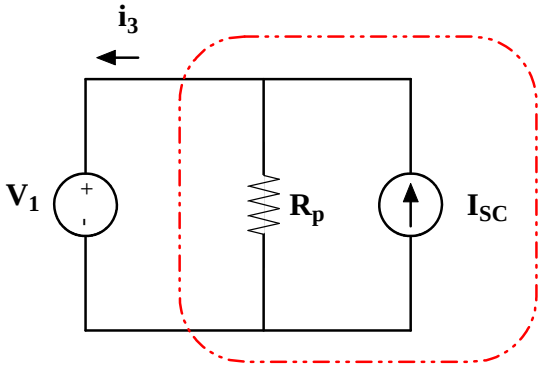

$$i_3 = I_{SC} - \frac{V_1}{R} = I_{SC} - \left(\frac{1}{R}\right)V_1$$