OPERATIONAL AMPLIFIERS: OP-AMPS PART 2 MULTI-STAGE CIRCUITS &NON-LINEARITY ISSUES

© Fred Terry
Fall, 2013

Multi-Stage Opamp Example

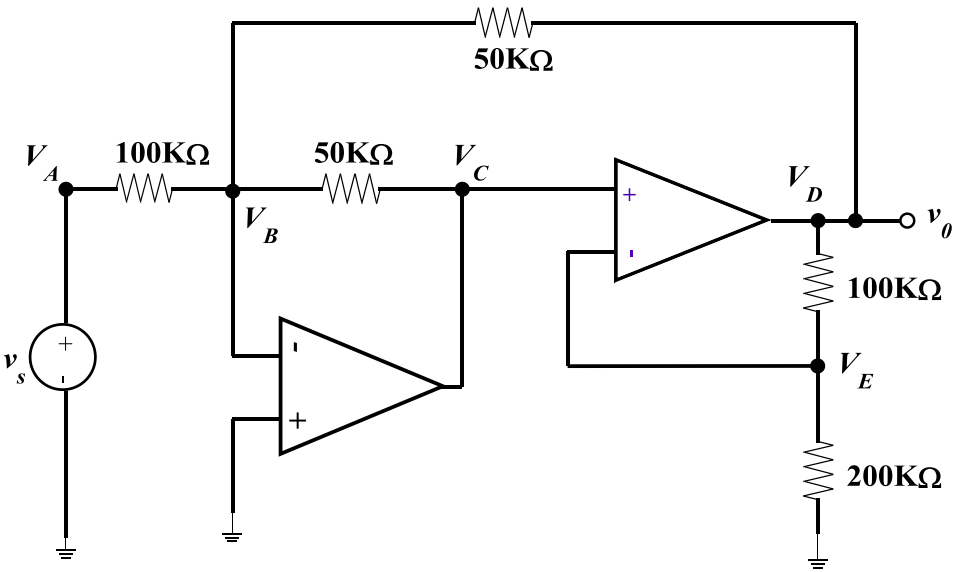

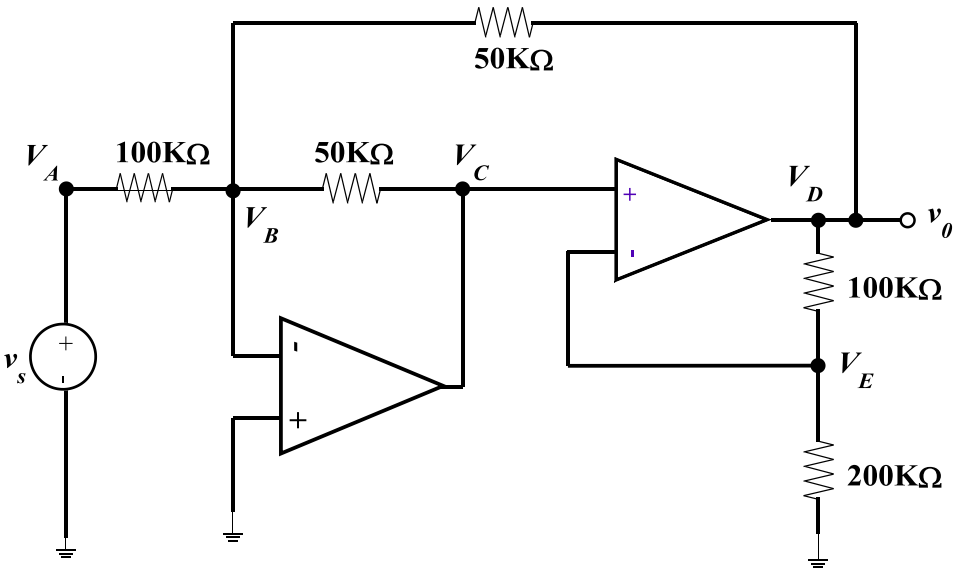
50KΩ
V_A
100KΩ
50KΩ
V_C
V_D
v_0
V_B
100KΩ
v_s
V_E
200KΩ

Multi-Stage Op-Amp Ex 2

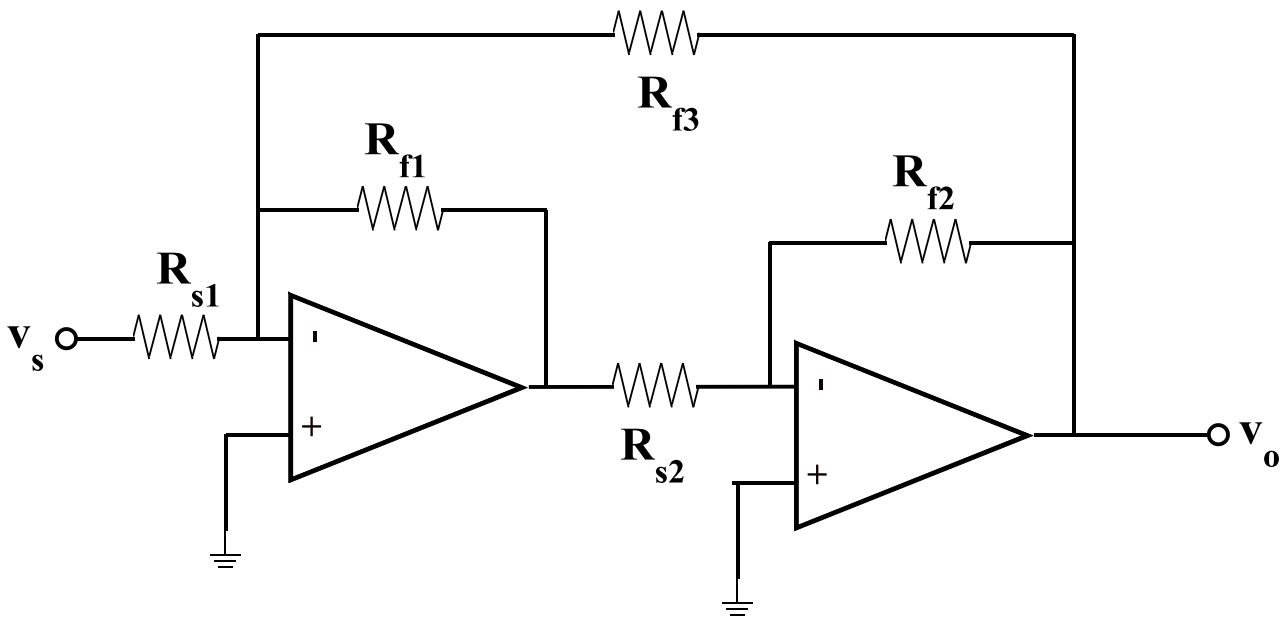

Multi-Stage Op-Amp Ex 2

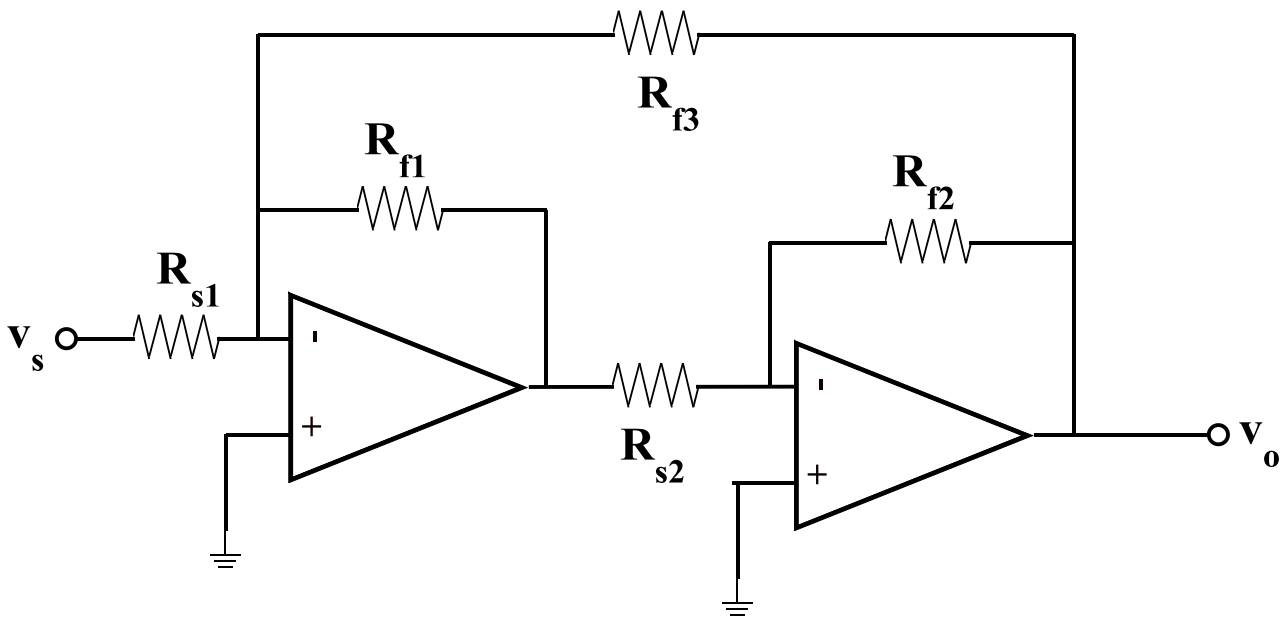

Multi-Stage Op-Amp Ex 2

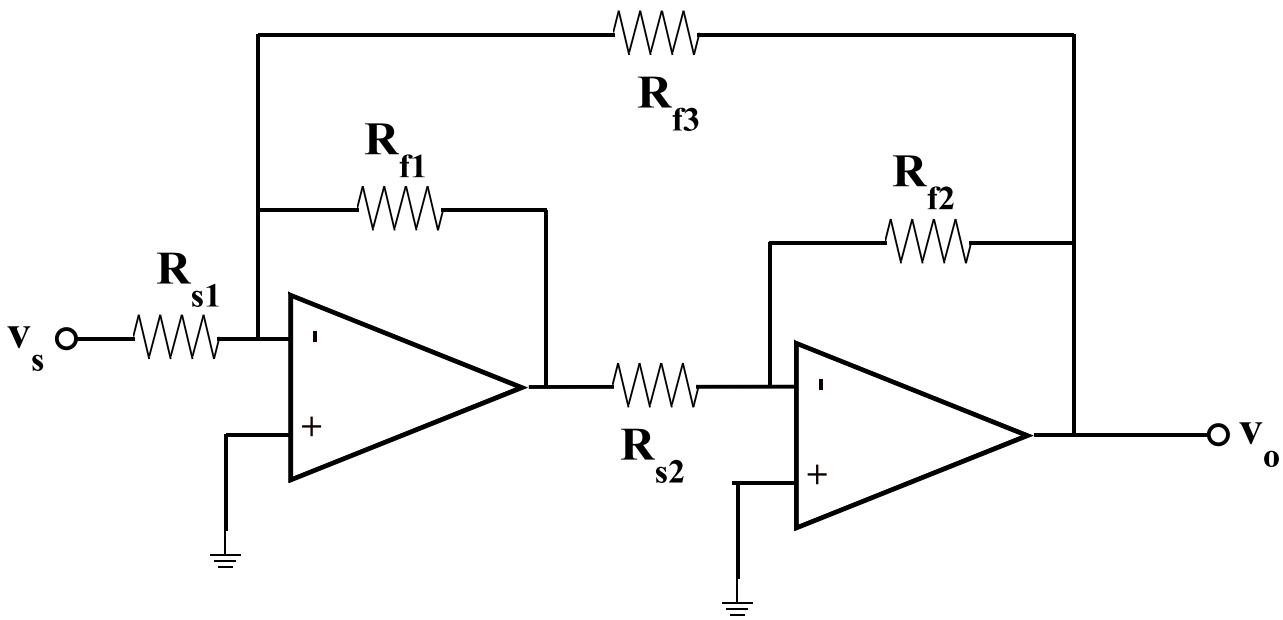

Extensions: Summing Amp

$$V_- = V_+ = 0$$

$$i_1 = \frac{V_1}{R_1}$$

$$i_2 = \frac{V_2}{R_2}$$

$$i_3 = \frac{V_3}{R_3}$$

$$i_f = i_1 + i_2 + i_3$$

$$V_o = -R_f i_f = -R_f \left[\frac{V_1}{R_1} + \frac{V_2}{R_2} + \frac{V_3}{R_3} \right]$$

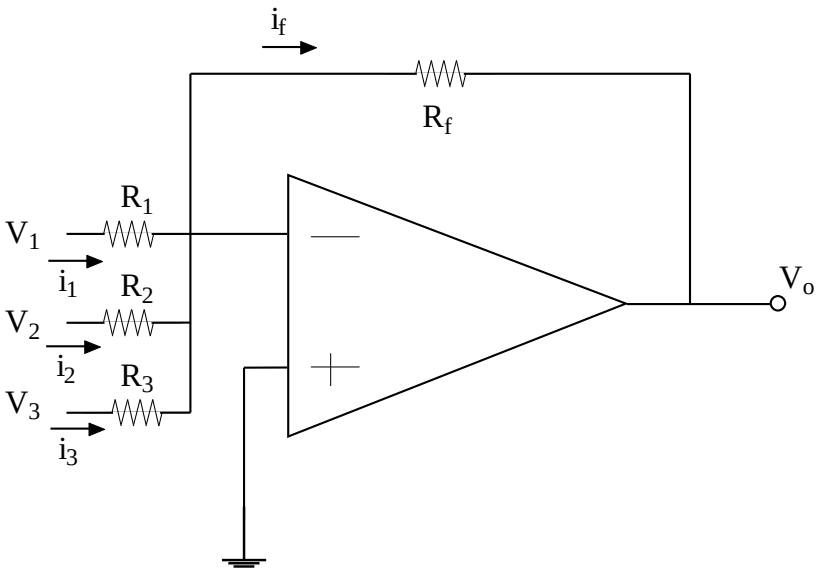

Band-Pass Filter

- Allows a certain range of frequencies to pass and cuts off the rest
  - Bass, Mid-range, Treble, etc.
- Suppose we have several filters (different f_i's) and we want to build a graphic equalizer
- Let's look at a case with 3 filters just to keep it simple

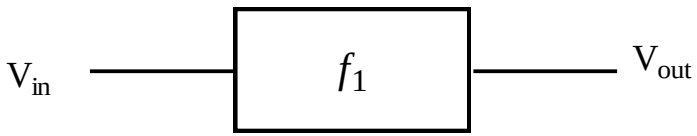

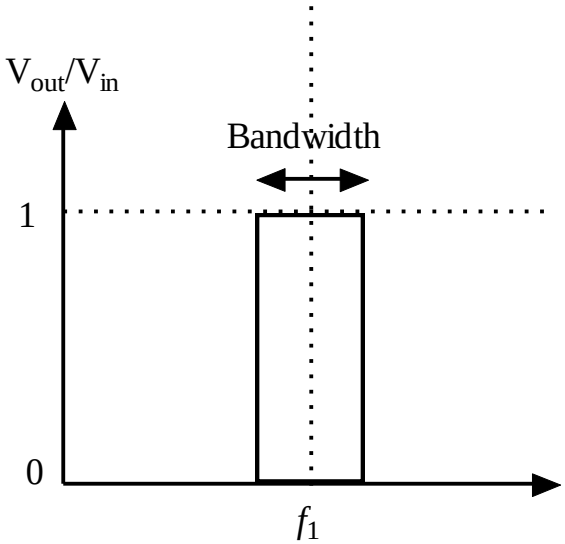

Suggested Layout

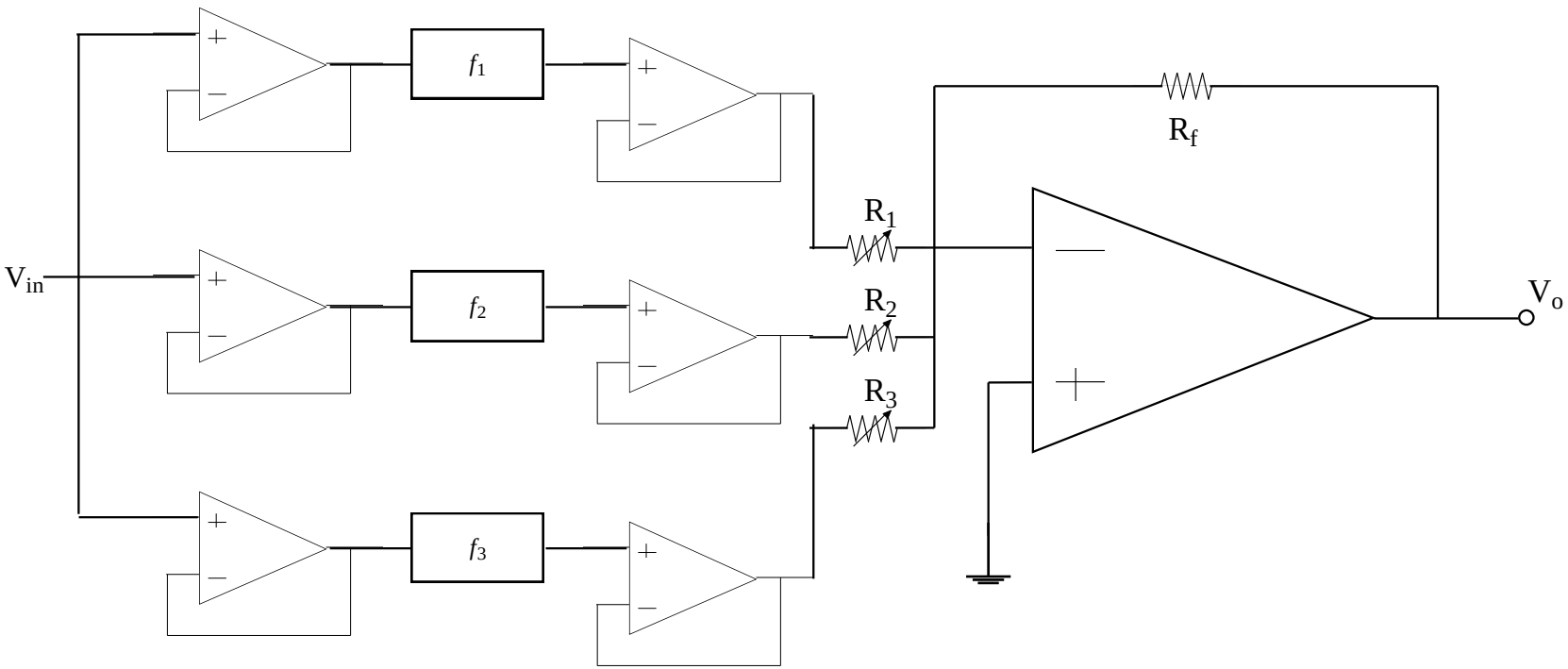

Why do it this way?

Trans-Impedance Amplifier

- Objective: Linearly Convert Current to Voltage
  - Useful for many types of measurement, particularly small currents
  - Photodetectors (Photomultiplier tubes, etc.)
  - MEMS Devices

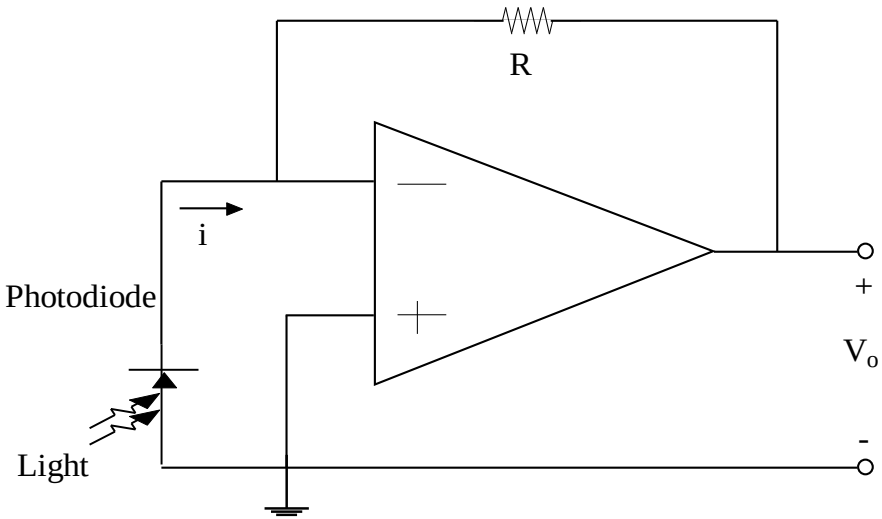

Light Meter I

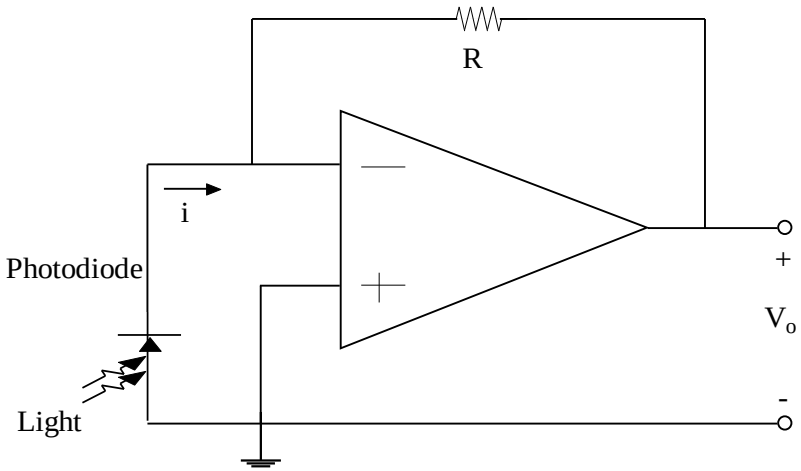

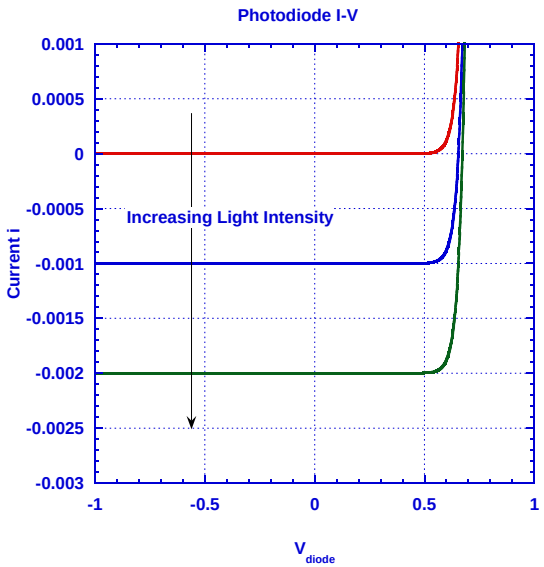

Non-Linear Example

What is V_o vs V_{in}?

How could I use this as an Thermometer?

$$i \approx I_s e^{qV_A/(nk_BT)}$$

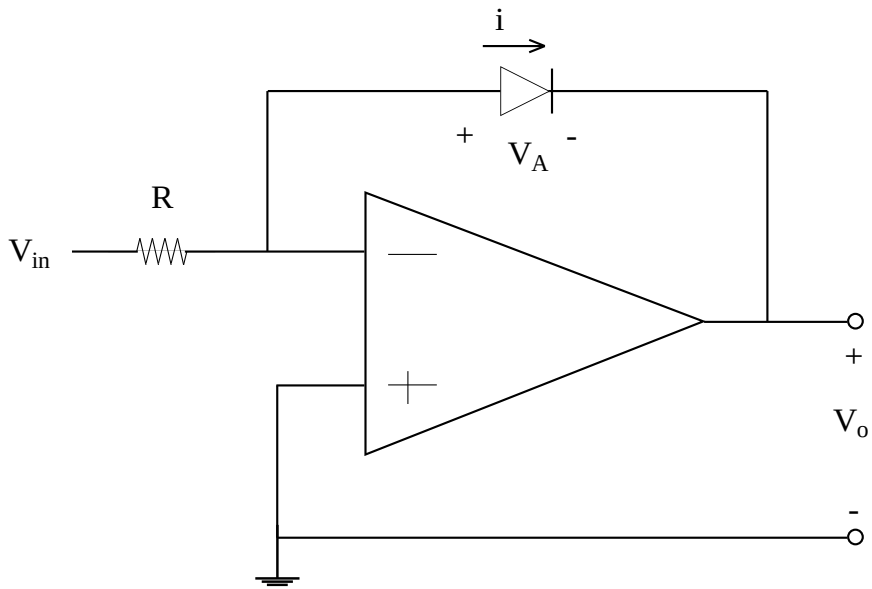

Light Meter II

$$i \approx I_s e^{qV_A/(nk_BT)}$$

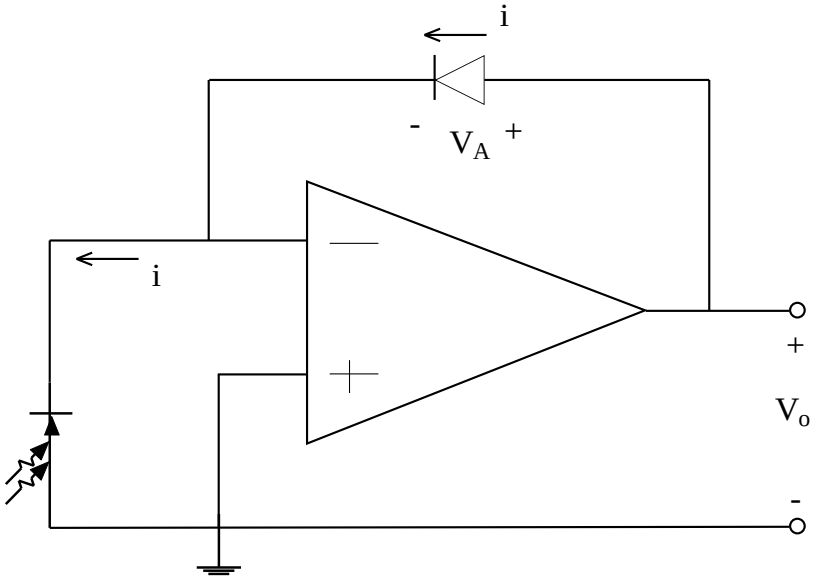

Some Aspects of Nonlinear Circuits

- ***KVL & KCL Still Apply***
  - Nonlinear Element Constraints Coupled with Network Constraints Require More Complex Solution Methods
- Sometimes Piecewise Linear Approaches Work
  - Notion of Small Signal Model: Linearization Around an Operating Point (to be discussed in transistor material)
- Possibilities for Multiple Valued Solutions (multiple stable or metastable solutions / non-monotonic I-V relationships)
- Negative Feedback Can Improve Linearity
- Harmonic Generation & Frequency Mixing

Example: Finite Gain Op Amp with Non-Linearity

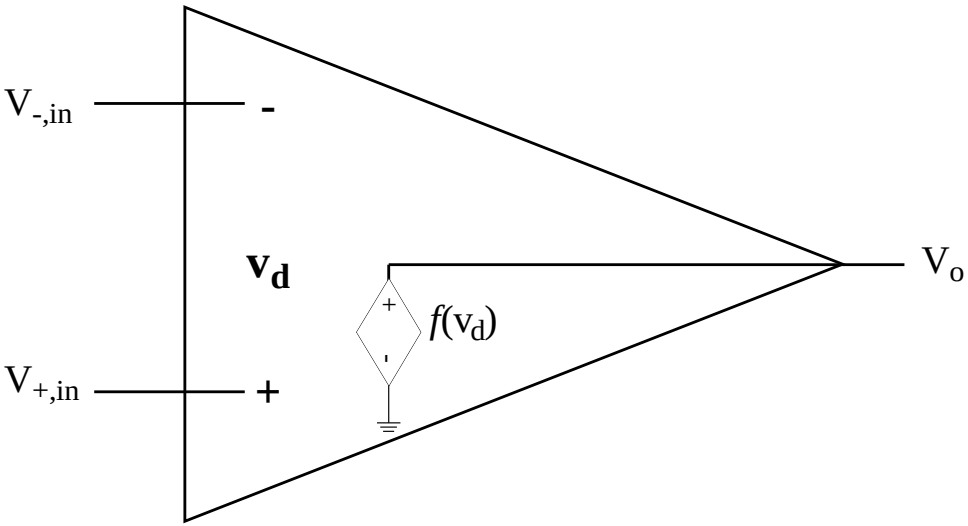

Function Chosen to Yield Linearity for small v_d and limit to V_{CC} at high v_d Physically Appropriate Model For Bipolar Op-amps

$$f(v_d) = V_{CC} \tanh\left(\frac{Av_d}{V_{CC}}\right)$$

$$If\ \ v_d \ll \frac{V_{CC}}{A},\ \ f(v_d) \approx Av_d$$

$$Example\ \ A = 100\ V_{CC} = 15$$

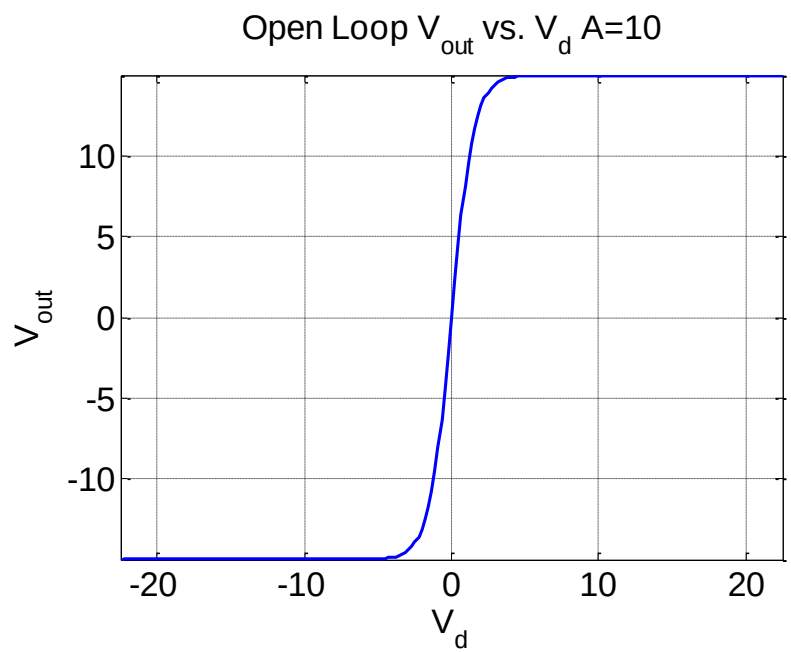

Example: Finite Gain Op Amp with Non-Linearity

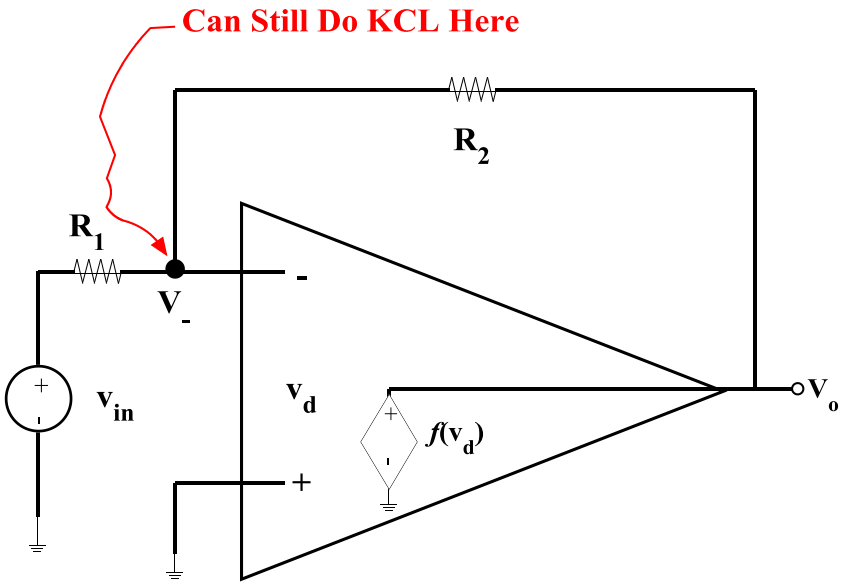

Example: Finite Gain Op Amp with Non-Linearity

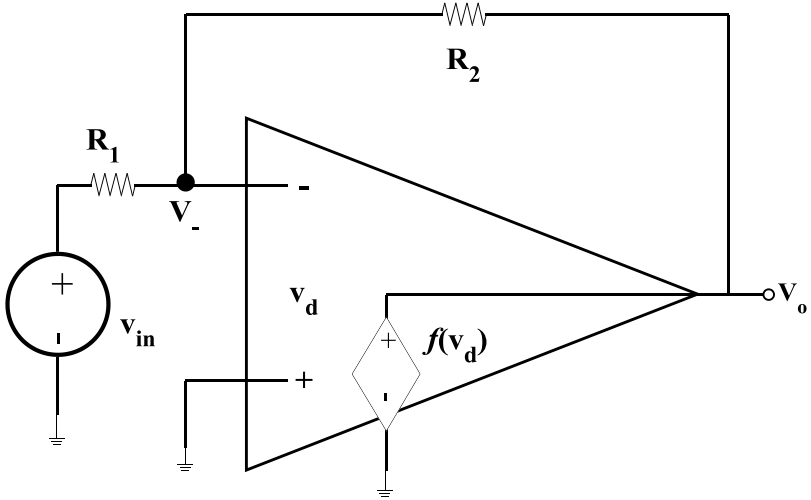

$$V_-\left[\frac{1}{R_1}+\frac{1}{R_2}\right]+V_o\left[-\frac{1}{R_2}\right]=\frac{V_{in}}{R_1}\quad KCL$$

$$v_d=-V_-$$

$$V_-\left[\frac{1}{R_1}+\frac{1}{R_2}\right]+f\left(-V_-\right)\left[-\frac{1}{R_2}\right]=\frac{V_{in}}{R_1}$$

or

$$V_-\left[1+\frac{R_1}{R_2}\right]+f\left(-V_-\right)\left[-\frac{R_1}{R_2}\right]-V_{in}=0$$

Solve Numerically (such as Newton's Method) for V_-

Single solution in this case since $f(v_d)$ is monotonic

$$V_o=f\left(-V_-\right)$$

$$Example\ \ A=100\ V_{CC}=15\ R_1=1K\Omega\quad R_2=20K\Omega$$

Linearizing Effect of Negative Feedback

As long as $f(v_d)$ is a monotonic, odd function and big enough, we will get near ideal, linear closed loop performance

$$A(v_d) \equiv \frac{1}{v_d} f(v_d) \gg 1 \text{ and an even function}$$

$$V_-\left[1+\frac{R_1}{R_2}\right] + f(-V_-)\left[-\frac{R_1}{R_2}\right] - V_{in} = 0$$

$$v_d\left[1+\frac{R_1}{R_2}\right] + v_o\left[\frac{R_1}{R_2}\right] + V_{in} = 0$$

$$v_d\left[1+\frac{R_1}{R_2}\right] + v_d A(v_d)\left[\frac{R_1}{R_2}\right] + V_{in} = 0$$

$$\left.\begin{aligned} v_d &= -\left[\frac{R_2}{\{A(v_d)+1\}R_1 + R_2}\right]V_{in} \to 0 \\ v_o &= v_d A(v_d) = -\left[\frac{R_2 A(v_d)}{\{A(v_d)+1\}R_1 + R_2}\right]V_{in} \to -\left[\frac{R_2}{R_1}\right]V_{in} \end{aligned}\right\} \text{for } A(v_d) \gg \frac{R_2}{R_1}$$

A=10

$$V_{CC} = 15 \quad R_1 = 1K\Omega \quad R_2 = 20K\Omega$$

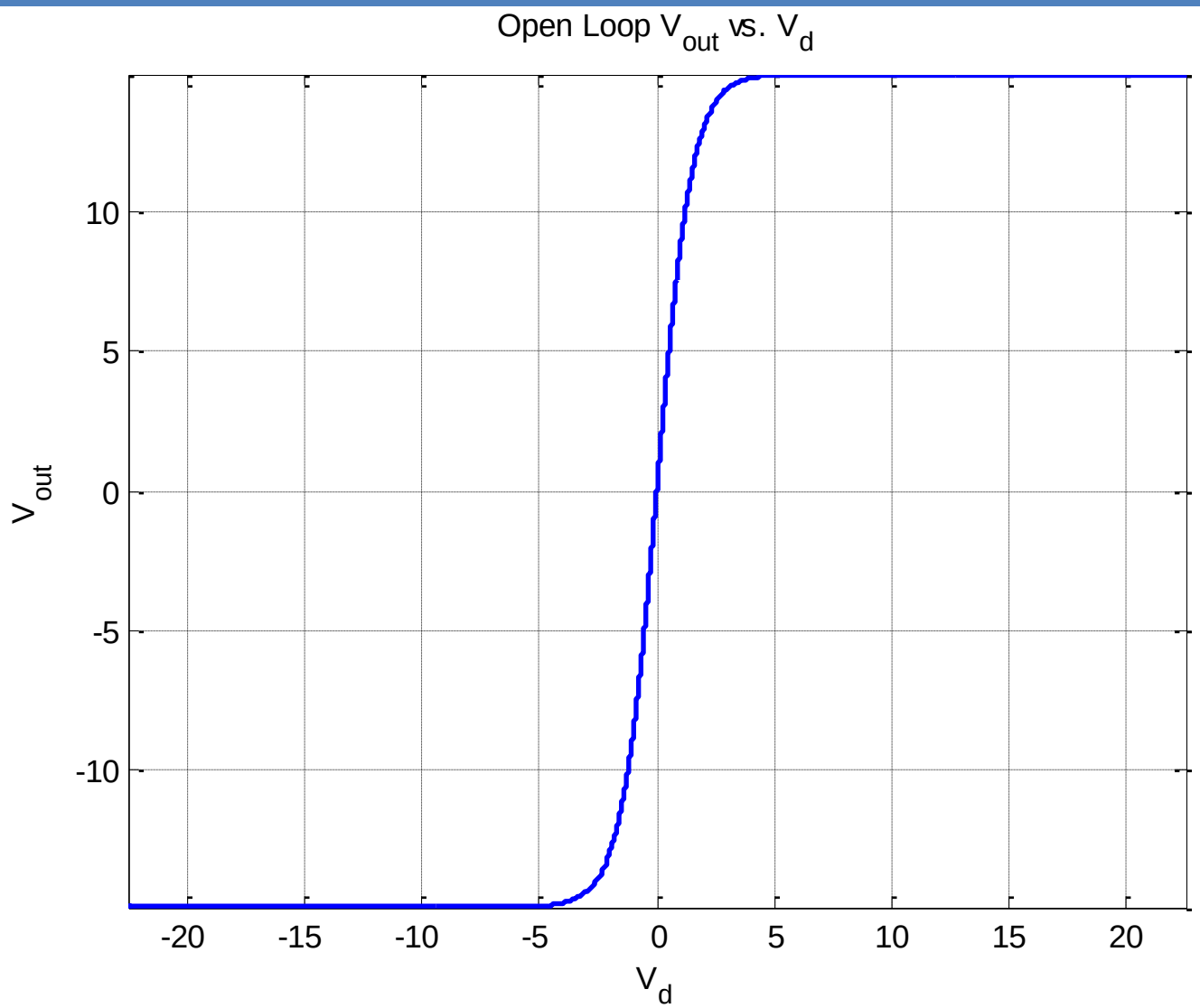

A=10 Circuit $A_V \approx -6.45$

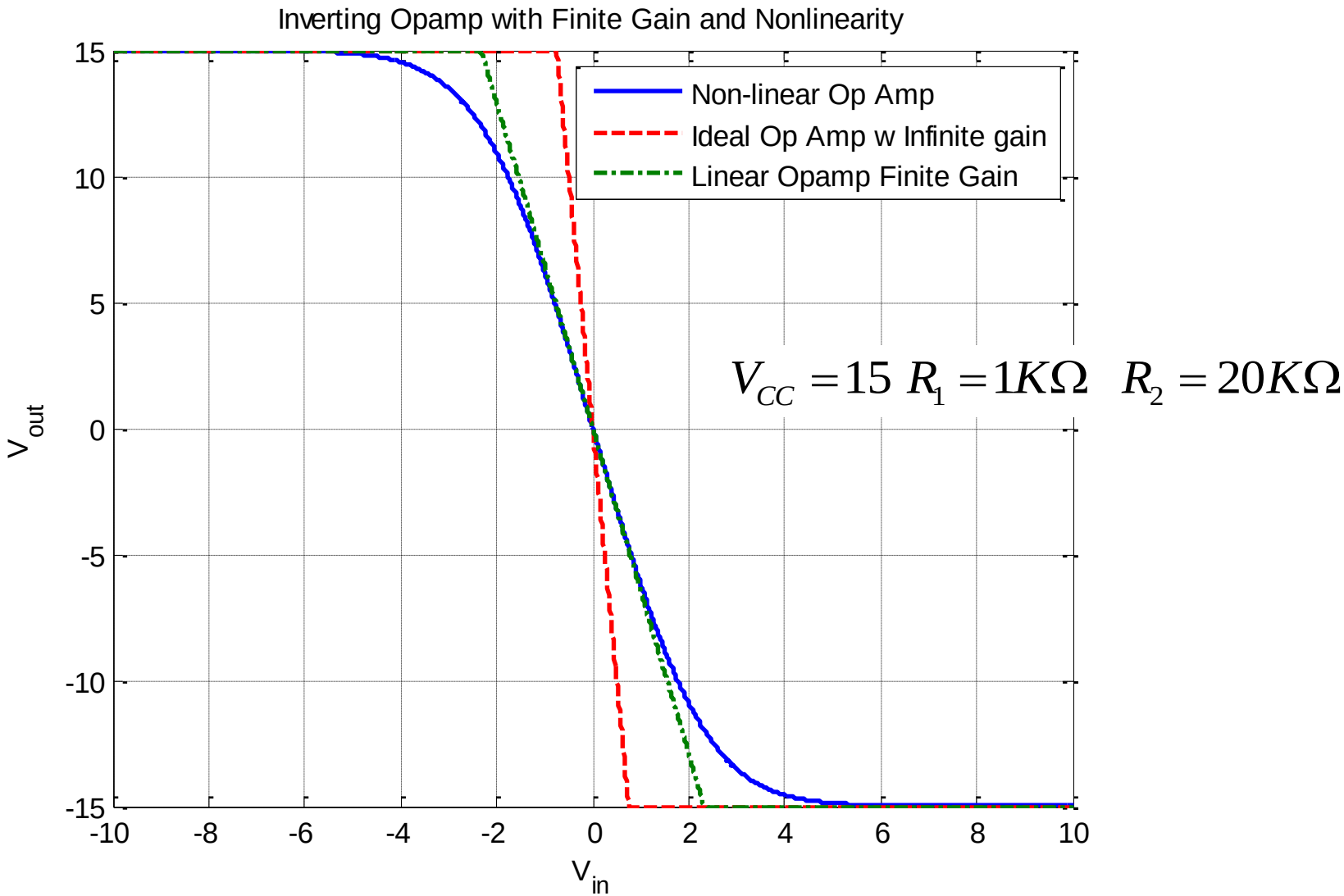

A=100

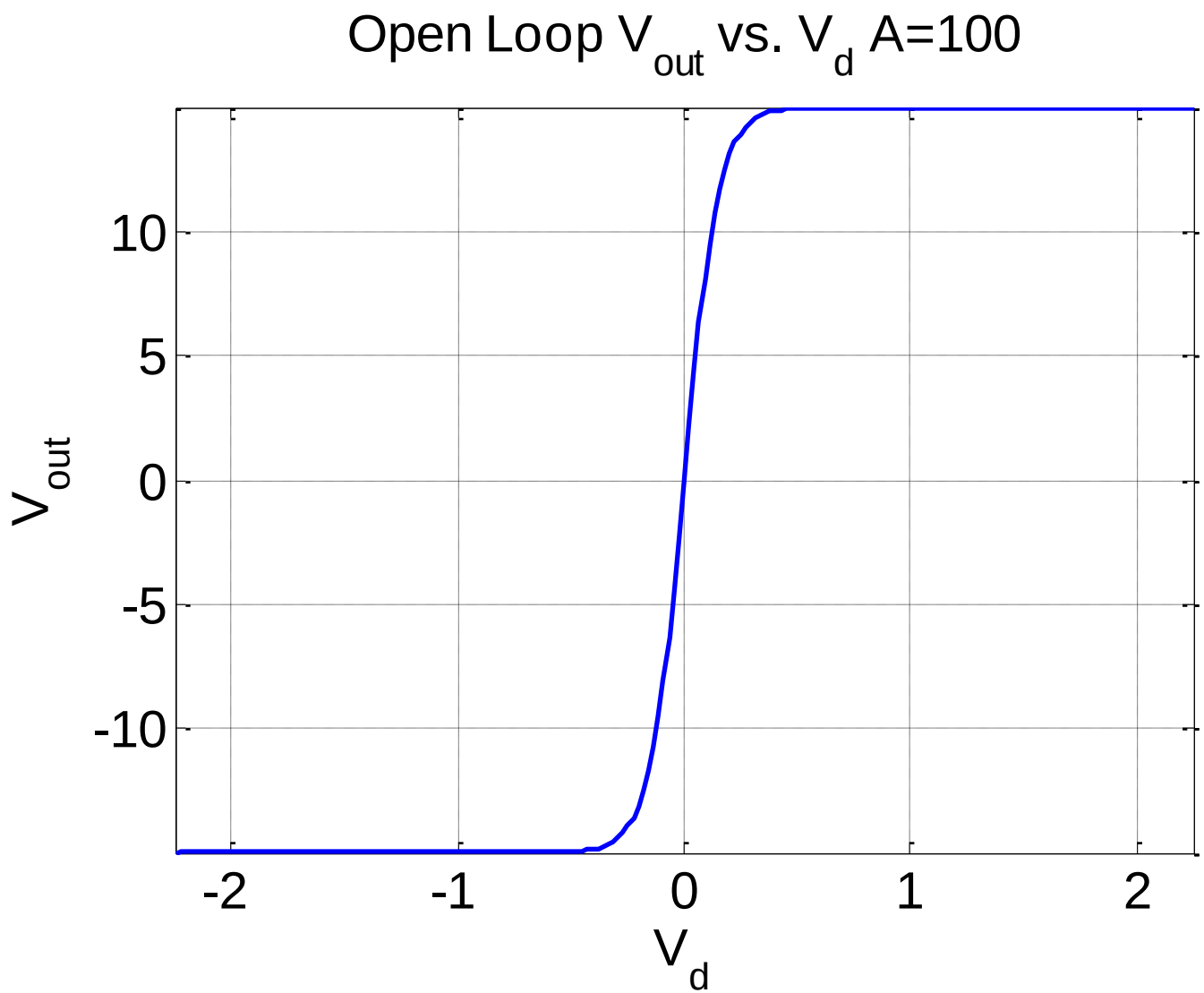

A=100

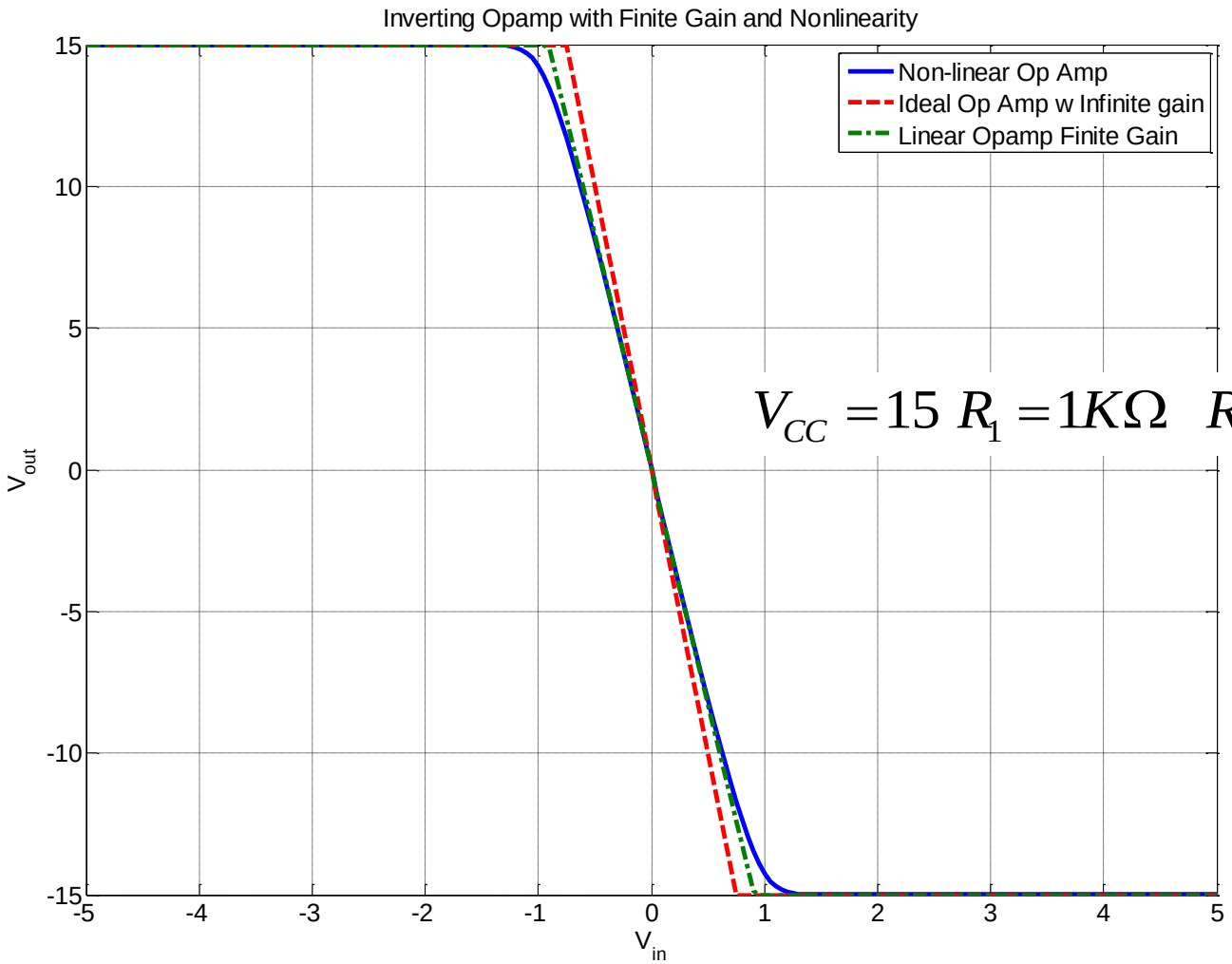

$$V_{CC} = 15 \quad R_1 = 1K\Omega \quad R_2 = 20K\Omega$$

A=1000

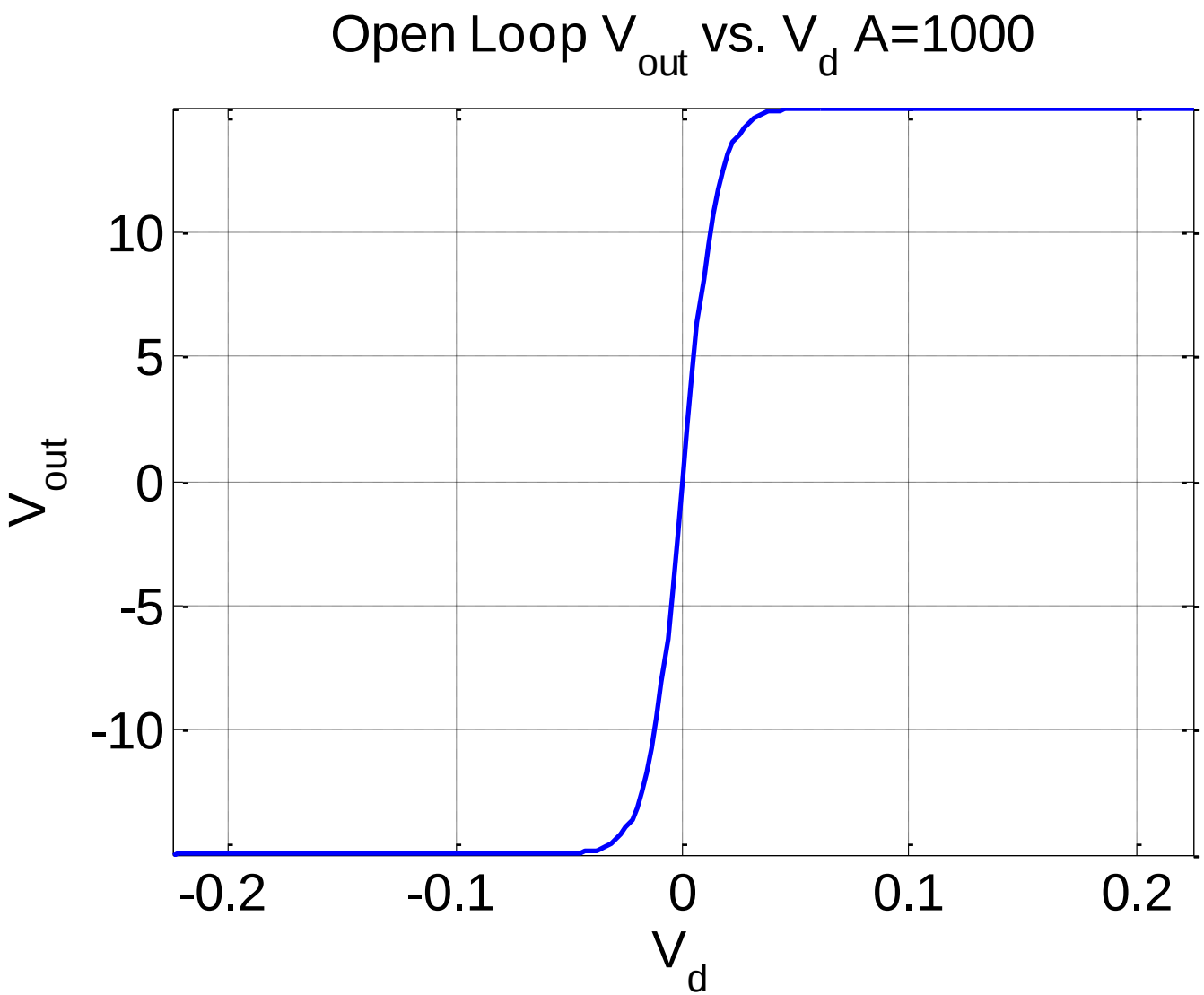

A=1000

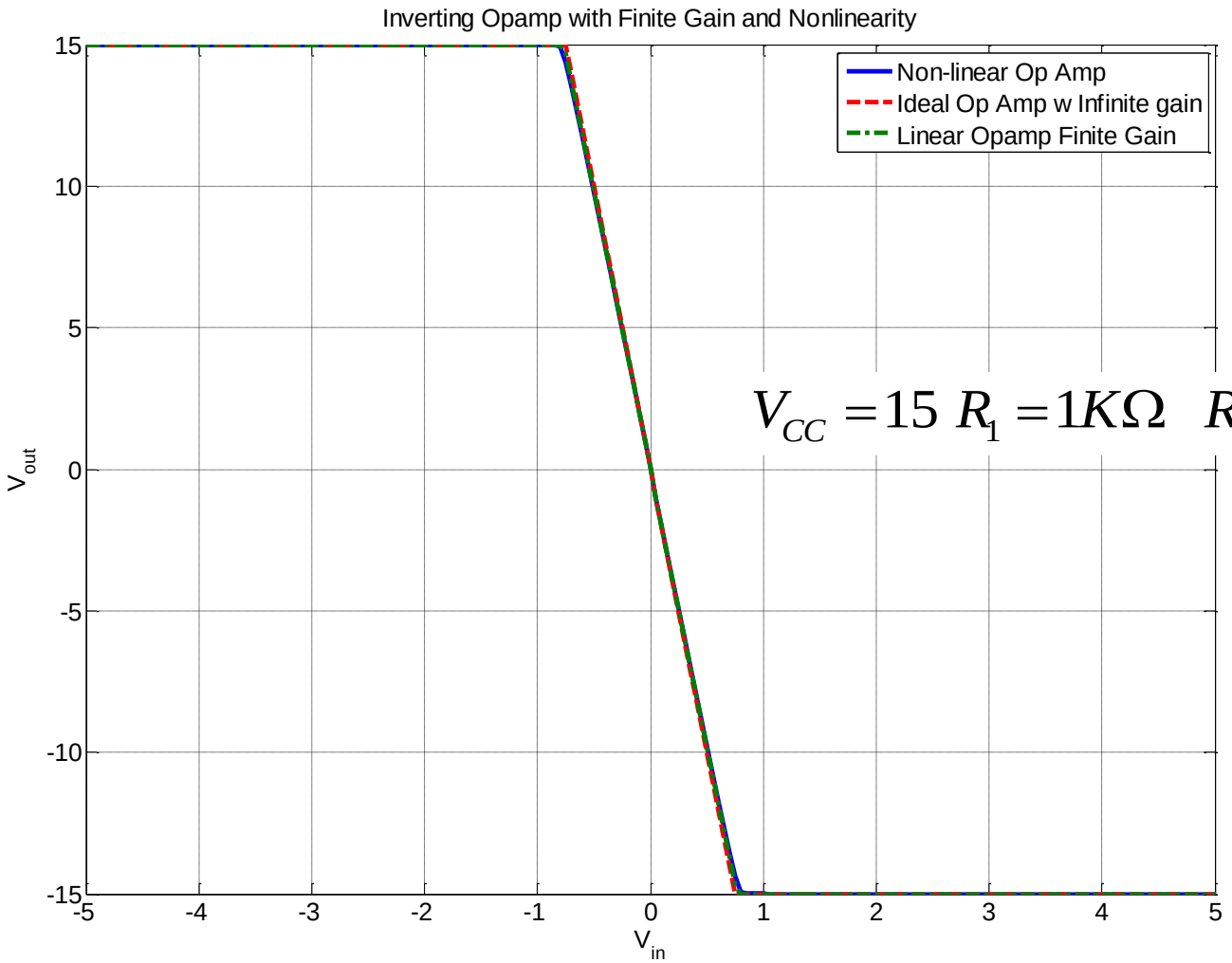

$$V_{CC} = 15 \quad R_1 = 1K\Omega \quad R_2 = 20K\Omega$$

A=10,000

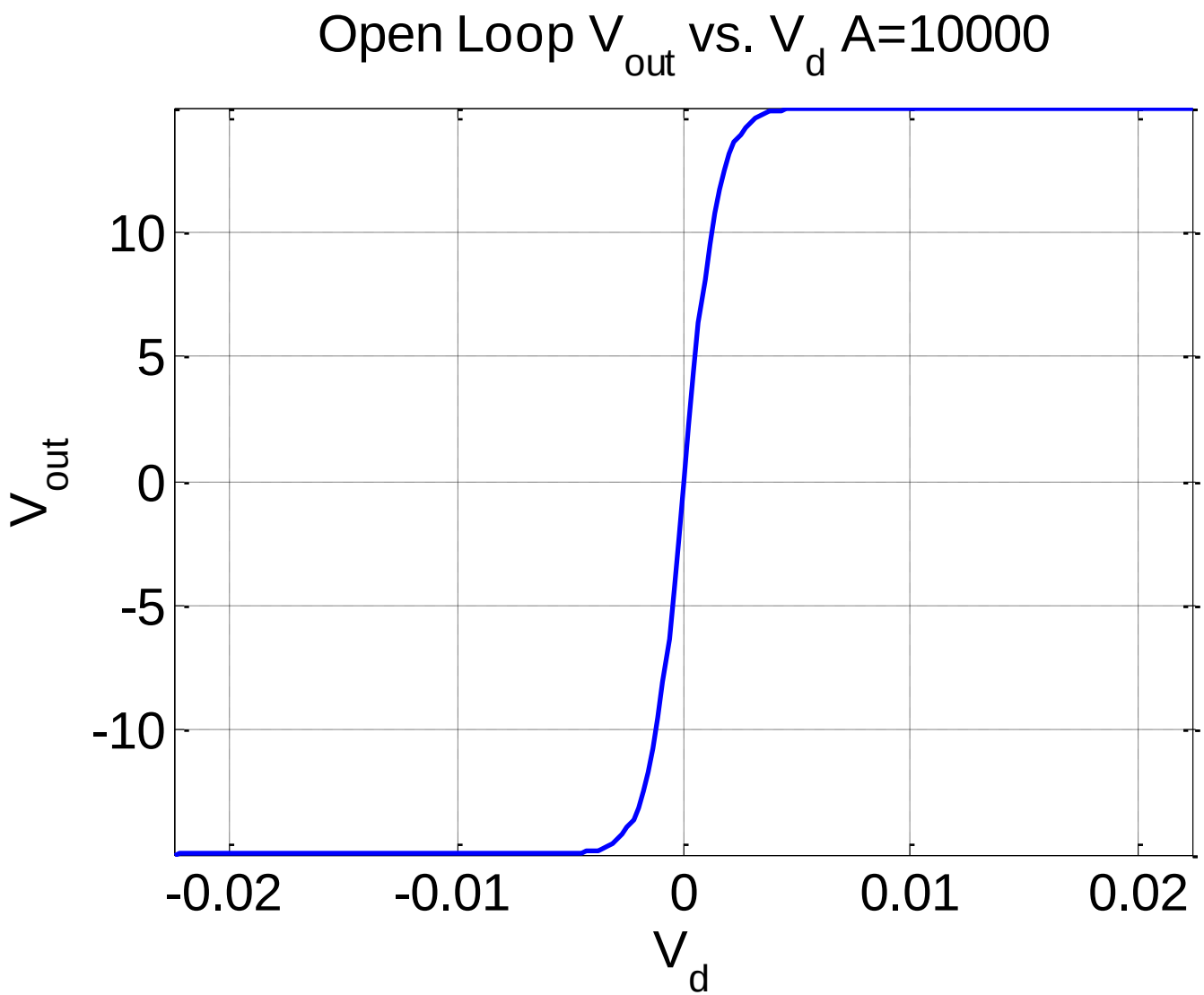

A=10,000

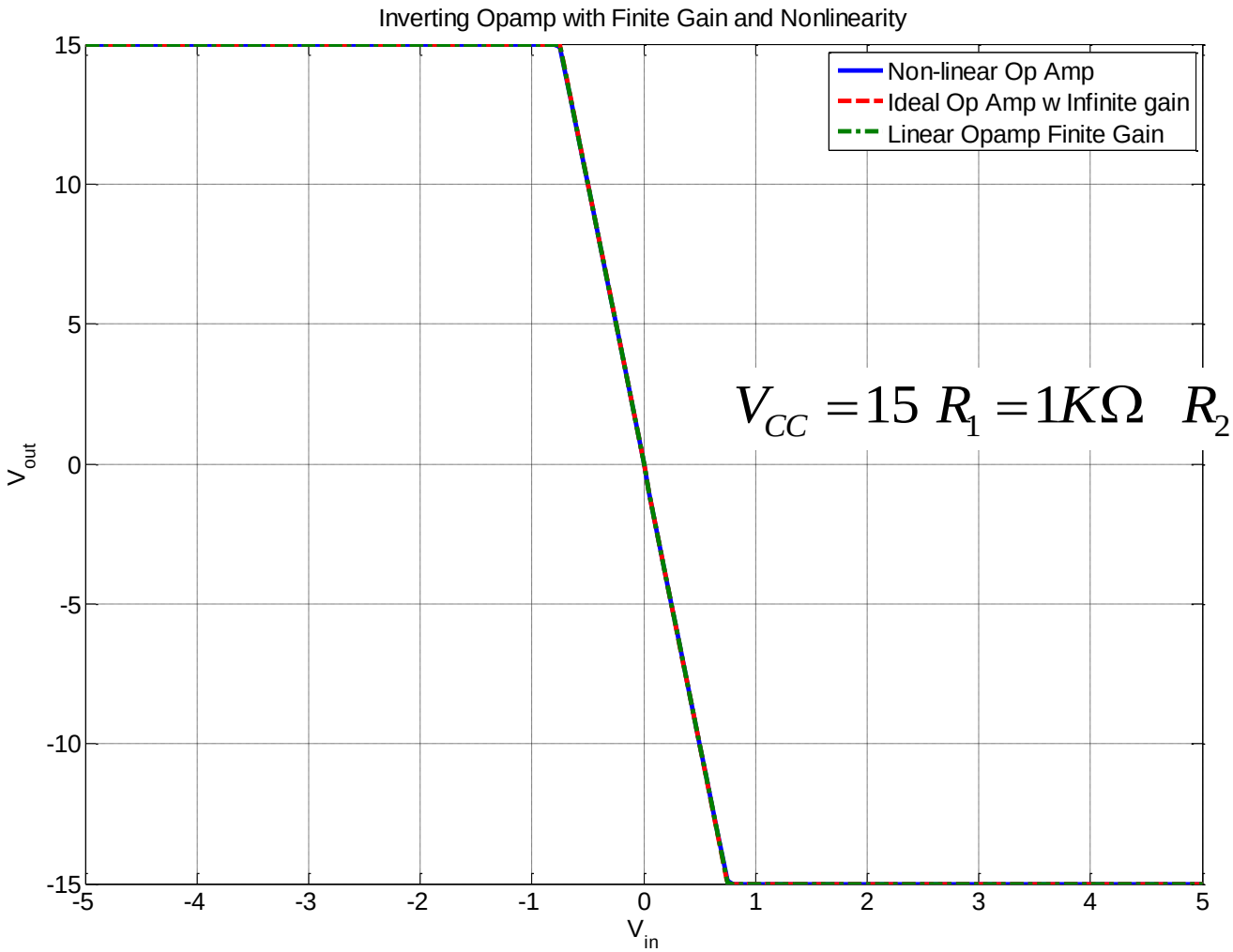

$$V_{CC} = 15 \quad R_1 = 1K\Omega \quad R_2 = 20K\Omega$$

A=10,000

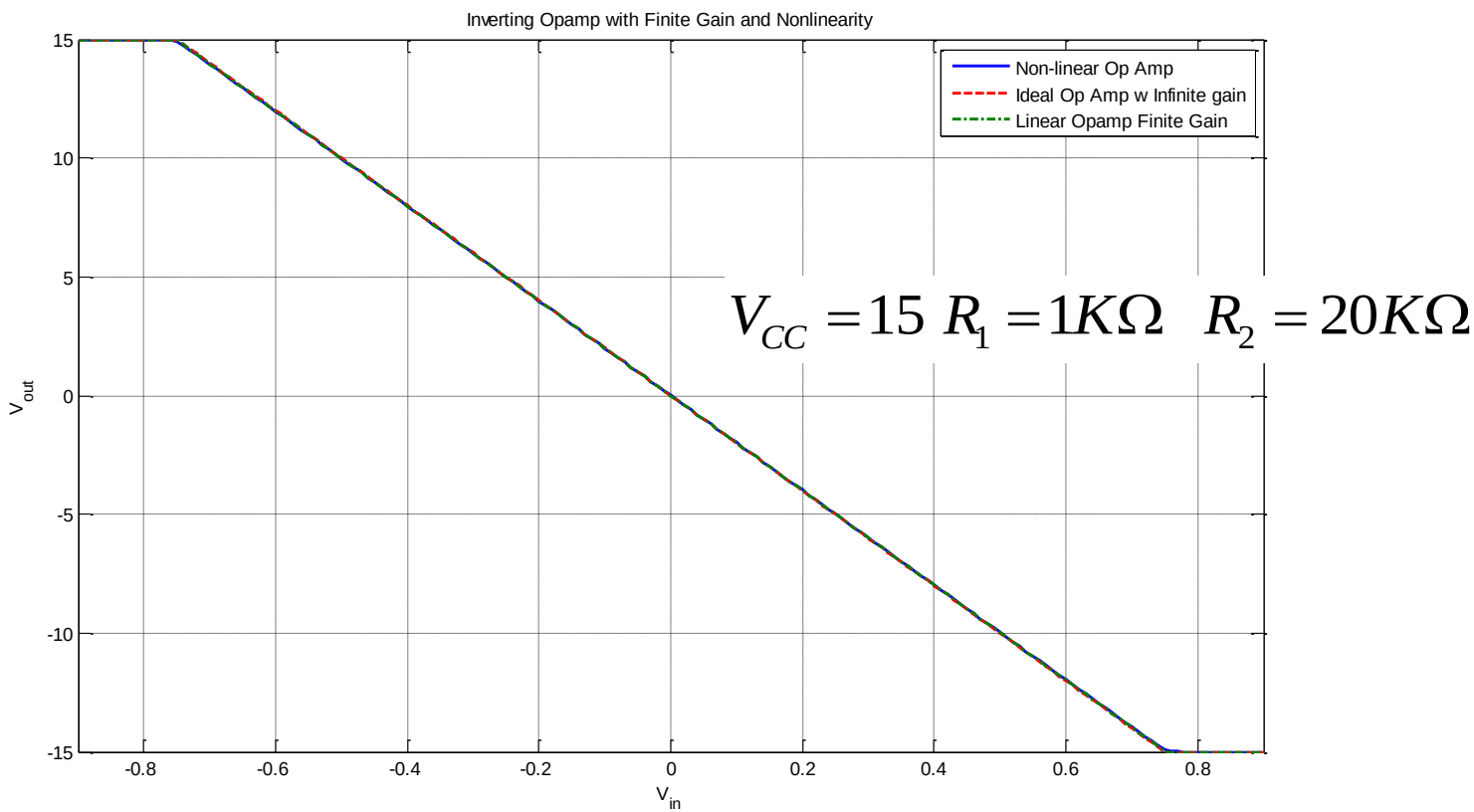
Inverting Opamp with Finite Gain and Nonlinearity
Non-linear Op Amp
Ideal Op Amp w Infinite gain
Linear Opamp Finite Gain
$V_{CC} = 15 \; R_1 = 1K\Omega \quad R_2 = 20K\Omega$
15
10
5
0
-5
-10
-15
V_{out}
-0.8
-0.6
-0.4
-0.2
0
0.2
0.4
0.6
0.8
V_{in}

Harmonic Generation

Suppose

$$V_{out} = f\left(V_{in}\right)$$

$$V_{in}\left(t\right) = v_g \cos\left(2\pi ft\right)$$

$$f\left(V_{in}\right) = AV_{in} \rightarrow V_{out} = Av_g \cos\left(2\pi ft\right) \text{ Linear}$$

$$f\left(V_{in}\right) = BV_{in}^{\ 2} \rightarrow V_{out} = Bv_g \cos^2\left(2\pi ft\right) = \underbrace{\frac{B}{2}}_{DC\,term} + \underbrace{\frac{B}{2}\cos\left(4\pi ft\right)}_{2f\,term}$$

$$f\left(V_{in}\right) = DV_{in}^{\ 3} \rightarrow V_{out} = Dv_g \cos^3\left(2\pi ft\right) = \underbrace{\frac{3B}{4}\cos\left(2\pi ft\right)}_{f\,term-fundamental} + \underbrace{\frac{B}{4}\cos\left(3\pi ft\right)}_{3f\,term}$$

We will see later that for a linear circuit, a input of

$A\cos\left(2\pi ft\right)$ *will always yield an output of* $B\cos\left(2\pi ft + \phi\right)$.

There is no change in frequency, no harmonic generation, no mixing

A=10 Circuit $A_V \approx -6.45$

$V_{out}(V_{in})$ is an odd function

$$V_{out}(-V_{in}) = -V_{out}(V_{in})$$

Taylor Expansion Has Only Odd Powers of V_{in}

$$V_{out}(V_{in}) = a_1 V_{in} + a_3 V_{in}^3 + a_5 V_{in}^5 + a_7 V_{in}^7 + \ldots$$

If $V_{in}(t) = \cos\left[2\pi\left(f_0 t\right)\right]$, then

$$V_{out}(t) = G_1 \cos\left[2\pi\left(f_0 t\right)\right] + G_3 \cos\left[2\pi\left(3 f_0 t\right)\right] + G_5 \cos\left[2\pi\left(5 f_0 t\right)\right] + G_7 \cos\left[2\pi\left(7 f_0 t\right)\right] + \ldots$$

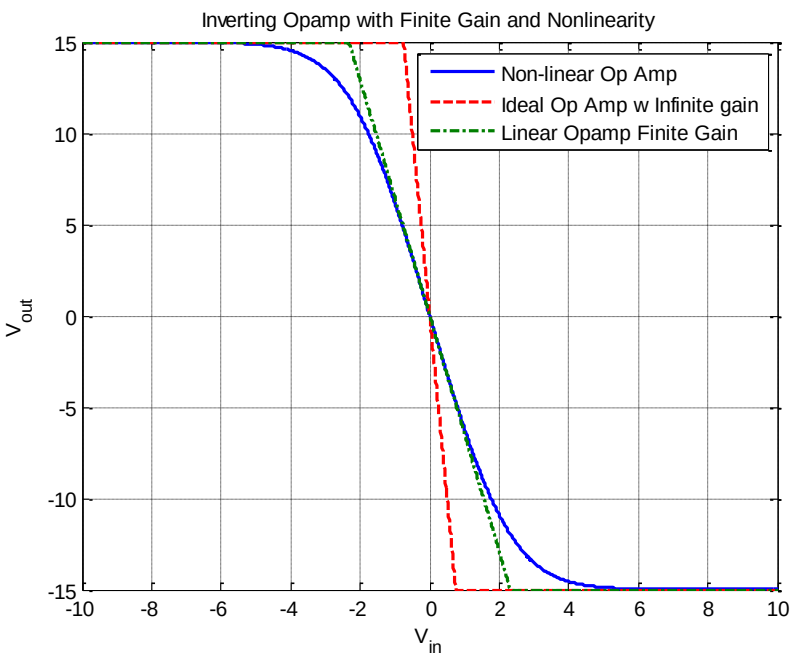

A=10,000 with 0.5V 1KHz Input

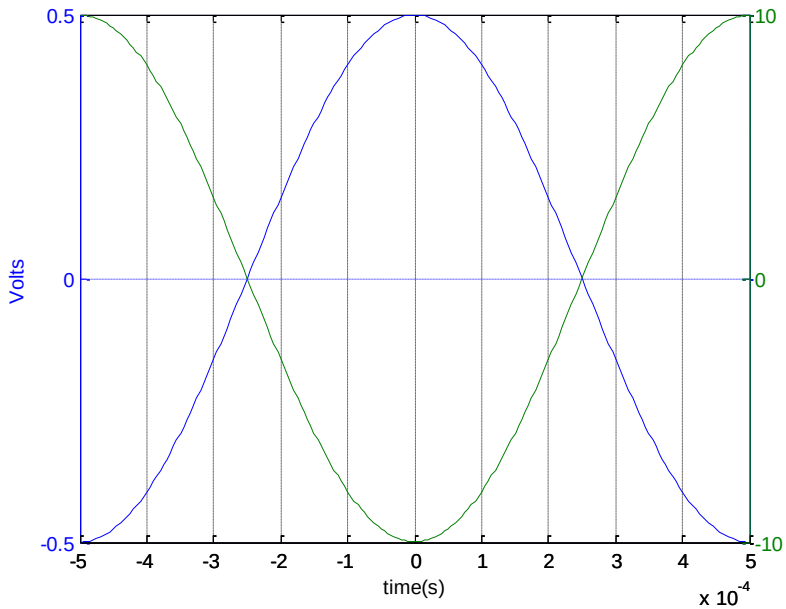

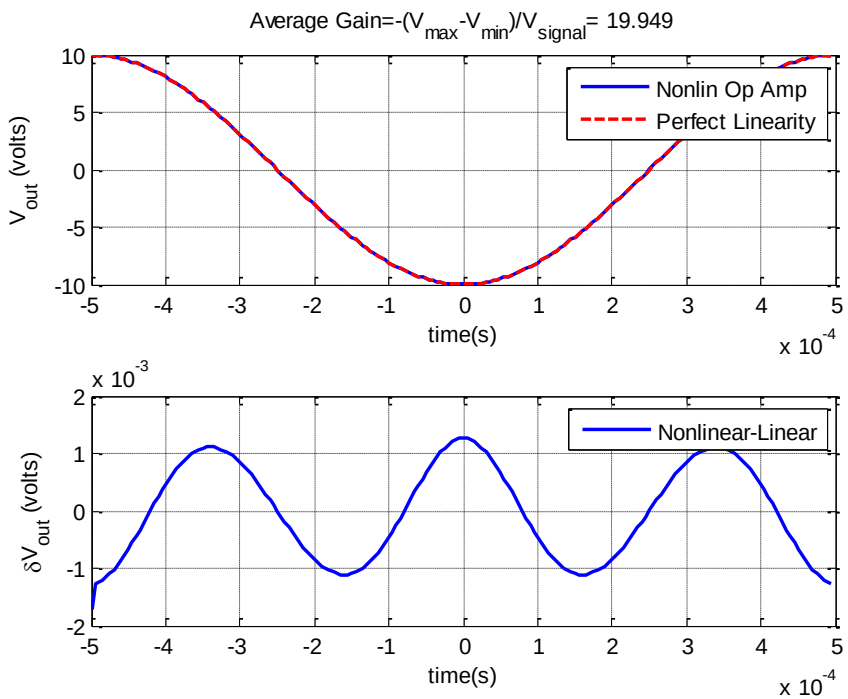

$$V_{in} = (0.5V)\cos(2\pi ft) \quad f = 1000Hz$$

$$Visible\ Distortion\ Period\ T \sim 0.3ms$$

$$3rd\ Harmonic\ 3f = 3kHz \quad T = 1/(3f) \approx 0.333ms$$

A=10,000 with 0.5V 1KHz Input

$$dbV = 20\log_{10}\left(\frac{\left|V_{out,f}\right|}{\left|V_{in}\right|}\right)$$

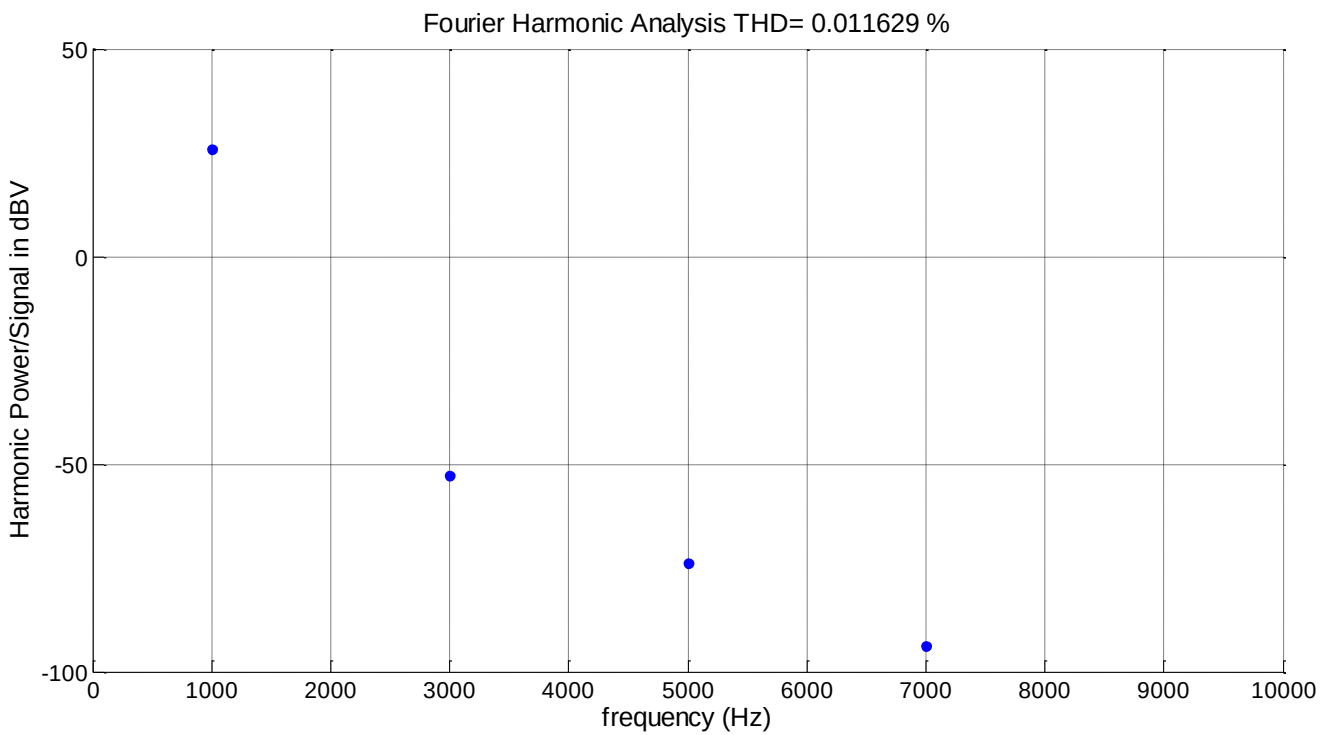

A=10,000 with 0.5V 1KHz Input

$$dbV = 20\log_{10}\left(\frac{|V_{out,f}|}{|V_{in}|}\right)$$

Frequency	|Gain| dB	|Gain|
1000 Hz (fundamental)	+ 25.9997dB	19.9520
3000 Hz (3rd harmonic)	-52.7222dB	2.3115×10^{-3}
5000 Hz (5th harmonic)	-73.9748dB	2.0010×10^{-4}
7000 Hz (7th harmonic)	-93.7229dB	2.0010×10^{-5}

Major Points of This Section

- KCL & KVL Still Apply for Non-linear Cases
- Circuit "Tricks" Such As Negative Feedback Can Improve Linearity Even When Real Elements Have Non-linearities
- Non-linearities lead to harmonic generation/distortion