SUPERHETERODYNE RECEIVER

Credit to J. Guo, J. Phillips

Fred Terry
Fall, 2013

Introduction: Circuits Examples

Microprocessor

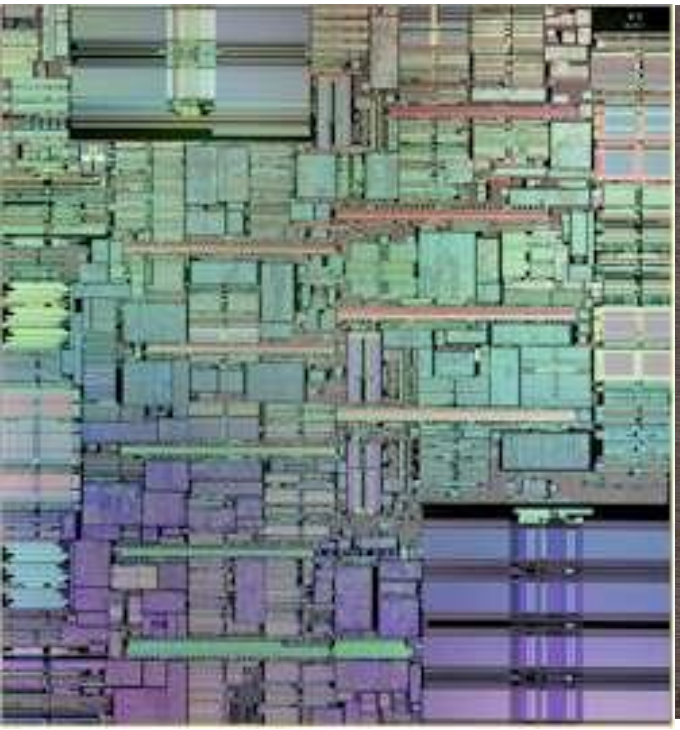

Home-built radio

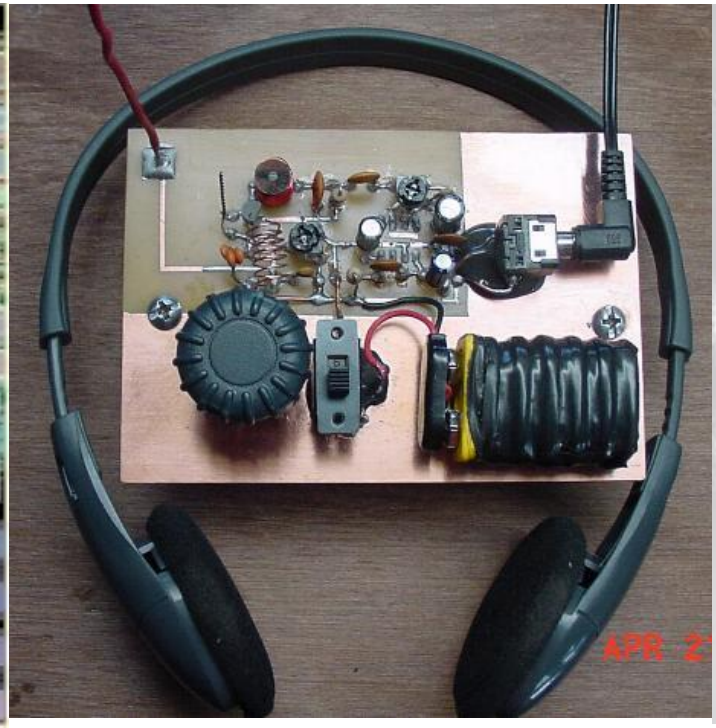

Mobile phone

- We will examine some important aspects of different passive and active circuit elements used in analog and digital electronics.
- If you want to become expert circuit designer go to EECS 311, 312, etc.

Introduction: Where do we start?

Circuit analysis:

Examine a circuit, how does it work?

EECS 215 – the beginning

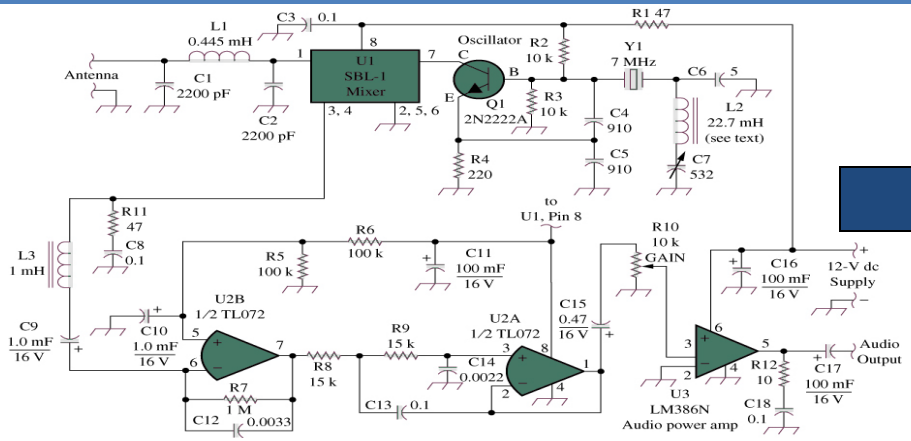

Circuit design:

Given a function, how do you accomplish with a circuit?

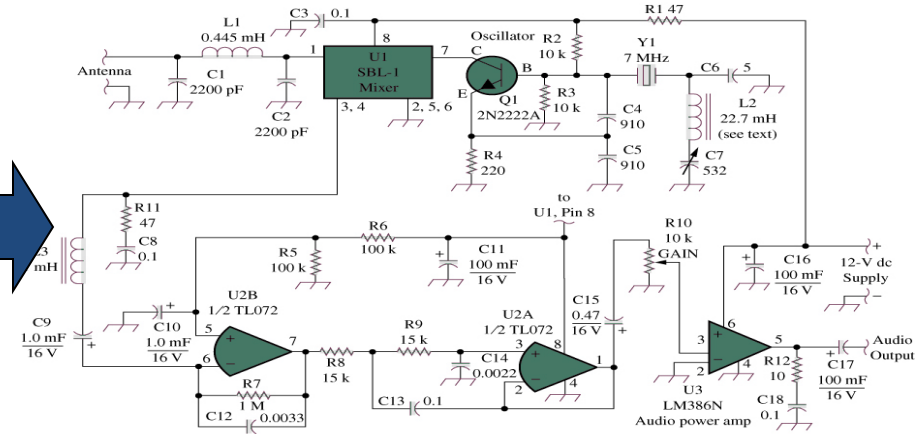

Chapter 1: Circuit Terminology

- Electronics
  - Devices – active vs. passive
  - Circuits
  - Systems

Analysis vs. Synthesis

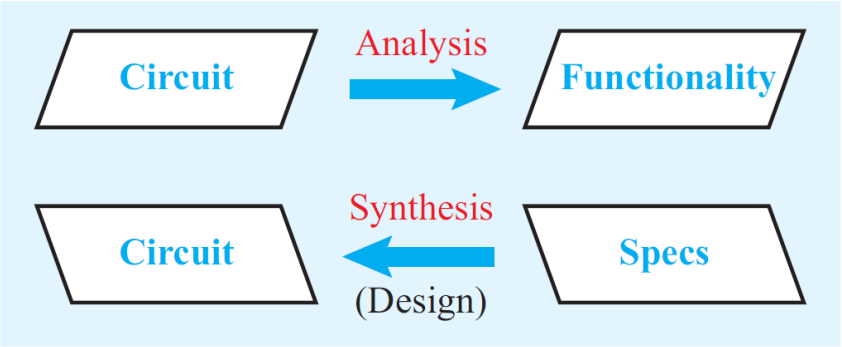

Cell-Phone Architecture

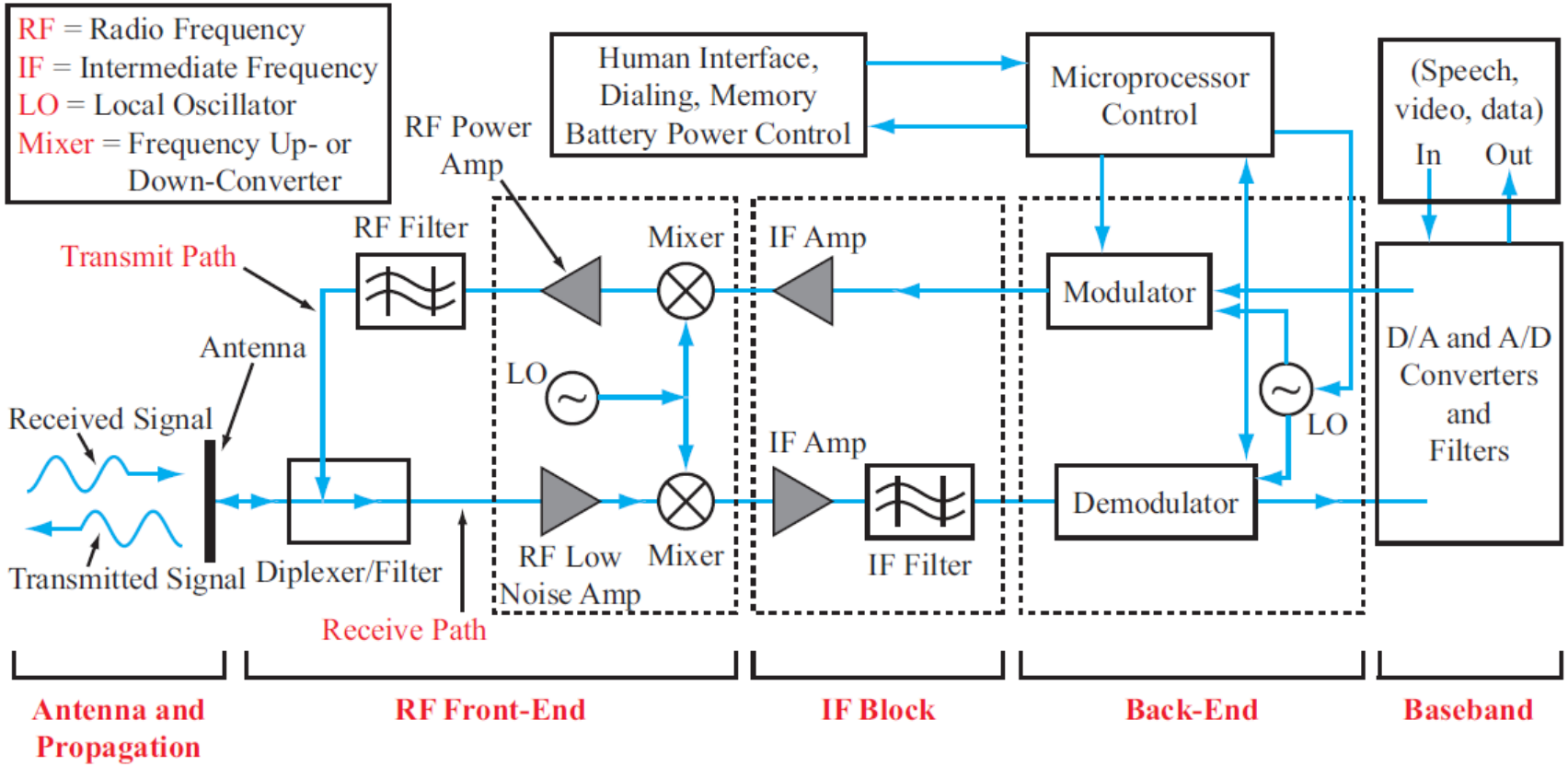

Outline

- Brief Look At AM Communications
- How Does An AM Receiver Work?
- What Is Challenging and Why the Superhet Idea Was Brilliant
- What Pieces of this will we master by the end of EECS 215?
- Where Can You Get the Rest?

Basic Problem: Communicating Information over long distances

- Example: Voice/Audio
  - You can't shout far enough
  - Everyone would hear
- Key Ideas:
  - Convert sound information to electromagnetic waves
  - Shift to higher frequencies
    - At the right frequencies, EM waves are not absorbed by air, water, plants, animals, etc.
- EE Challenges
  - Conversion/Frequency Shift (modulation)
  - Amplification & Transmission
  - Detection, Filtering, Demodulation

AM

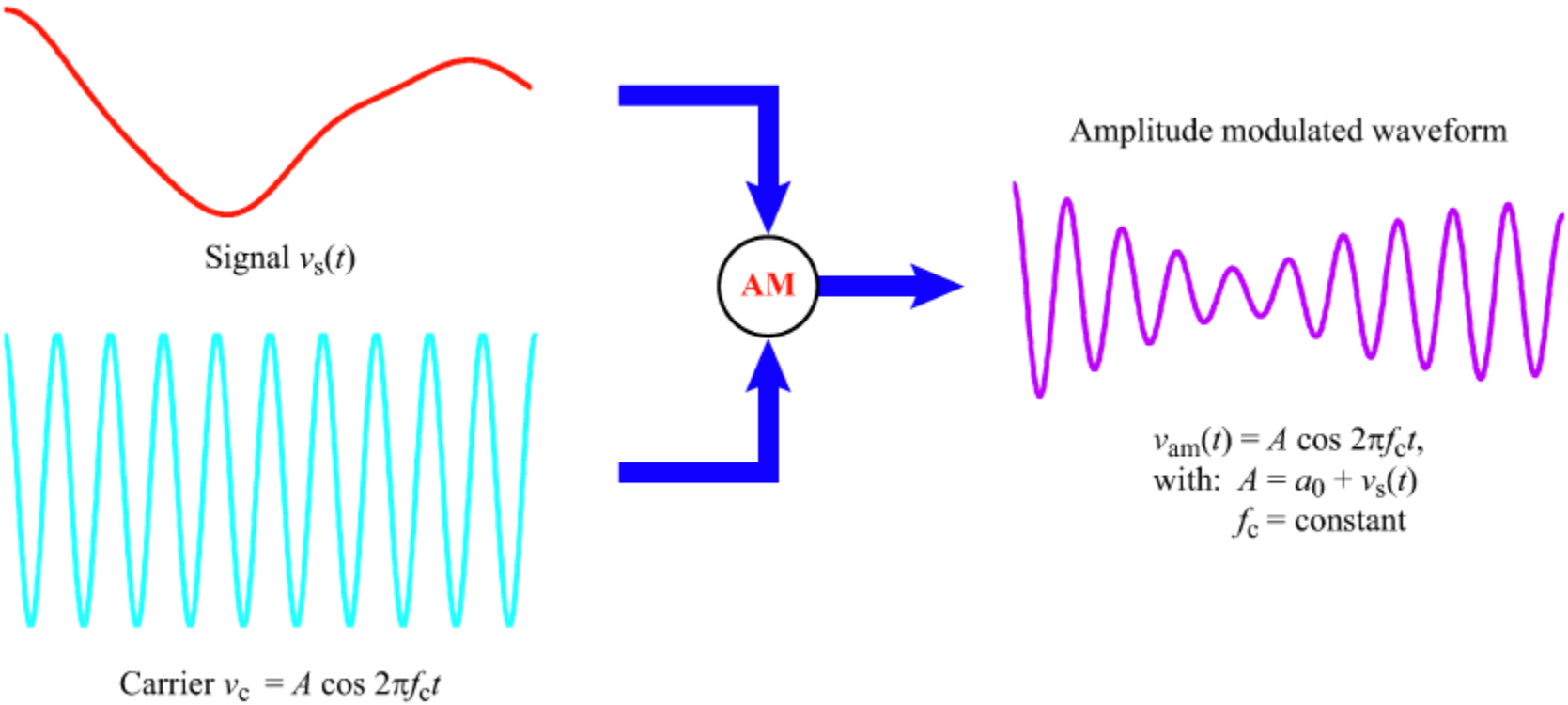
Signal $v_s(t)$
AM
Amplitude modulated waveform
$v_{am}(t) = A \cos 2\pi f_c t$,
with: $A = a_0 + v_s(t)$
f_c = constant
Carrier $v_c = A \cos 2\pi f_c t$

(a) AM

AM Signal Math

$$
\begin{aligned}
v_{in}(t) &= A(t)\cos(2\pi f_c t) \\
&= \left(1 + m\cos\left(2\pi f_{sig} t\right)\right)\cos(2\pi f_c t) \\
&= \cos(2\pi f_c t) + m\cos\left(2\pi f_{sig} t\right)\cos(2\pi f_c t) \\
&= \underbrace{\cos(2\pi f_c t)}_{carrier} + \underbrace{\frac{m}{2}\cos\left(2\pi\left(f_c - f_{sig}\right)t\right)}_{lower\ sideband} + \underbrace{\frac{m}{2}\cos\left(2\pi\left(f_c + f_{sig}\right)t\right)}_{upper\ sideband}
\end{aligned}
$$

$typically:$

$$f_{sig} \ll f_c$$

AM Example

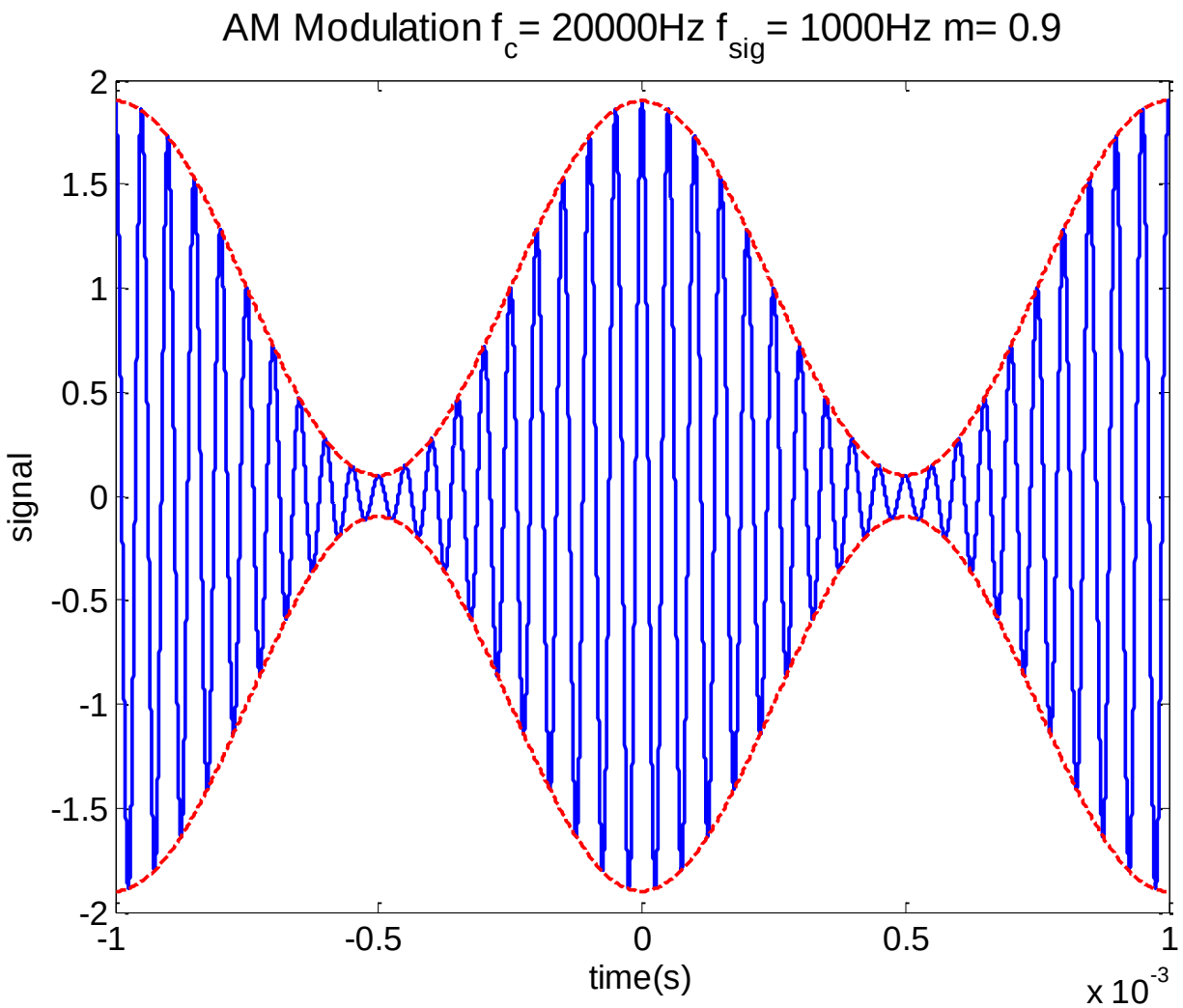
AM Modulation f_c= 20000Hz f_{sig}= 1000Hz m= 0.9
signal
time(s)
x 10^{-3}
2
1.5
1
0.5
0
-0.5
-1
-1.5
-2
-1
-0.5
0
0.5
1

Basic Concept of Receiver

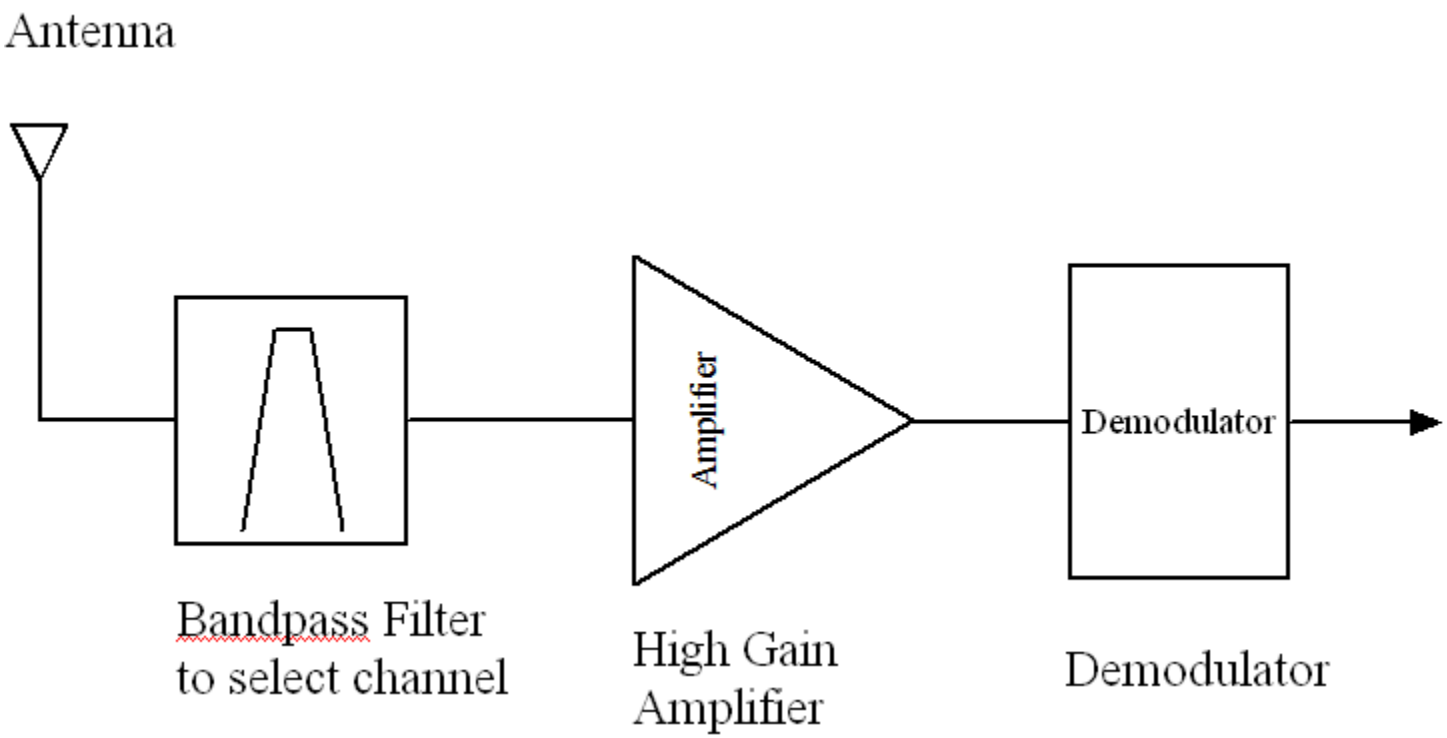

Simple Demodulator: Diode&LPF

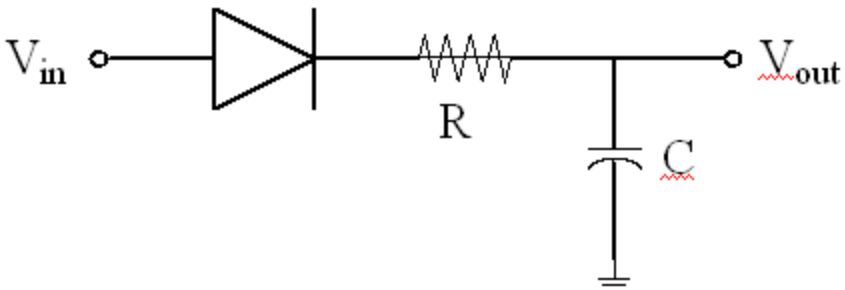

$$\frac{1}{f_c} \ll RC \ll \frac{1}{f_{sig}}$$

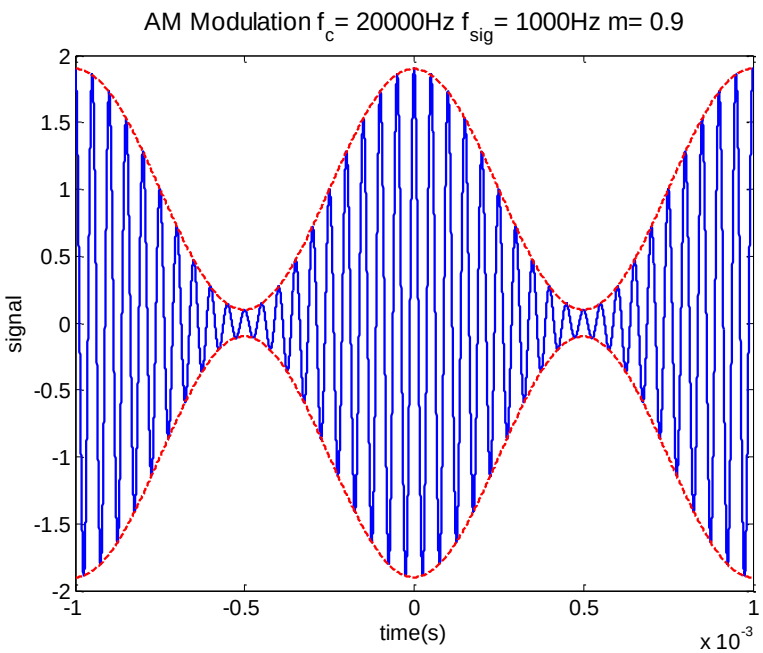

Follow with Blocking Capacitor to Remove DC

AM Band

- 520-1610 KHz in US
- 10 KHz Channel Spacing
- Need Flat-Top Narrow (10KHZ Bandwidth) Filter to Select Station
  - Why Flat-Top?
- Gain Control Issue

What is Hard?

- It is very difficult to design a good bandpass filter with a widely tunable center frequency
- A brilliant but relatively simple idea solved this problem
- The idea (called heterodyning) is to use “mixing” to shift the signal to a fixed center frequency (called the intermediate frequency or IF) and build our bandpass filter at this IF frequency

Abbreviated History

- The Superhet Receiver was one of the great inventions of early electronics
- It's origin trace to the early 1900's but is still a critical component of modern communications
- While other had the basic idea, it was first made practical in 1918 by U.S. Army Major Edwin Armstrong in France during World War I
- A "heterodyne" refers to a beat or "difference" frequency produced when two or more radio frequency carrier waves are fed to a detector. The term was coined by Canadian Engineer Reginald Fessenden describing his proposed method of producing an audible signal from the Morse Code transmissions of an Alexanderson alternator-type transmitter (spark-gap transmitter).

Superheterodyne Topology

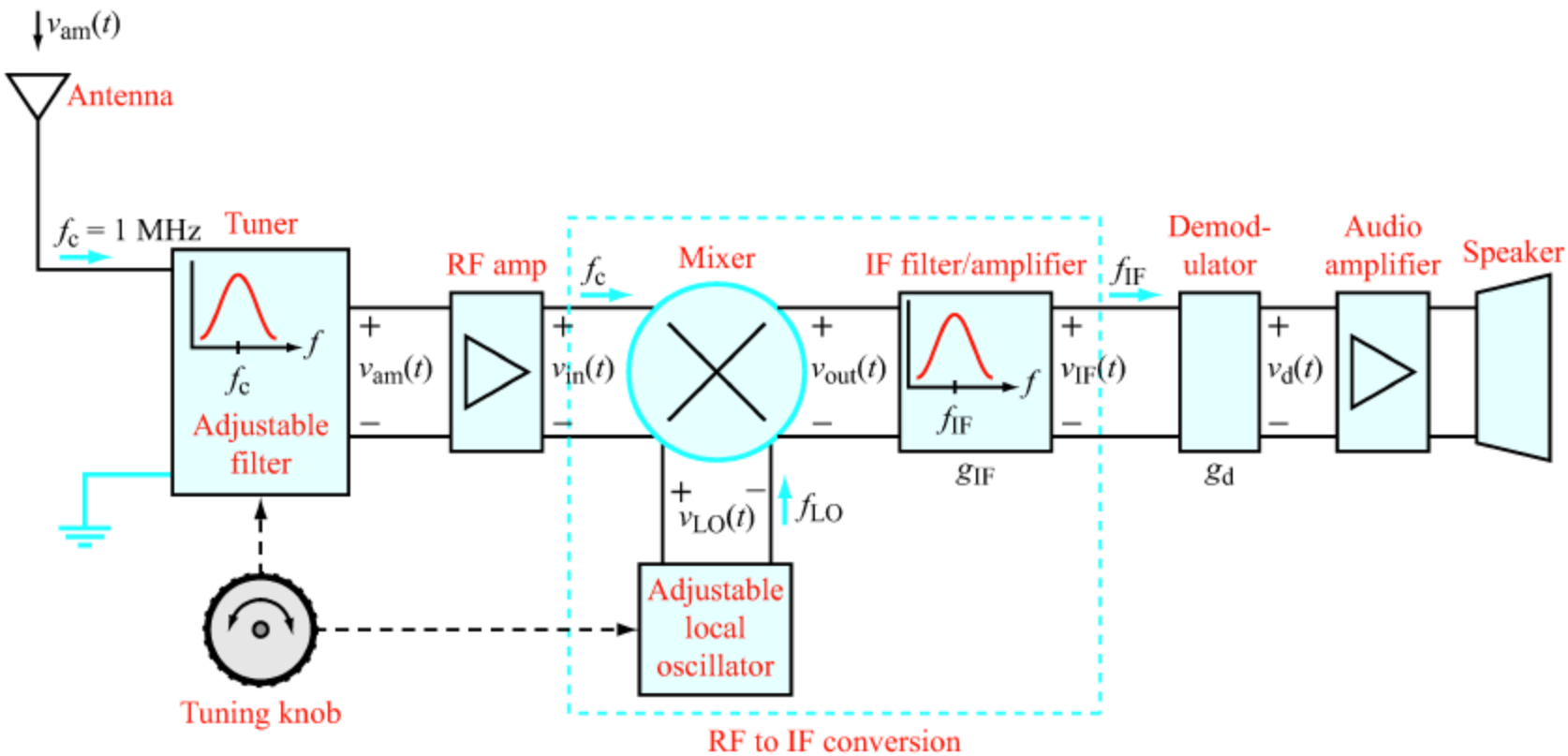

Figure 9-30: Block diagram of superheterodyne receiver.

Mixer Math

- A Mixer Is Just A Multiplier Circuit
  - Even A Diode Can Act As A Mixer
  - Clever Transistor Circuits

$$v_{out} = A(t)\cos(2\pi f_c t)\, A_{LO}\cos(2\pi f_{LO} t)$$

$$= \frac{1}{2} A(t) A_{LO}\left[\cos\left(2\pi\left(f_c - f_{LO}\right)t\right) + \cos\left(2\pi\left(f_c + f_{LO}\right)t\right)\right]$$

$$set$$

$$\left(f_c - f_{LO}\right) = f_{IF} \text{ constant Intermediate Frequency (455KHz for AM)}$$

Gilbert Cell Mixer

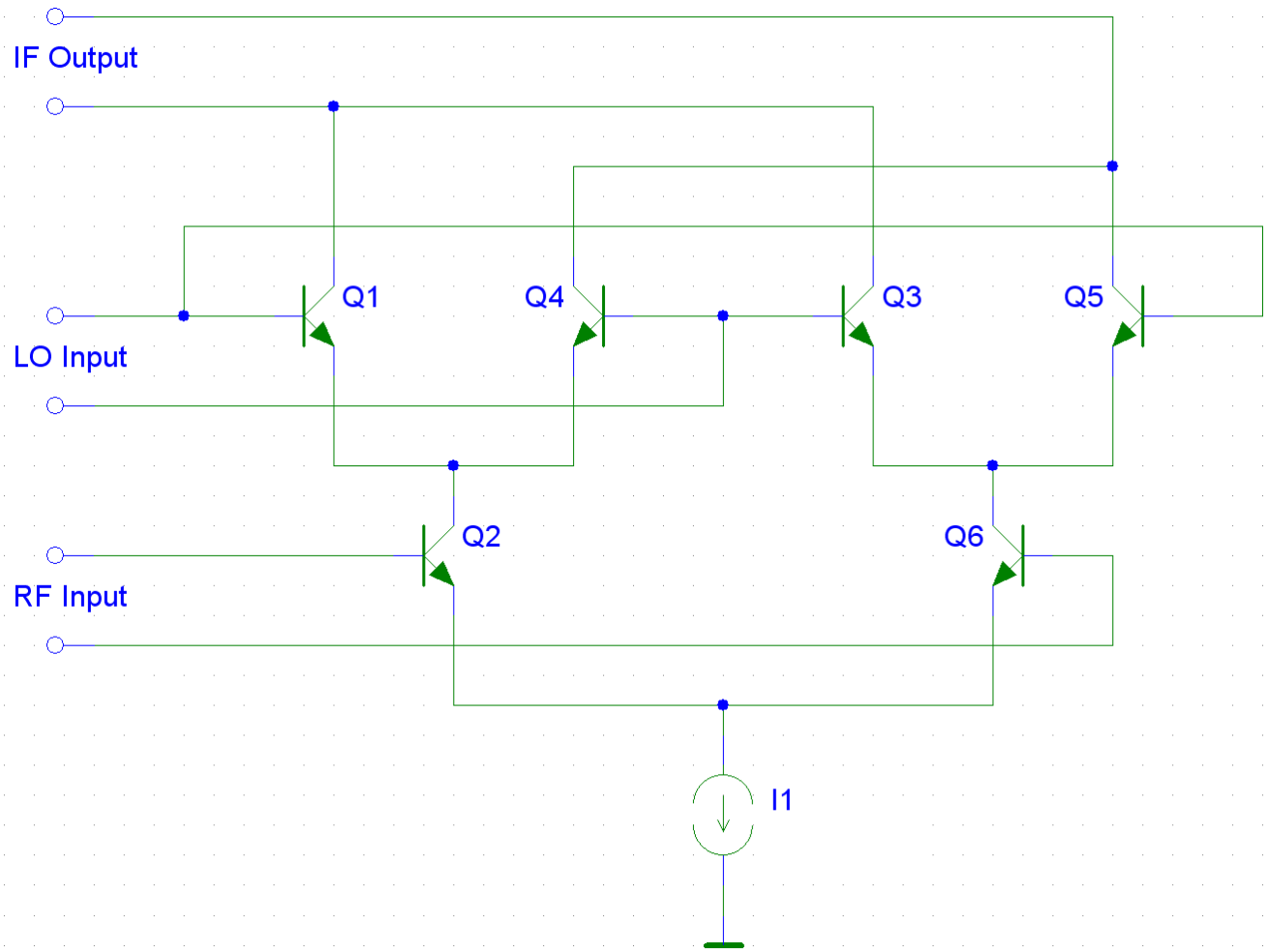

A Key Element Is The IF Filter

- Now we can carefully design the critical bandpass filter exactly at one center frequency (f_{IF})

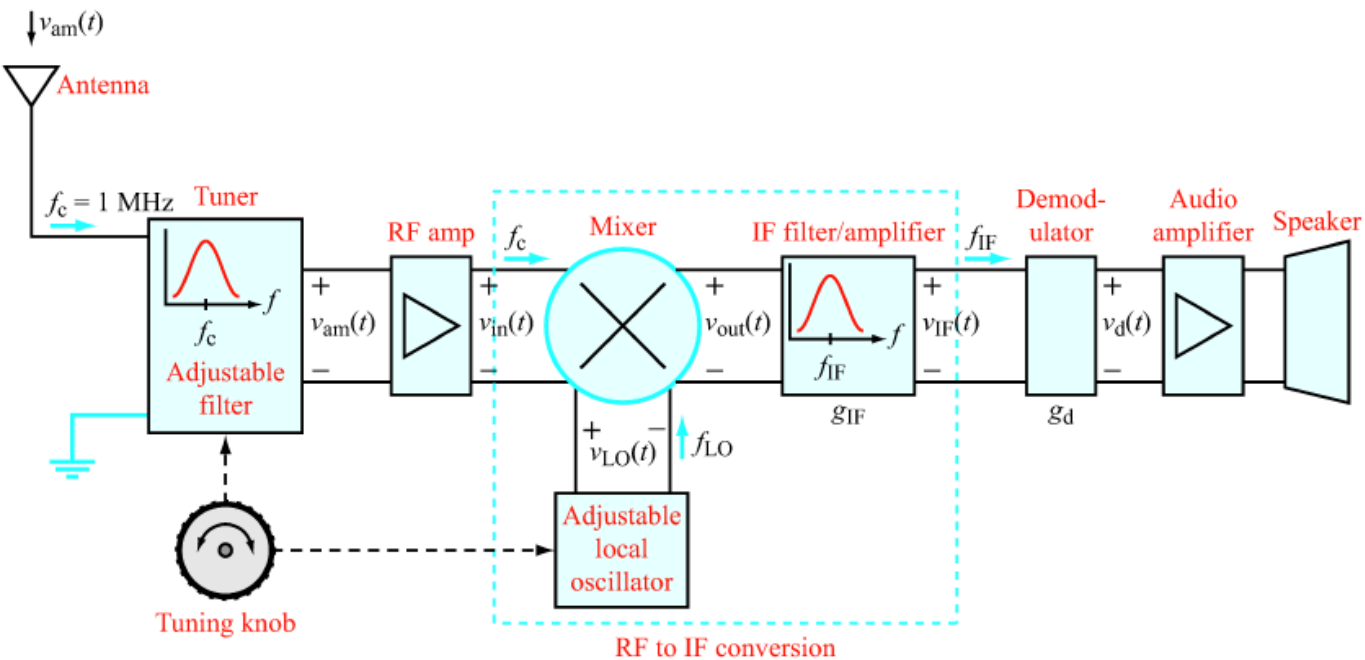

Figure 9-30: Block diagram of superheterodyne receiver.

Example Filter At IF Stage:4th Butterworth Bandpass at 455KHz

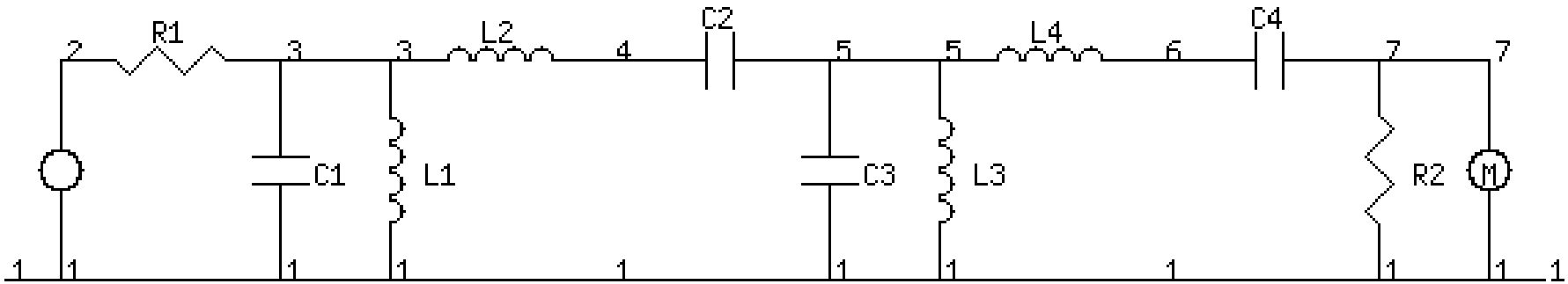

R1	50
C1	2.43634e-07
L1	5.02203e-07
L2	0.00147059
C2	8.32004e-11
C3	5.88237e-07
L3	2.08001e-07
L4	0.000609086
C4	2.00881e-10
R2	50

4th Order Butterworth Bandpass Filter Designed with application from http://www-users.cs.york.ac.uk/~fisher/

Full Transfer Function

$$H(s)=(C_2C_4L_1L_3R_2s_4)/[R_1+(L_1+C_4R_1R_2)s+((C_1L_1+(C_3+C_4)L_3+C_2(L_1+L_2+L_3)+C_4L_4)R_1+C_4L_1R_2)s^2+(L_1(C_3L_3+C_2(L_2+L_3)+C_4(L_3+L_4))+C_4(C_1L_1+C_3L_3+C_2(L_1+L_2+L_3))R_1R_2)s^3+((C_2(C_3+C_4)(L_1+L_2)L_3+C_3C_4L_3L_4+C_2C_4(L_1+L_2+L_3)L_4+C_1L_1((C_3+C_4)L_3+C_2(L_2+L_3)+C_4L_4))R_1+C_4L_1(C_3L_3+C_2(L_2+L_3))R_2)s^4+(C_2L_1((C_3+C_4)L_2L_3+C_4(L_2+L_3)L_4)+C_2C_4(C_3(L_1+L_2)L_3+C_1L_1(L_2+L_3))R_1R_2+C_3C_4L_1L_3(L_4+C_1R_1R_2))s^5+(C_1L_1(C_2(C_3+C_4)L_2L_3+C_3C_4L_3L_4+C_2C_4(L_2+L_3)L_4)R_1+C_2C_3C_4L_3((L_1+L_2)L_4R_1+L_1L_2R_2))s^6+C_2C_3C_4L_1L_2L_3(L_4+C_1R_1R_2)s^7+C_1C_2C_3C_4L_1L_2L_3L_4R_1s^8]$$

Bode Plot

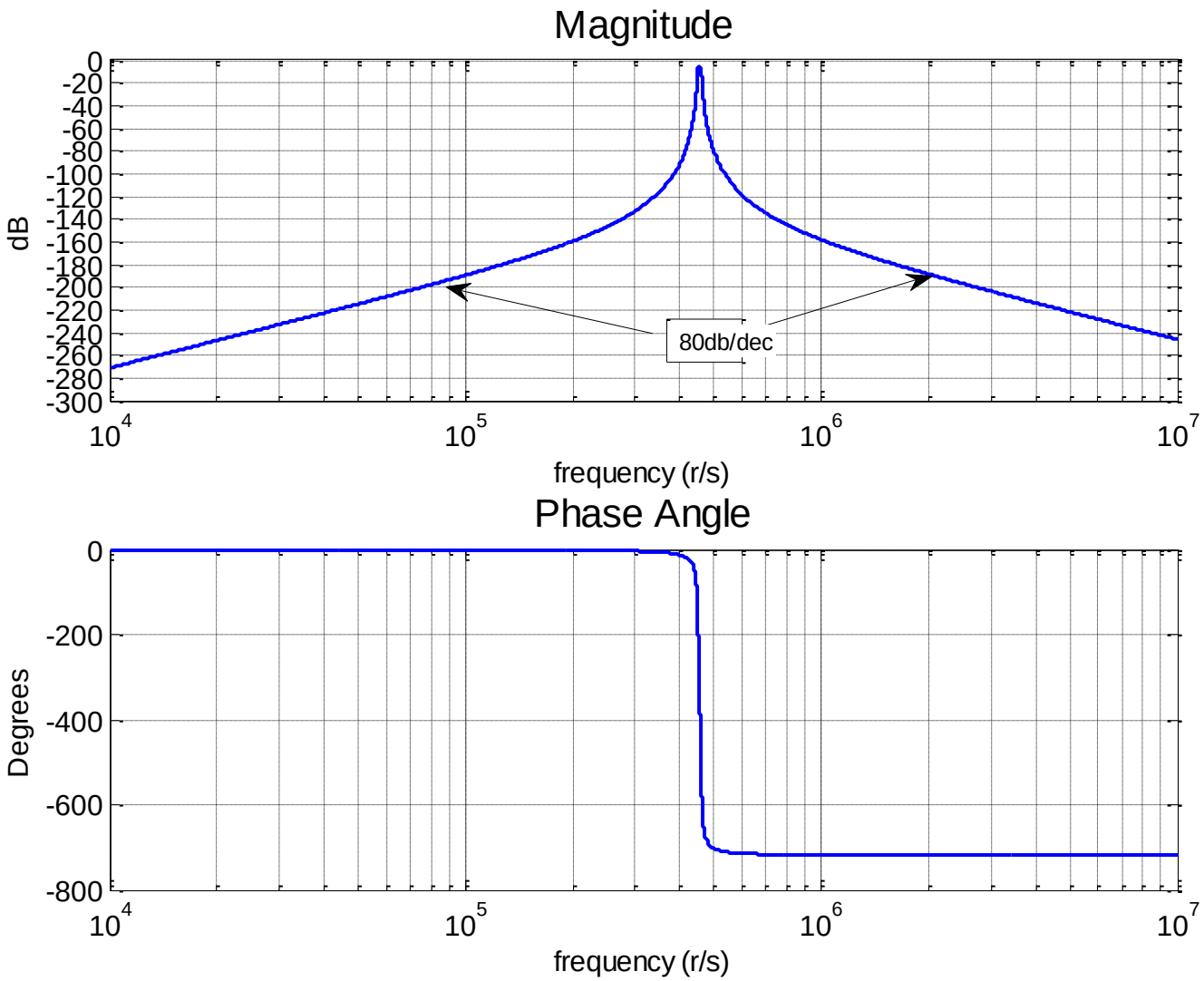
Magnitude
dB
0
-20
-40
-60
-80
-100
-120
-140
-160
-180
-200
-220
-240
-260
-280
-300
80db/dec
10^4
10^5
10^6
10^7
frequency (r/s)
Phase Angle
Degrees
0
-200
-400
-600
-800
10^4
10^5
10^6
10^7
frequency (r/s)

Bode Plot Magnified

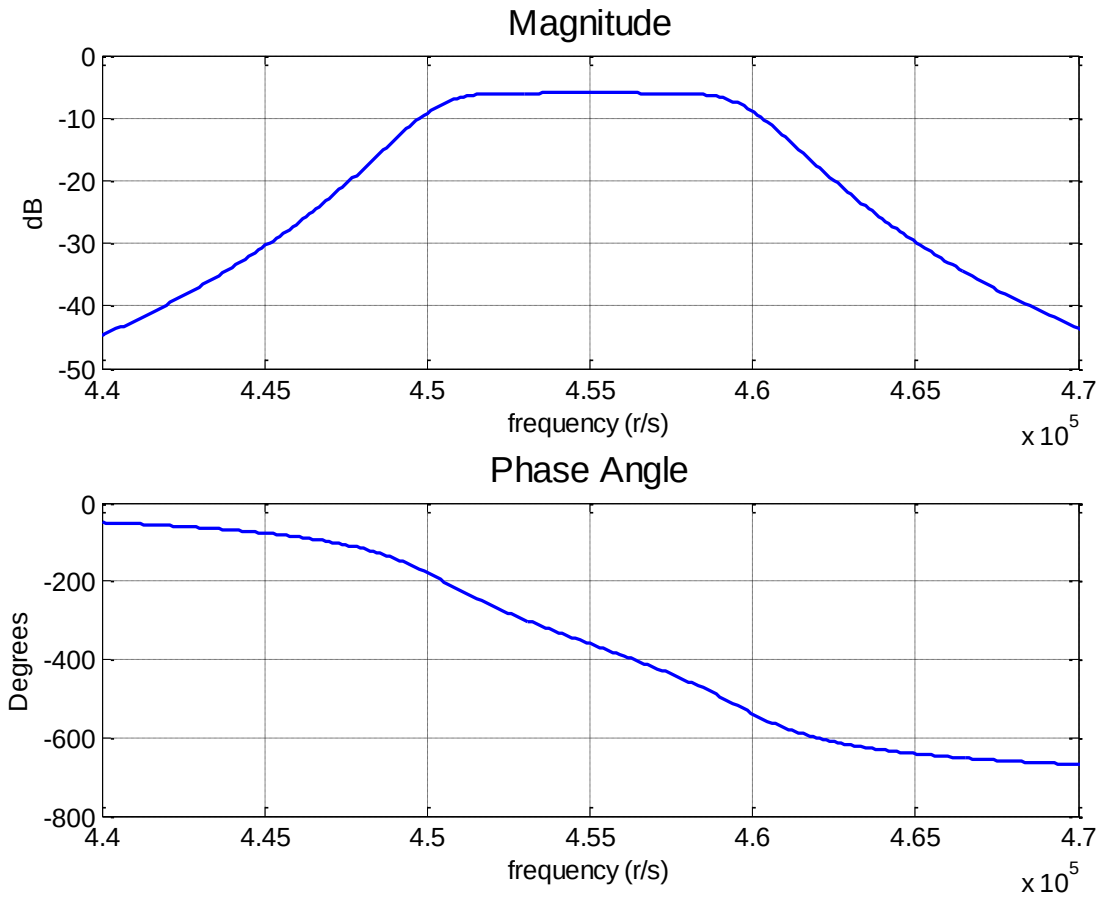

Active IF Filter Design

- Stage 1&2 form a 4th order active high-pass filter
- Stage 3&4 form a 4th order active low pass filter
- Other it is an active Bandpass filter

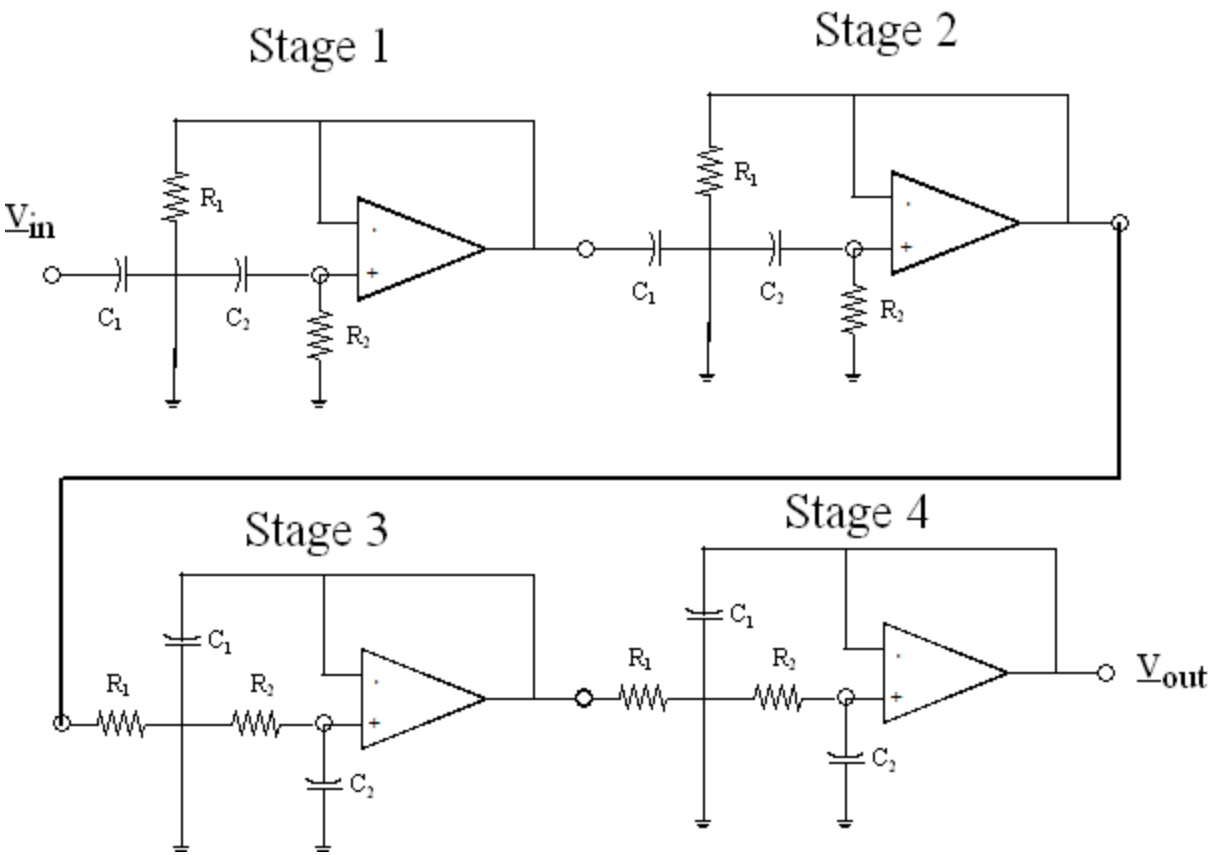

One Set of Components Choices

Stage	R1	R2	C1	C2
1	13535.031847134 Ohms	92511.644903 302 Ohms	10pF	10pF
2	32696.390658174 Ohms	38296.216640 166 Ohms	10pF	10pF
3	10K Ohms	10K Ohms	3.7466799117 505E-11 F	3.1981330393 538E-11 F
4	10K Ohms	10K Ohms	9.0450942525 903E-11 F	1.3247380822 175E-11 F

Automatic Gain Control

- Various Effects Will Lead to Signal Strength Varying with Time
- System to This Point Will Lead Varying Received Signal (Volume)
- How To Correct? Automatic Gain Control (AGC)

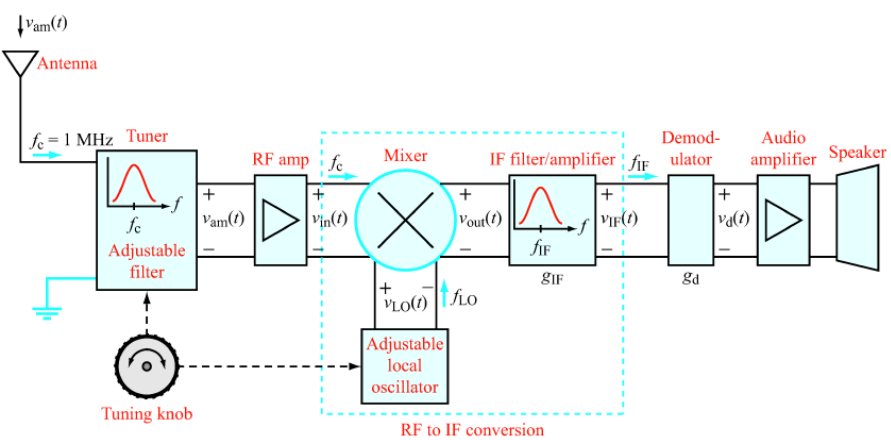

Figure 9-30: Block diagram of superheterodyne receiver.

AGC: One Approach

- High Q filter in IF Stage to Measure Carrier Strength (a_0)
- Adjust IF Amp Gain to Maintain Desired Level

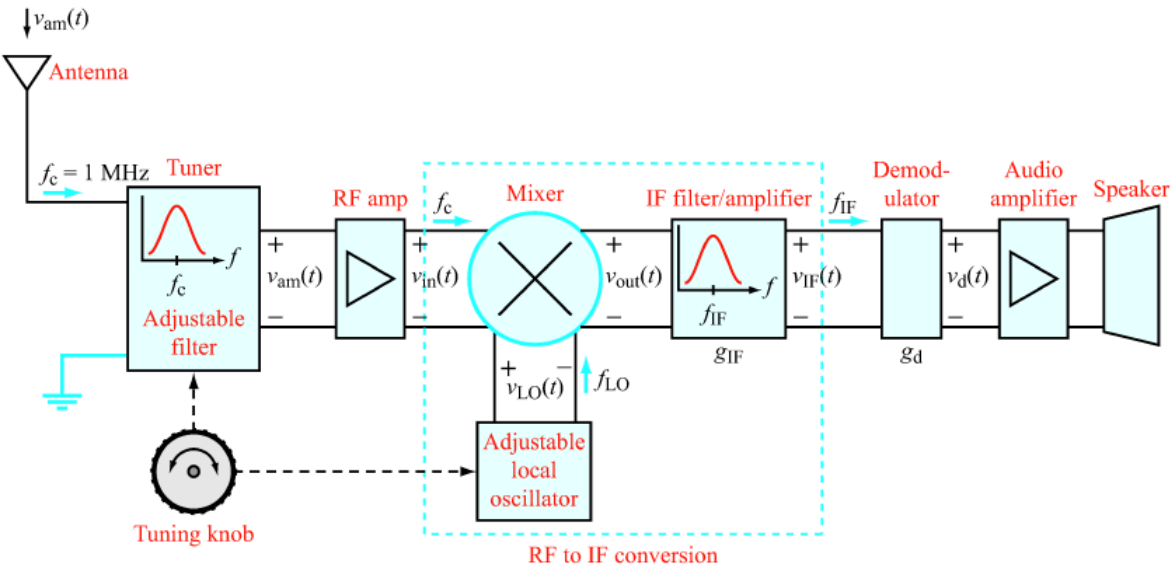

Figure 9-30: Block diagram of superheterodyne receiver.