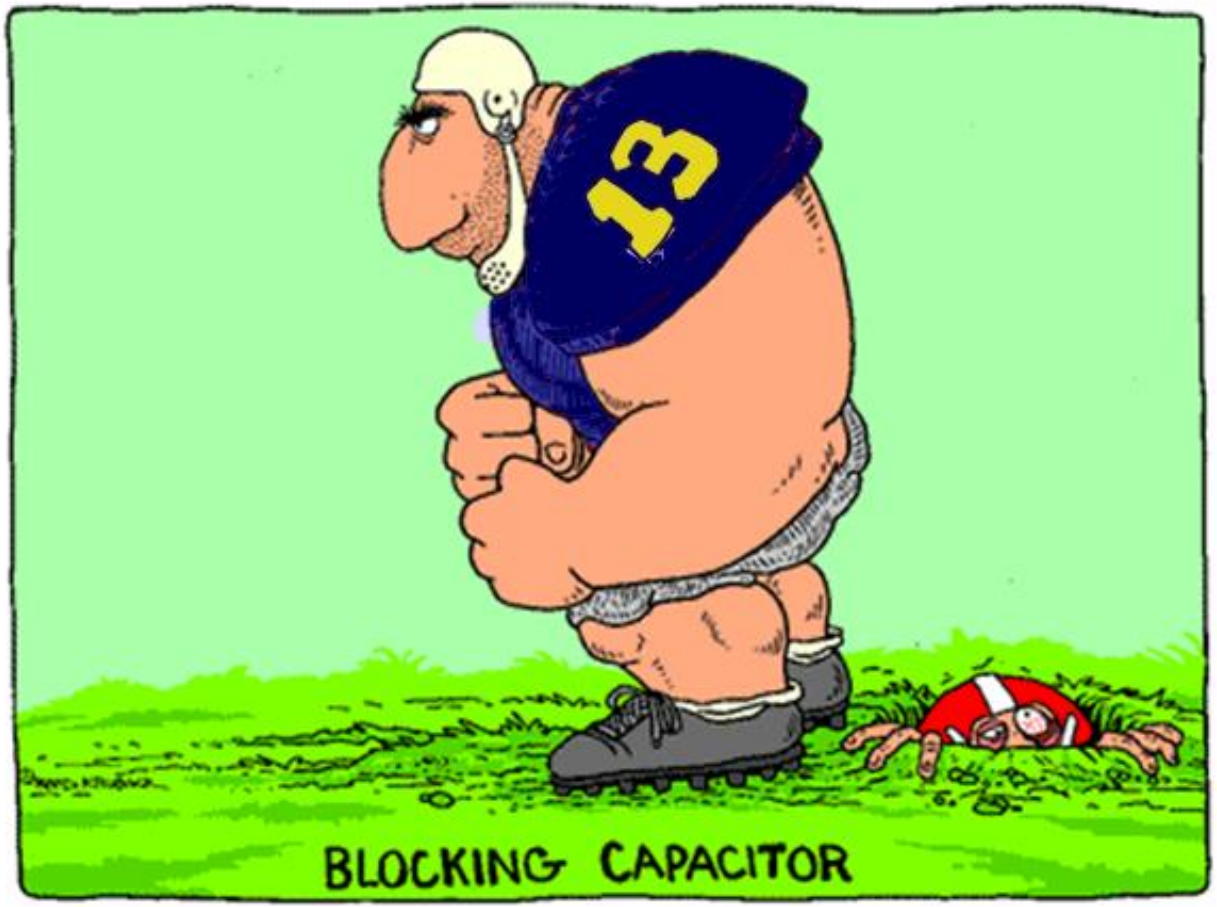

FIRST ORDER CIRCUITS

© Fred Terry
Fall, 2013

First Order Circuits

- Only One Energy Storage Element (one L or one C)
- Resistors, Independent and Dependent Sources
- Result with be a First Order Ordinary, Linear Differential Equation in t
  - First Order since we have one circuit element with with a d/dt element constraint

First Order Ordinary *Linear*, Differential Equations: The Short Story I

Differential Equations of the form:

$$\frac{\mathrm{dy}}{\mathrm{dx}} + P(x)y = Q(x)$$

where $P(x)$, $Q(x)$ are functions of x only (possibly even constants).

The GENERAL solution is made up of a particular solution $y_p(x)$ which solves the total equation and a homogeneous solution $y_h(x)$ which solves the homogeneous equation:

$$\frac{\mathrm{dy}}{\mathrm{dx}} + P(x)y = 0$$

So the full, general solution is:

$$y(x) = y_p(x) + y_h(x)$$

First Order Ordinary *Linear*, Differential Equations: The Short Story II

The homogeneous solution $y_h(x)$ to a 1st order, linear ODE will always have exactly 1 unknown constant, so the general solution:

$$y(x) = y_p(x) + y_h(x)$$

will also always have exactly 1 unknown constant.

We eliminate that constant by matching to the initial condition (also called the boundary condition).

We only match the *full* solution to the initial condition.

We will illustrate all this with circuits examples.

Differential Equations: Simple Example

- Suppose we have one spatial dimension x and an object moving with velocity v(t). What is it's position x(t)?

$$v(t) = \frac{dx}{dt}$$

Differential Equations: Simple Example

Math Example

$$\frac{dV}{dt}+\frac{1}{\tau}V=\frac{1}{\tau}V_1 \quad where\ V_1,\tau\ \ are\ \ constants$$

What is V(t)?

Boundary Condition/Initial Condition $V(0)=V_0$

$V_f=V_1$ *particular / forced solution*

Note that this solves the complete differential equation

Note that

$V_n=Ae^{-t/\tau}$ *A any constant, solves the natural/homegeonous equation*

$$\frac{dV}{dt}+\frac{1}{\tau}V=0 \quad so$$

$$V(t)=\underbrace{\underbrace{V_1}_{forced}+\underbrace{Ae^{-t/\tau}}_{natural}}_{complete}\ solves\ the\ complete\ differential\ equation$$

Match Initial Condition to complete solution:

$$V(0)=V_1+Ae^{-0/\tau}=V_1+A=V_0\rightarrow A=V_0-V_1$$

$$V(t)=V_1+\left(V_0-V_1\right)e^{-t/\tau}$$

Example

Suppose I_0 is constant and non-zero.

What is $I_1(t)$ for t>0?

$I_L(t)=I_o \leq t$

$I_1(t)=0 \leq t$

Since this problem fixes conditions under which $V_L(t)=0 \leq t$

And $V_L(t)=0 \geq t$

thus

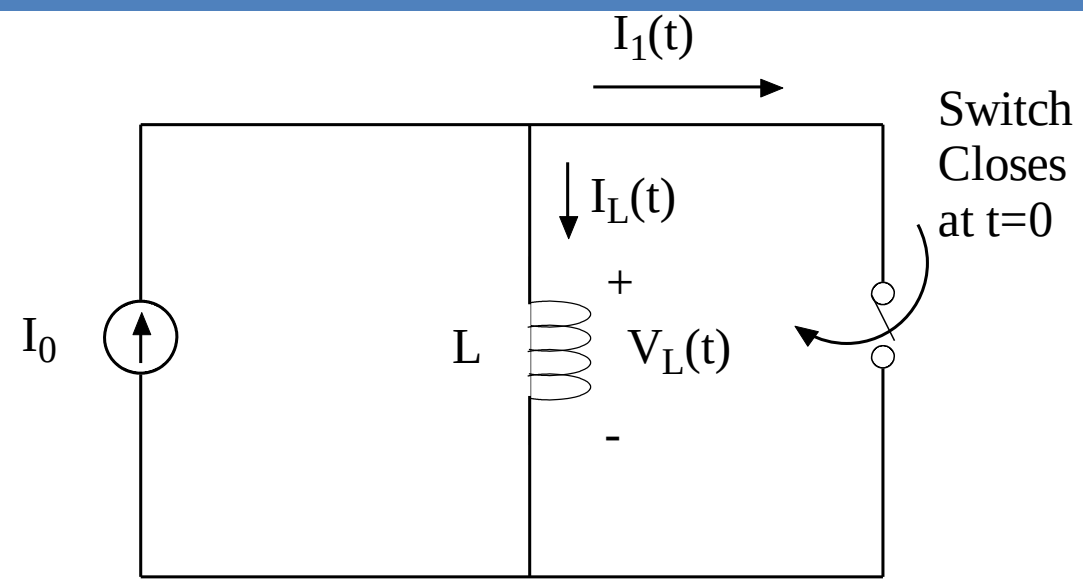

$$\frac{\partial I_L}{\partial t} = \frac{V_L}{L} = 0 \quad \forall t$$

$$\rightarrow I_L(t>0) = I_L(t<0) = I_0$$

Modified Example

Suppose I_0 is constant and non-zero.

What is $I_1(t)$ for t>0?

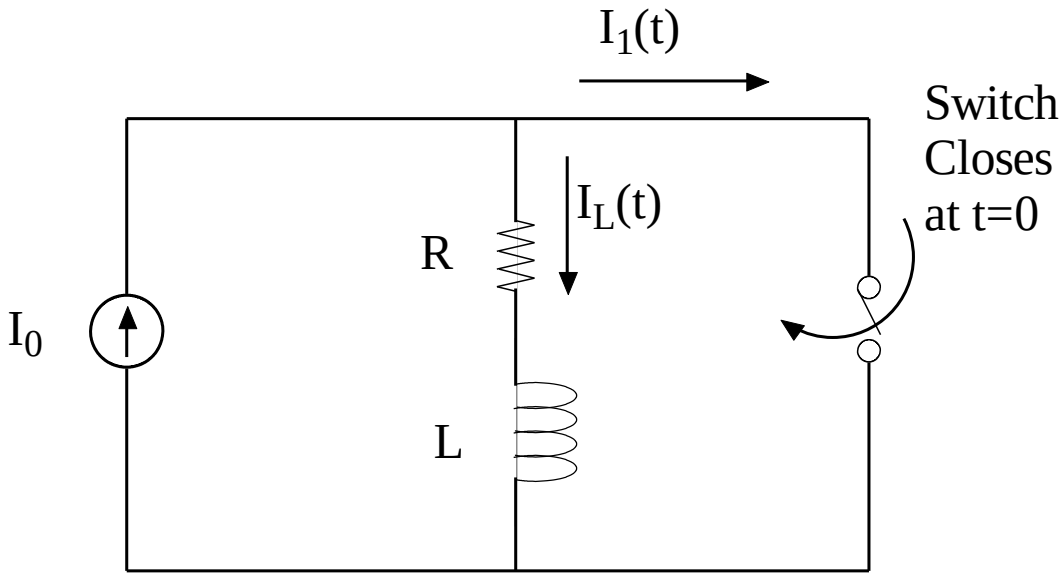

General Approach

- Use KVL, KCL, Circuit Element Laws to find differential equation for circuit problem
- Find the *Initial Conditions* (same as boundary conditions)
- Find the *Natural Solution* (homogenous solution)
  - This is the same as the unforced circuit reponse
- Find the *Forced Solution* (particular solution)
- Add the Forced+Natural Solutions to get the *Complete Solution*
- Eliminate the Unknowns (1 unknown in a FOC) using the Initial Conditions

Modified Example

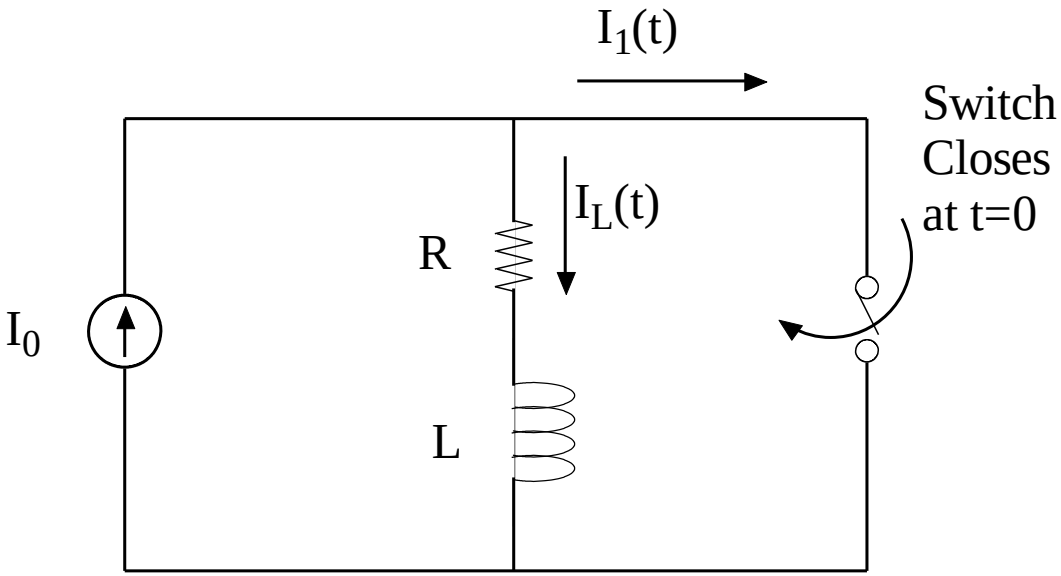

Modified Example

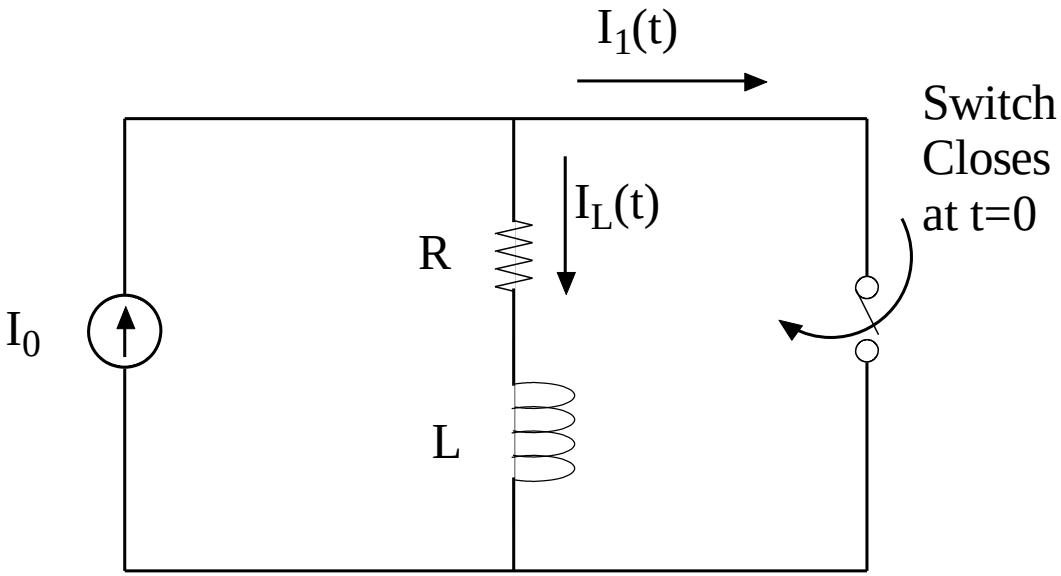

Modified Example

$$I_0 = I_L + I_1$$ KCL

$$V_L + I_L R = 0$$ KVL

$$L\frac{\partial I_L}{\partial t} + I_L R = 0$$ Diff. Eqn.

$$\frac{\partial I_L}{\partial t} + \frac{R}{L} I_L = 0$$ Standard Form

$$\frac{\partial I_L}{\partial t} + \frac{1}{\tau} I_L = 0$$

$$\tau = \frac{L}{R}$$

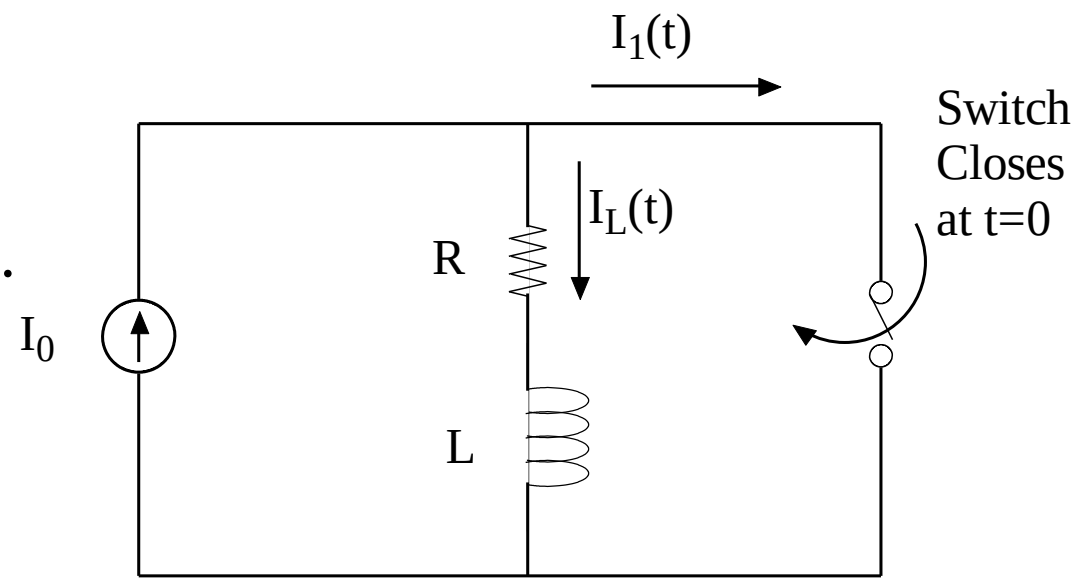

Modified Example

$$\frac{\partial I_L}{\partial t} + \frac{R}{L} I_L = 0 = \frac{\partial I_L}{\partial t} + \frac{I_L}{\tau}$$

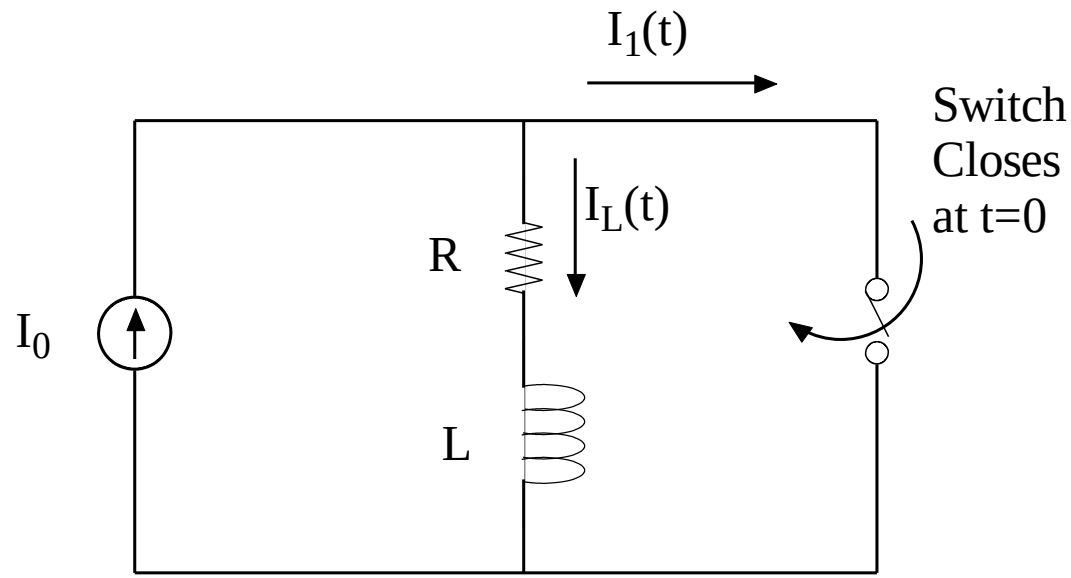

Natural Solution:

$$I_L = Ae^{-t/\tau} = Ae^{-tR/L}$$

Forced Solution=0

Initial Condition:

$$I_L(t=0) = I_0$$

Why is this my initial condition?

$$I_L(0) = Ae^{-0/\tau} = I_0$$

$$\rightarrow I_L(t) = I_0 e^{-tR/L}$$

$$\rightarrow I_1(t) = I_0 - I_0 e^{-tR/L} = I_0\left(1 - e^{-tR/L}\right)$$

Modified Example

$$I_L(t) = I_0 e^{-tR/L}$$

$$I_1(t) = I_0\left(1 - e^{-tR/L}\right)$$

Note the limit as R→0

The problem reduces to our previous ideal case!

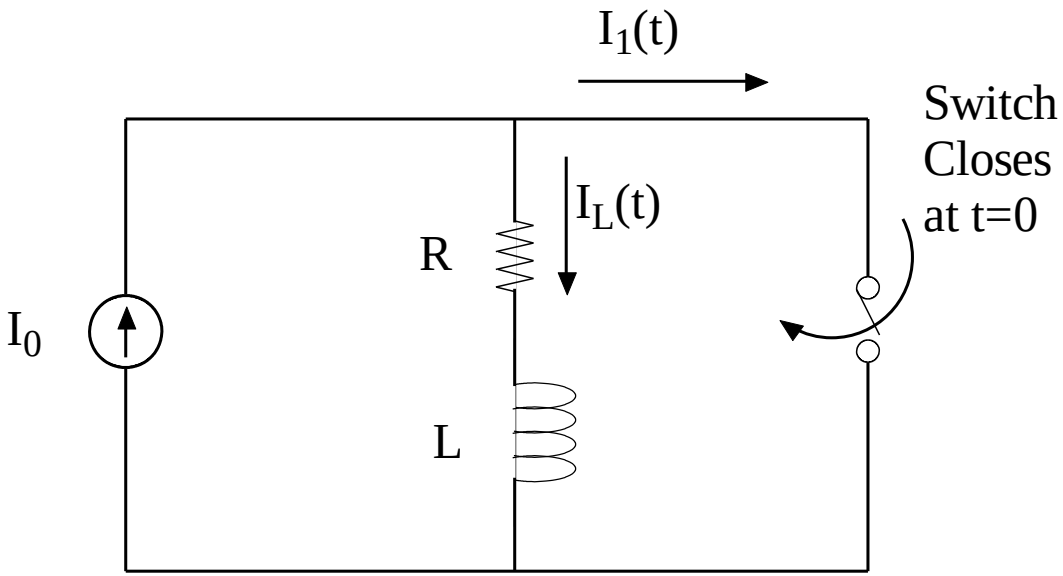

Modified Example

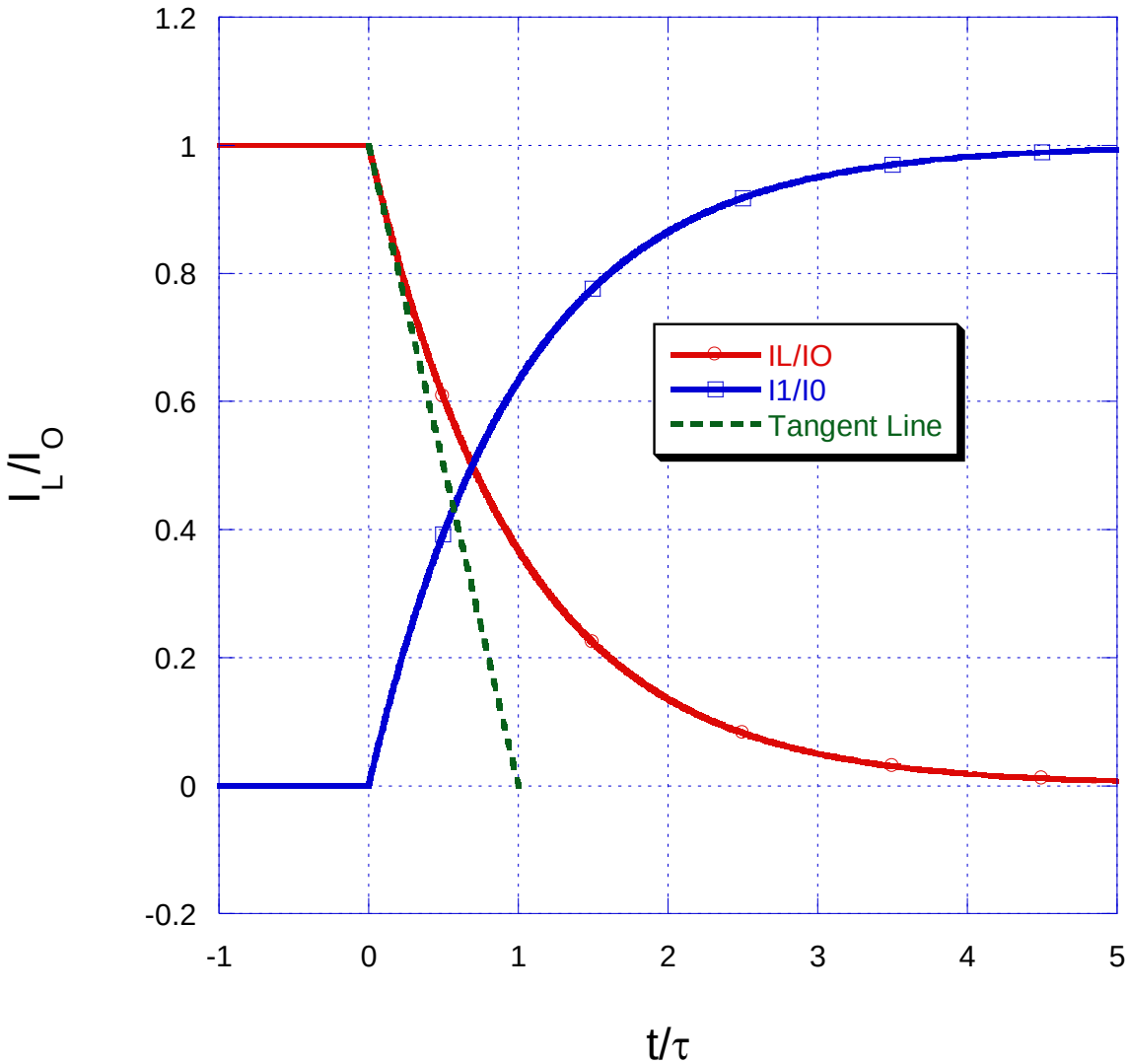

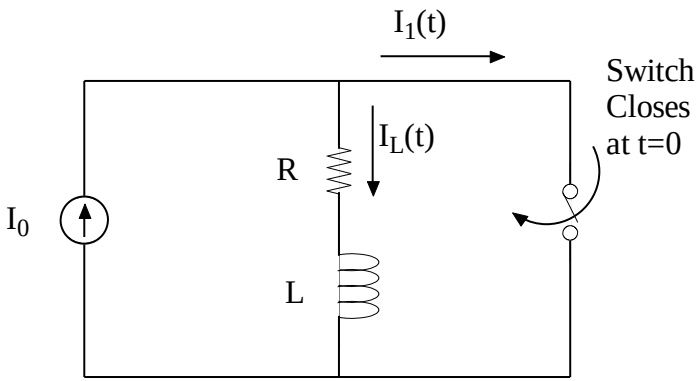

Note:

Tangent line shows intersection with t-axis at one time constant

Modified Example

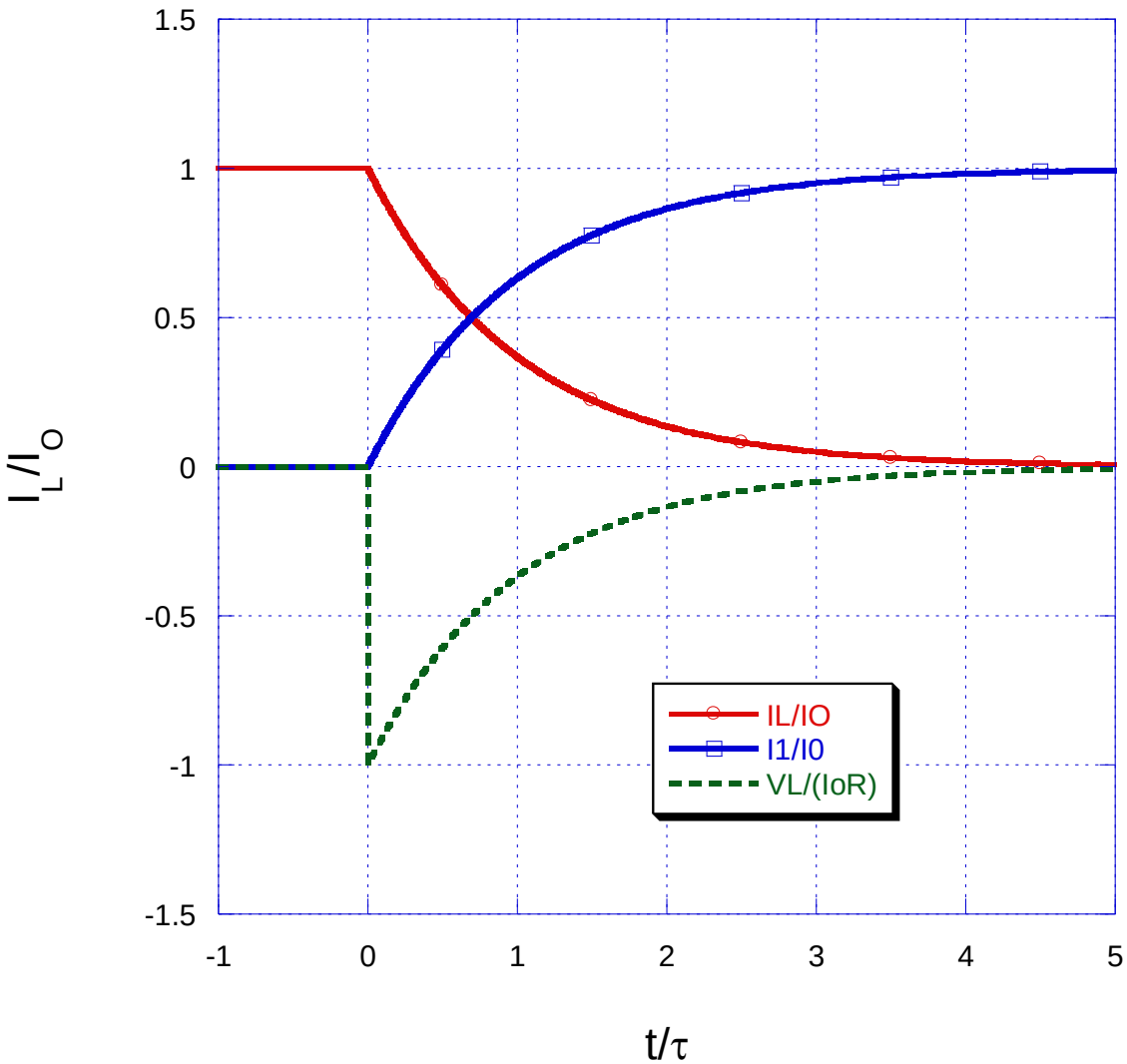

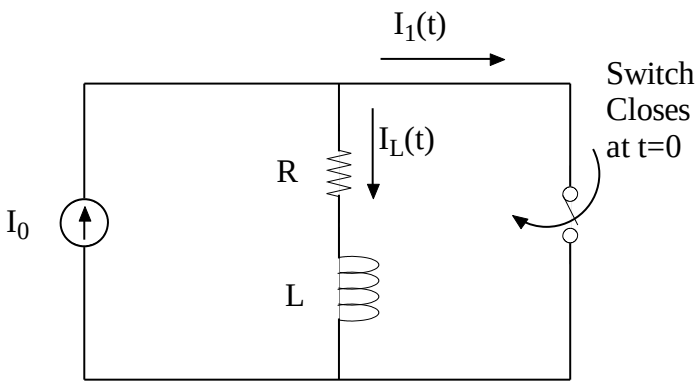

Note:

I_L is continuous at t=0

V_L is not

Natural Solutions: RL Circuits

- Really, We Just Did This but Let's Be Formal and Do It Right

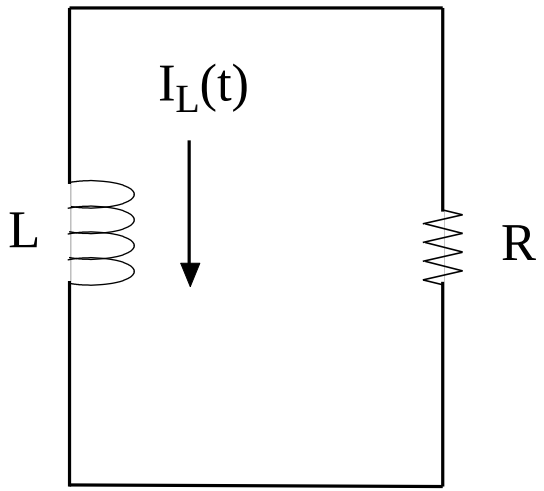

$$Assume$$

$$I_L(t) = I_o \quad \forall (t < 0)$$

$$find\ I_L\ \ for\ t > 0$$

Natural Solutions: RL Circuits

$$Assume\ I_L(t) = I_o \quad \forall(t<0), \quad find\ I_L\ for\ t>0$$

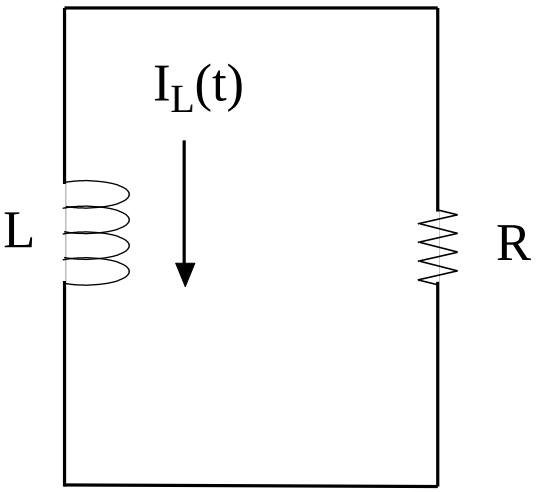

$$V_L + I_L R = 0 \quad KVL$$

$$L\frac{\partial I_L}{\partial t} + I_L R = 0$$

$$\frac{\partial I_L}{\partial t} + \frac{R}{L} I_L = 0$$

$$\frac{1}{I_L}\frac{\partial I_L}{\partial t} = -\frac{R}{L}$$

$$\int \frac{1}{I_L}\frac{\partial I_L}{\partial t}\partial t = \int \frac{1}{I_L}\partial I_L = -\int \frac{R}{L}\partial t$$

$$\ln\left(I_L\right) + B = -\frac{R}{L}t$$

$$I_L(t) = Ae^{-\frac{R}{L}t}$$

Natural Solutions: RC Circuits

$$Assume\ V_C(t) = V_o \quad \forall (t < 0), \quad find\ V_c\ \ for\ t > 0$$

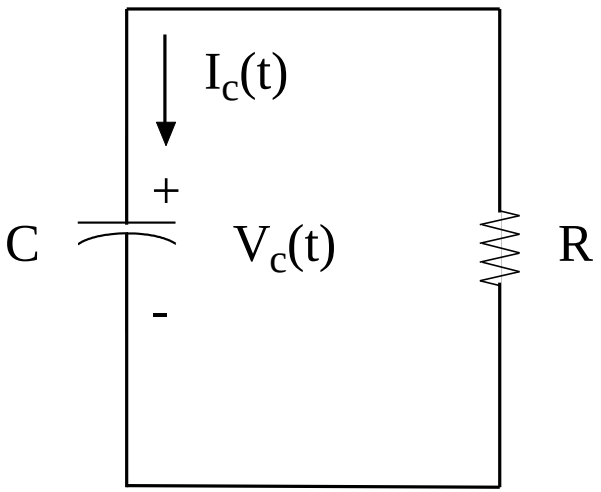

Natural Solutions: RC Circuits

$$Assume\ V_C(t) = V_o \quad \forall (t<0), \quad find\ V_c\ for\ t>0$$

$$V_c + I_c R = 0 \quad KVL$$

$$RC\frac{\partial V_C}{\partial t} + V_c = 0$$

$$\frac{\partial V_C}{\partial t} + \frac{1}{RC}V_c = 0$$

$$General\ Solution:$$

$$V_c(t) = Ae^{-t/(RC)} = Ae^{-t/\tau}$$

$$\tau = RC$$

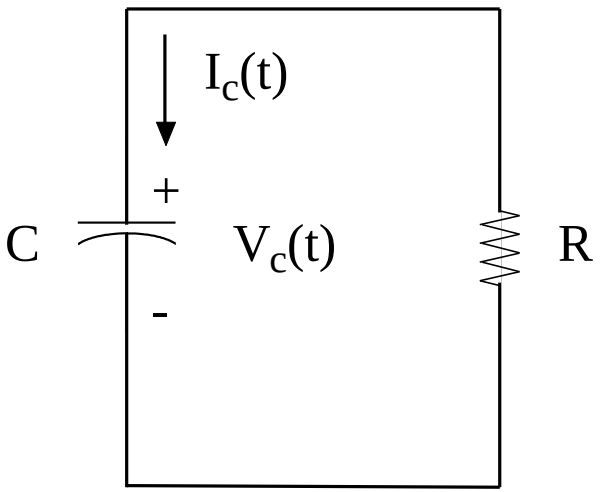

Numerical Example

$$V_c(t) = 10V \;\; \forall (t < 0)$$

$$C = 1\mu F \quad R = 10K\Omega$$

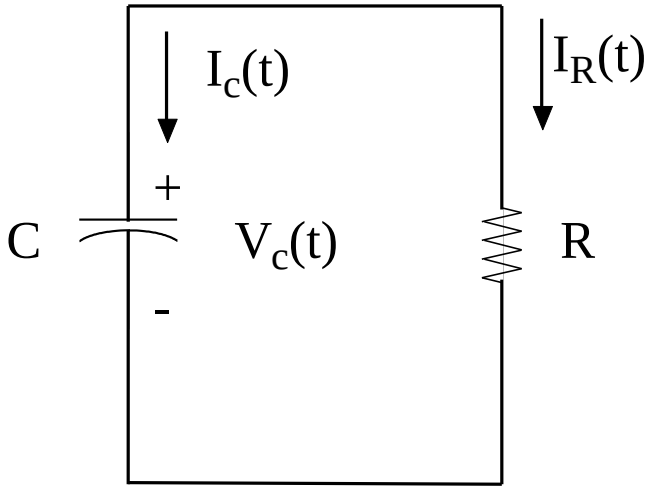

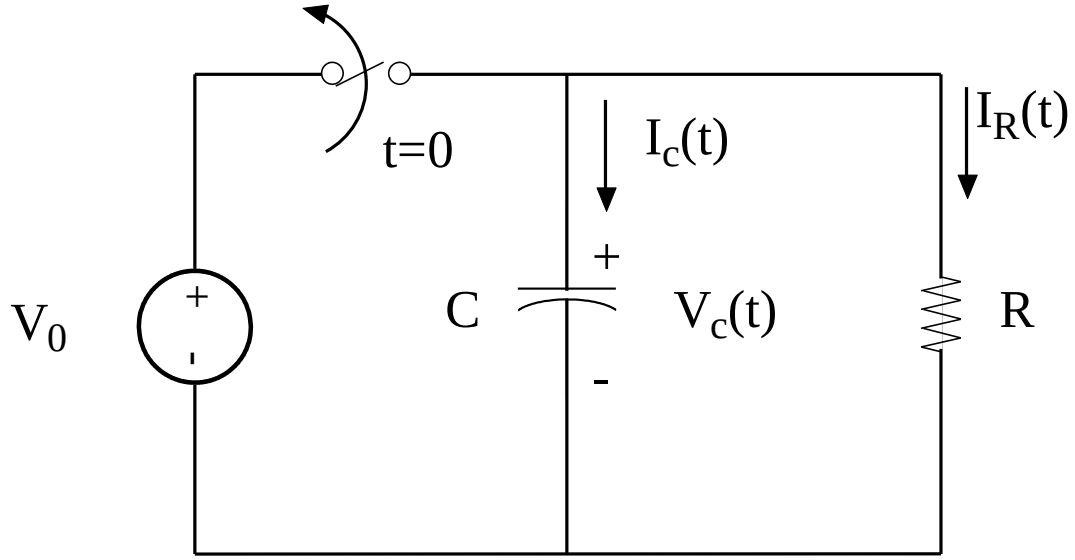

Numerical Example

$$V_c(t) = 10V \quad \forall (t < 0)$$

$$C = 1\mu F \quad R = 10K\Omega$$

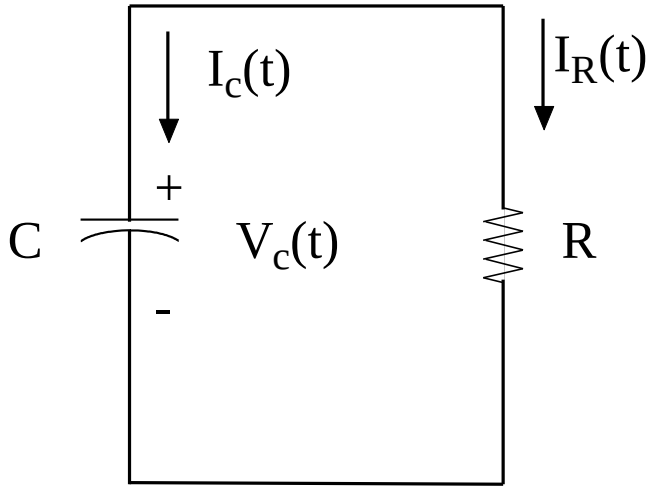

Numerical Example

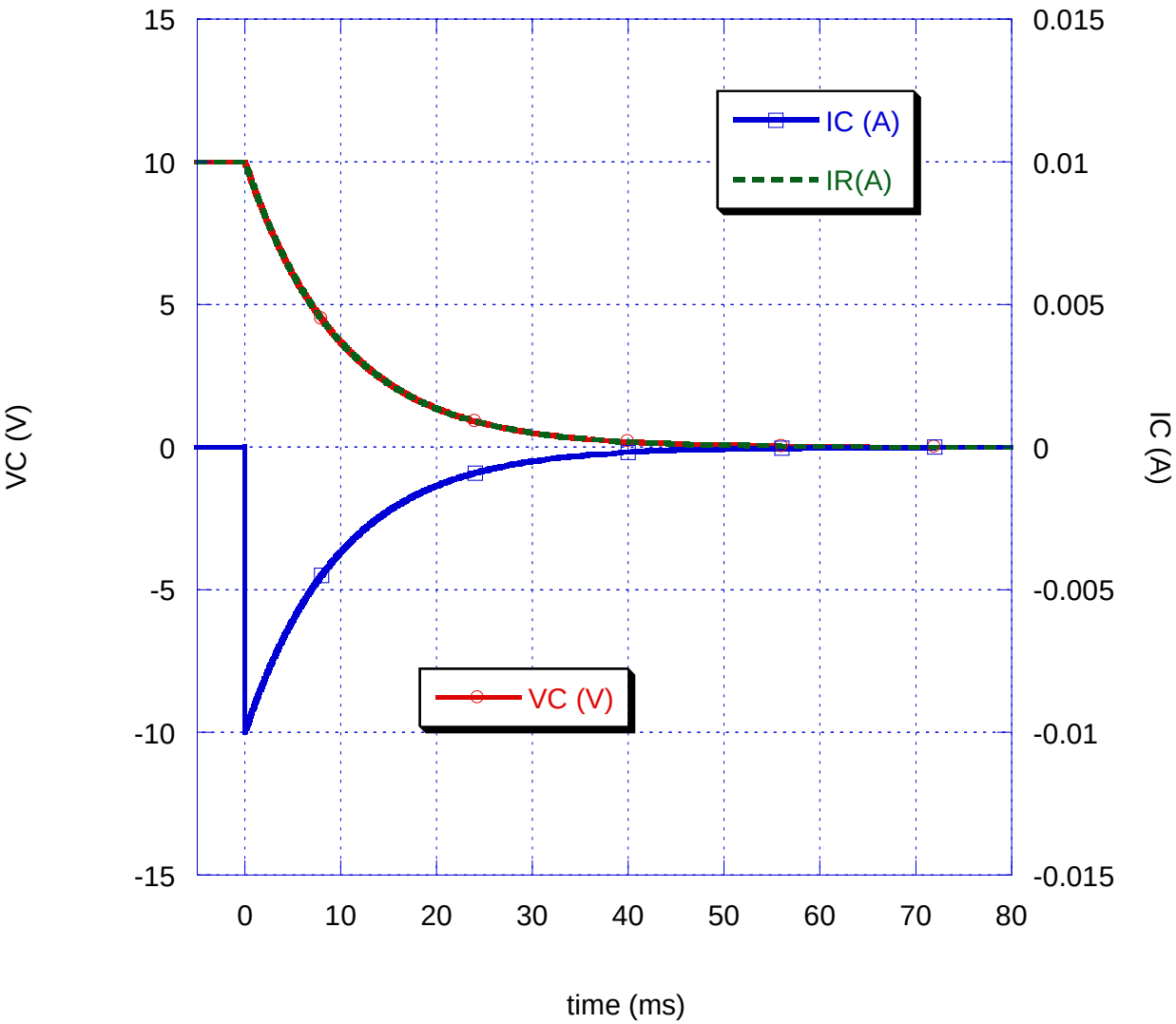

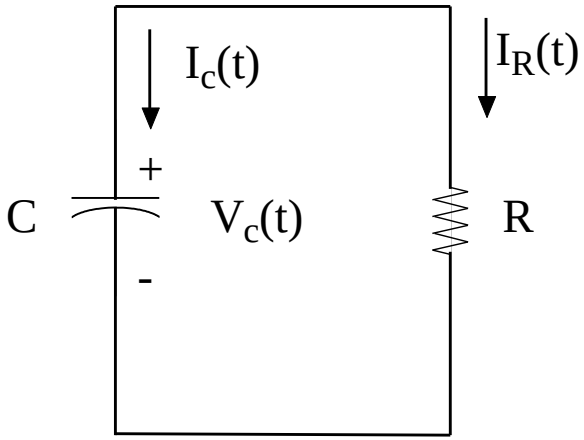

$$V_c(t) = 10V \;\; \forall (t < 0)$$

$$C = 1\mu F \quad R = 10K\Omega$$

Numerical Example

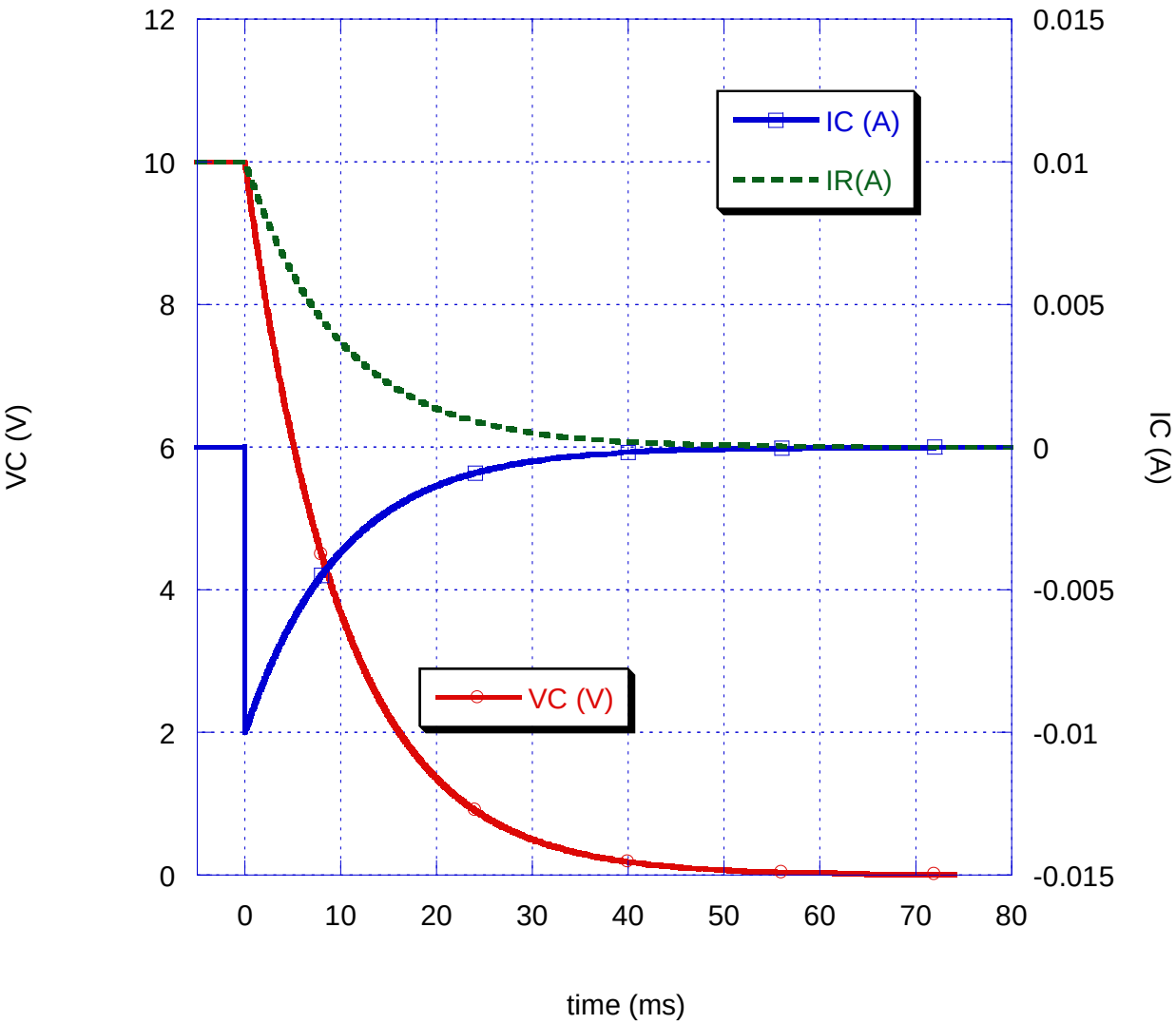

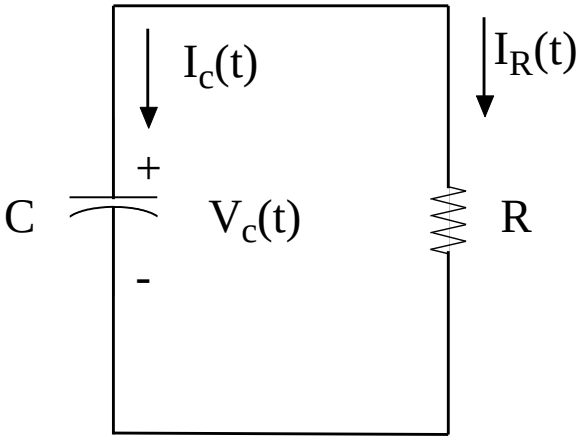

$$V_c(t) = 10V \ \ \forall (t < 0)$$

$$C = 1\mu F \quad R = 10K\Omega$$

Same data, only V-scale is changed

Procedure for Solving Complete (Forced) FOC Problems

1) Find Initial/Boundary Conditions
2) Find Natural (homogeneous) Solution
   This does not depend on the independent sources in the circuit
3) Find Forced (particular) Solution
   This is directly dependent on the independent sources in the circuit
   For step response problems this is the solution when $t \longrightarrow \infty$
4) Add Forced & Natural to get Complete Solution
5) Match Unknown in Complete Solution to Initial Conditions

<u>(1)-(3) can be done in any order, but (4)&(5) must come at the end!!</u>

Integral Math for the First-Order Differential Equation

In this case, we can perform a simple integration

Differential Equation:

$$\frac{dv}{dt} + \frac{v}{RC} = 0$$

$$\frac{dv}{v} = -\frac{1}{RC}dt$$

Integrate both sides:

$$\int \frac{dv}{v} = -\int \frac{1}{RC}dt$$

$$\ln(v) = -\frac{t}{RC} + K$$

(K=unknown constant)

Take exponent of both sides:

$$v = e^{-t/RC+K}$$

$$v(t) = Ae^{-t/RC}$$

(A=unknown constant)

Use initial condition to determine unknown constant A

$$v(0) = V_0 = Ae^{-0/RC} = A$$

$$\boxed{v(t) = V_0 e^{-t/RC}}$$

Time Constant

The time constant is the time required for the response to decay to 1/e of the initial value

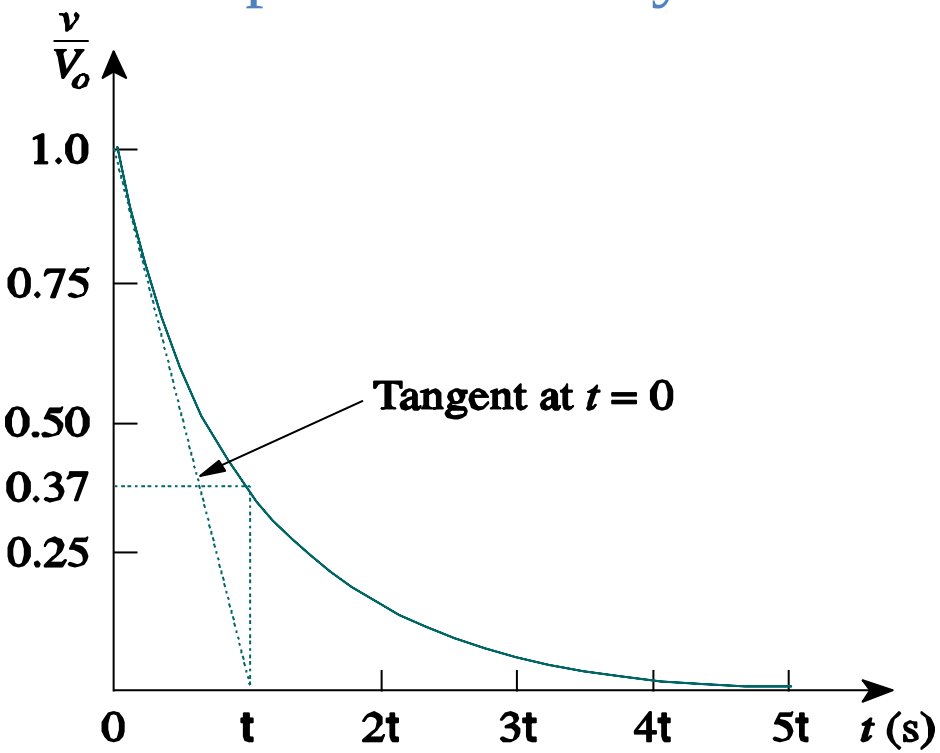

$$v(t) = V_0 e^{-t/RC} = V_0 e^{-t/\tau}$$

$$\tau = RC$$

$$\left.\frac{d}{dt}\left(\frac{v}{V_0}\right)\right|_{t=0} = -\frac{1}{\tau} e^{-t/\tau}\Big|_{t=0} = -\frac{1}{\tau}$$

What will response for longer/shorter τ look like?

Response Terminology

Source dependence

Natural response – response in absence of sources

Forced response – response due to external source

Complete response = Natural + Forced

Time dependence

Transient response – time varying response (temporary)

Steady state response – time independent (permanent)

Complete response = Transient + Steady State

First Order Circuits - Tips

- Determine what you are looking for, what you know
- Rewrite circuit in Thevenin or Norton equivalent
- Use superposition if you have multiple sources
- Determine solution from initial and steady state conditions

Example: this circuit is straightforward if you replace the current source and 2 ohm resistor with Thevenin equivalent

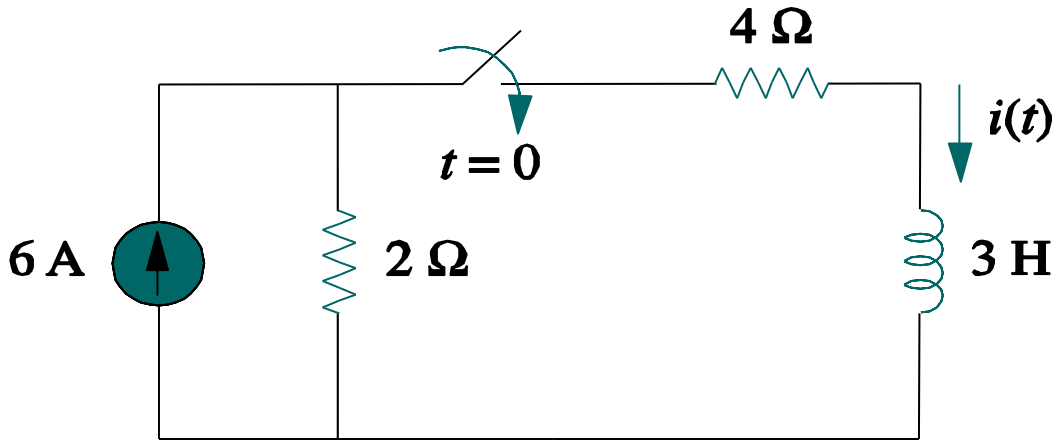

DC Conditions

- Under DC Conditions, All d/dt Terms Are ZERO
  - $I_c=0$, $V_L=0$
  - Capacitors Act Like Open Circuits, Inductors Act Like Short Circuits
- Easy Issue for FOC's, but Generally True for DC Conditions and Very Helpful for Higher Order Circuits

Example

Find Initial Condition on Capacitor for t<0

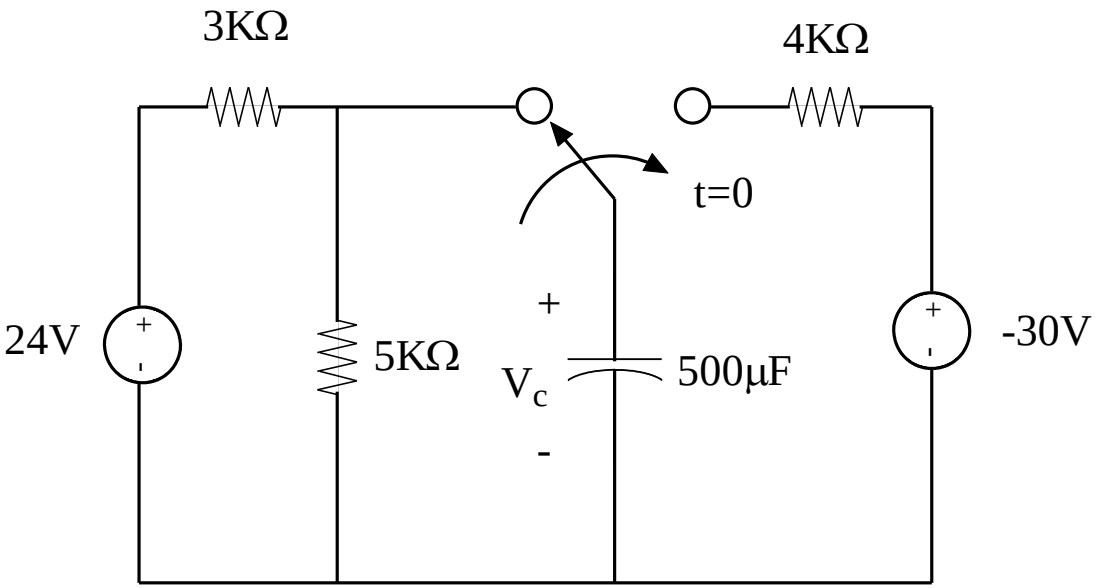

Example

Find Initial Condition on Capacitor for t<0

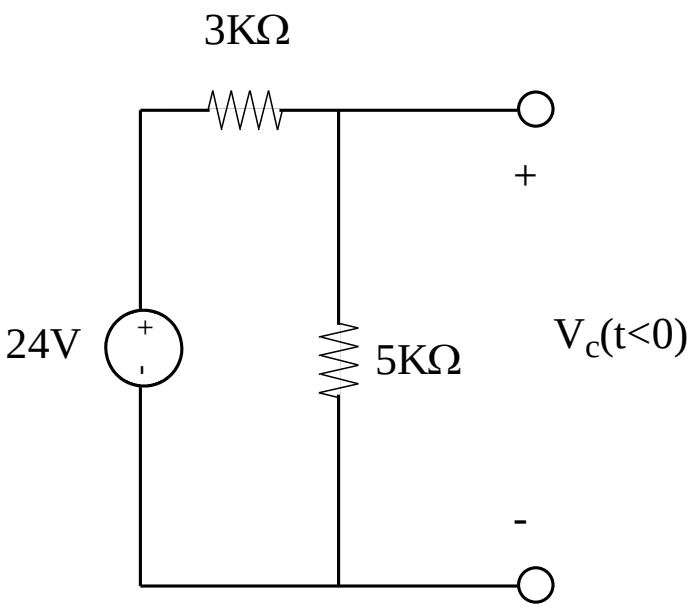

Voltage Divider

$$V_c(t<0) = \frac{5K\Omega}{5K\Omega + 3K\Omega} 24V = 15V$$

Example

Find Forced Solution:

$V_{Cf}=V_C(t\rightarrow\infty)$

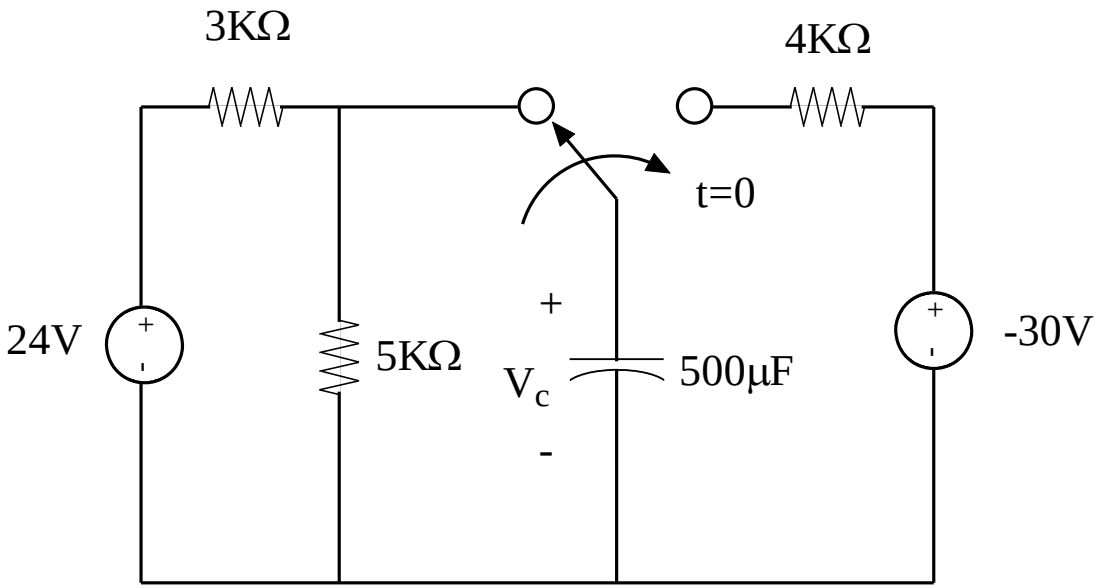

Example

Find Forced Solution:
$V_{Cf}=V_C(t\rightarrow\infty)$

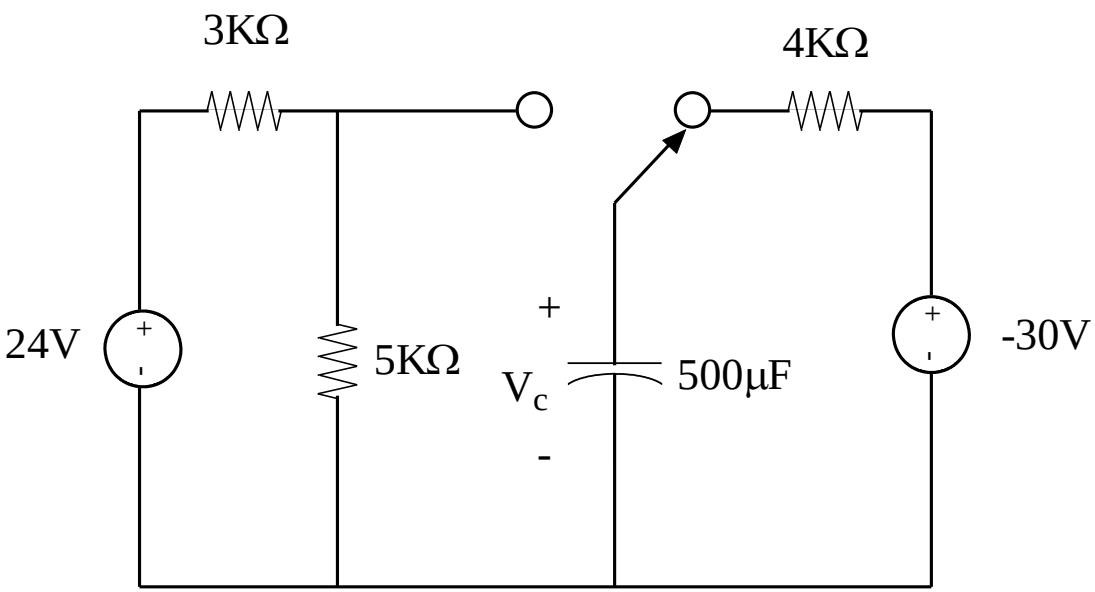

Find Natural Solution

Example

Match Initial Condition

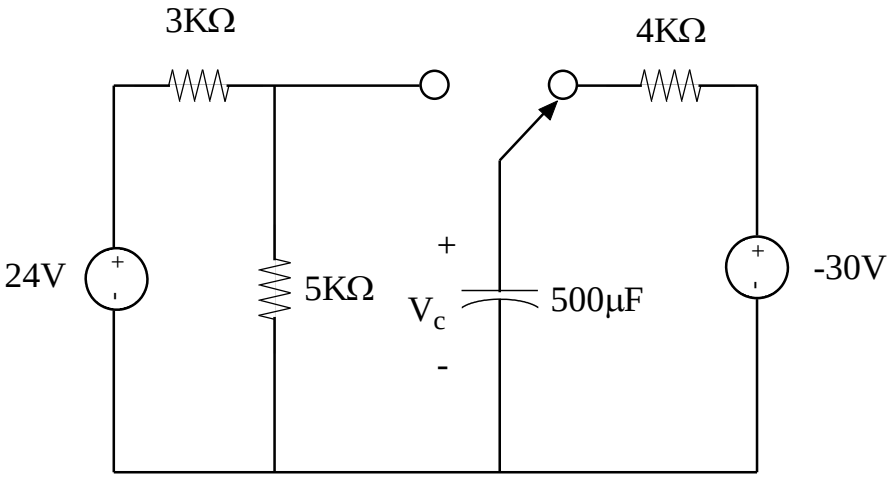

Example

$$Initial\ Condition: V_c(0) = 15V$$

$$V_{Cf} = -30V$$

$$Natural\ Solution: V_{cn}(t) = Ae^{-t/\tau}$$

$$with\ \tau = (4K\Omega)(500\mu F) = 2s$$

$$Complete\ Solution:\ V_c(t) = V_{Cf} + V_{Cn}$$

$$V_c(t) = -30V + Ae^{-t/2s}$$

$$Match\ Initial\ Condition\ at\ t = 0^+$$

$$V_c(0) = 15V = -30V + A \rightarrow A = 45V$$

$$V_c(t) = -30V + (45V)e^{-t/2s}$$

$$i_c(t) = C\frac{\partial V_c}{\partial t} = (-11.25mV)e^{-t/2s}$$

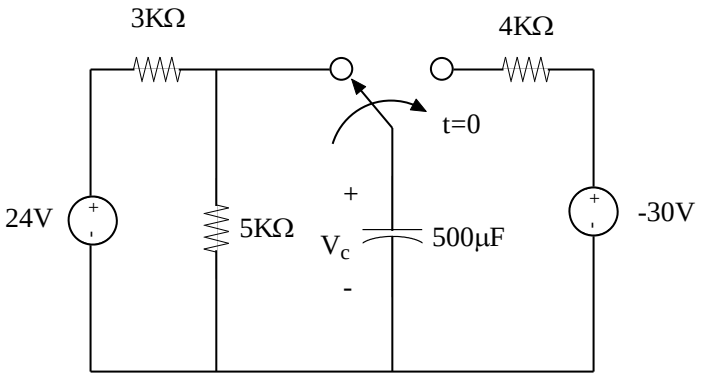

Example

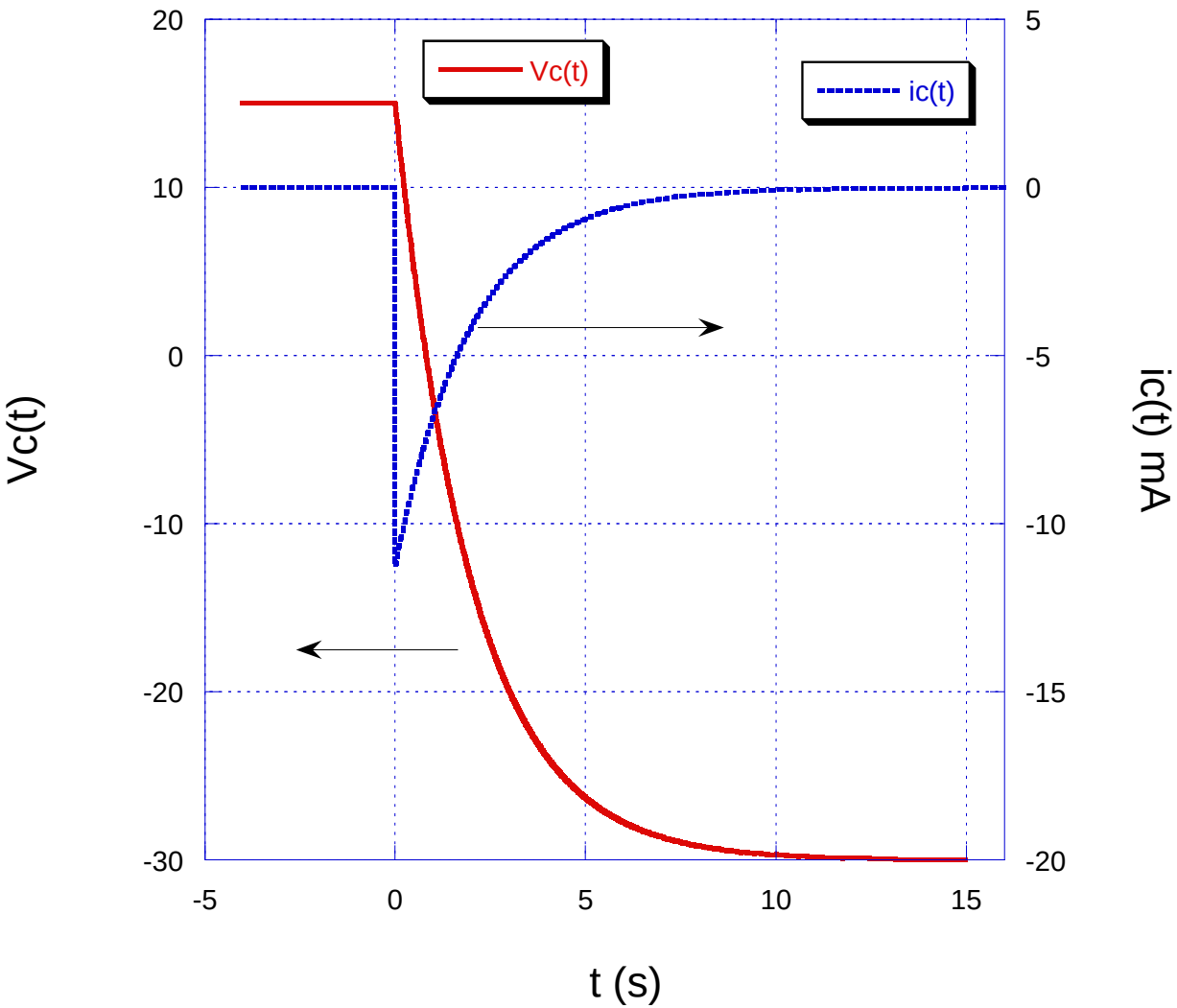
Vc(t)
ic(t)
20
10
0
-10
-20
-30
5
0
-5
-10
-15
-20
-5
0
5
10
15
Vc(t)
ic(t) mA
t (s)

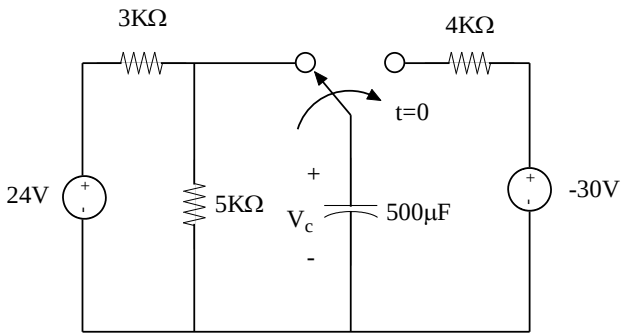
3KΩ
4KΩ
t=0
24V
5KΩ
+
Vc
-
500μF
-30V

Unit Step Response

$$u(t) = \begin{Bmatrix} 0 \,\forall t < 0 \\ 1 \,\forall t \geq 0 \end{Bmatrix}$$

$$\textit{sometimes written } u_0(t)$$

$$u(t - t_0) = \begin{Bmatrix} 0 \,\forall t < t_0 \\ 1 \,\forall t \geq t_0 \end{Bmatrix}$$

- Useful way to characterize the time response of linear systems
- Directly interesting for speed of digital systems
- Can use a series of steps to approximate any signal

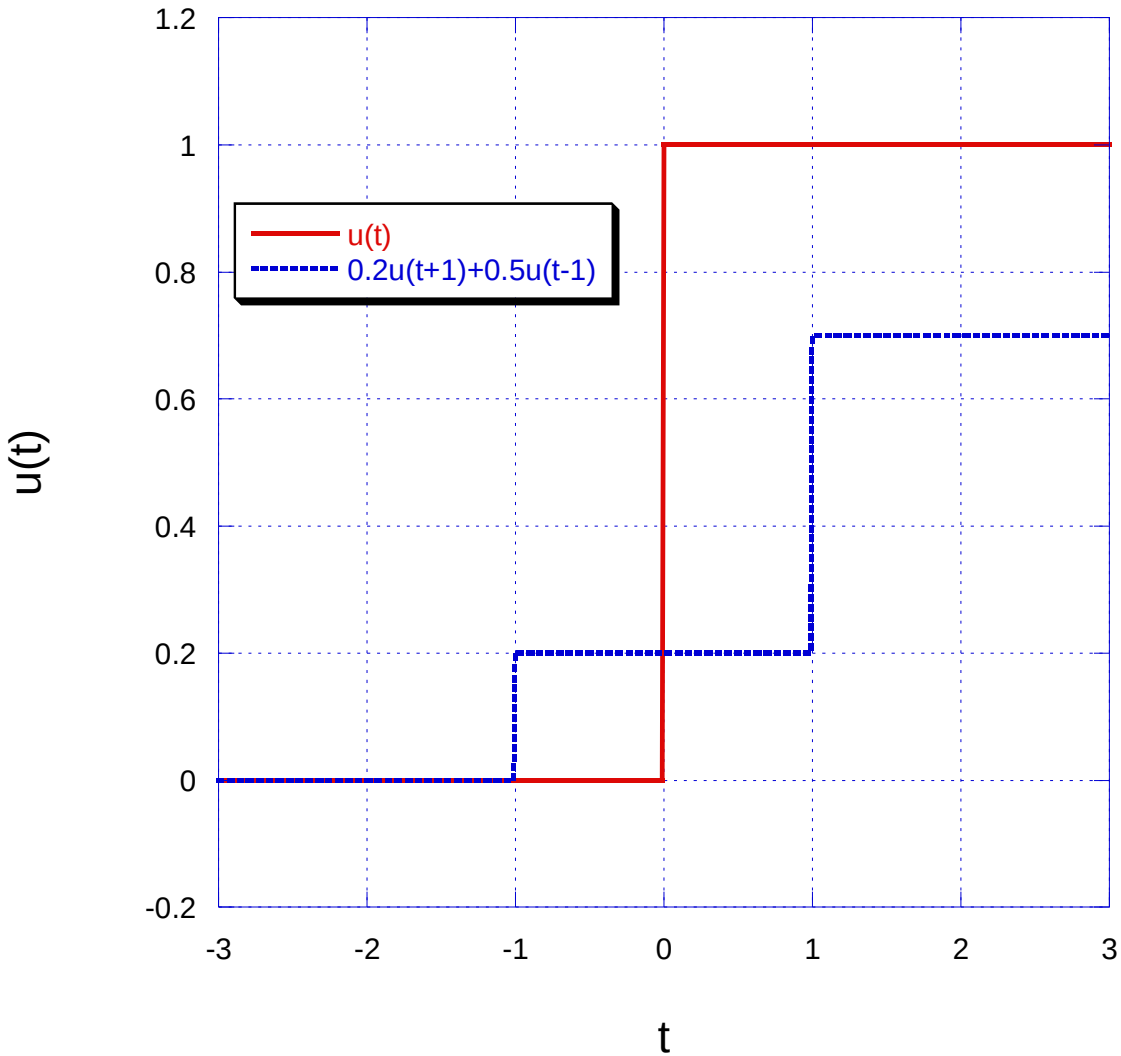

Unit Step Response of RC Circuit: Natural Response & Initial Conditions

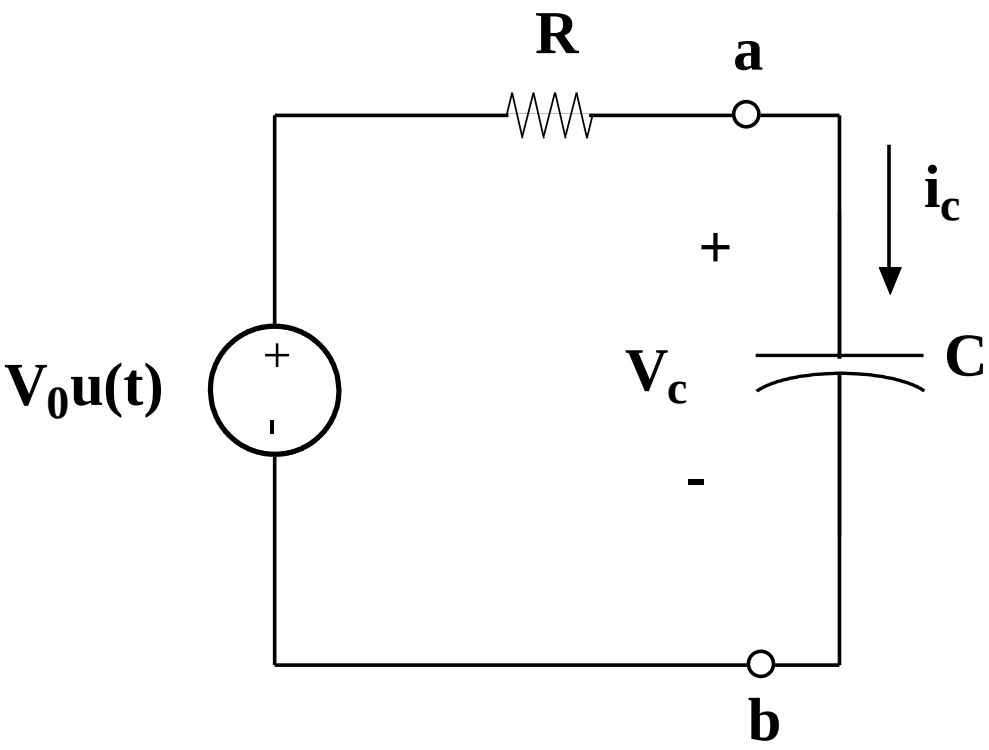

Unit Step Response of RC Circuit: Forced Response

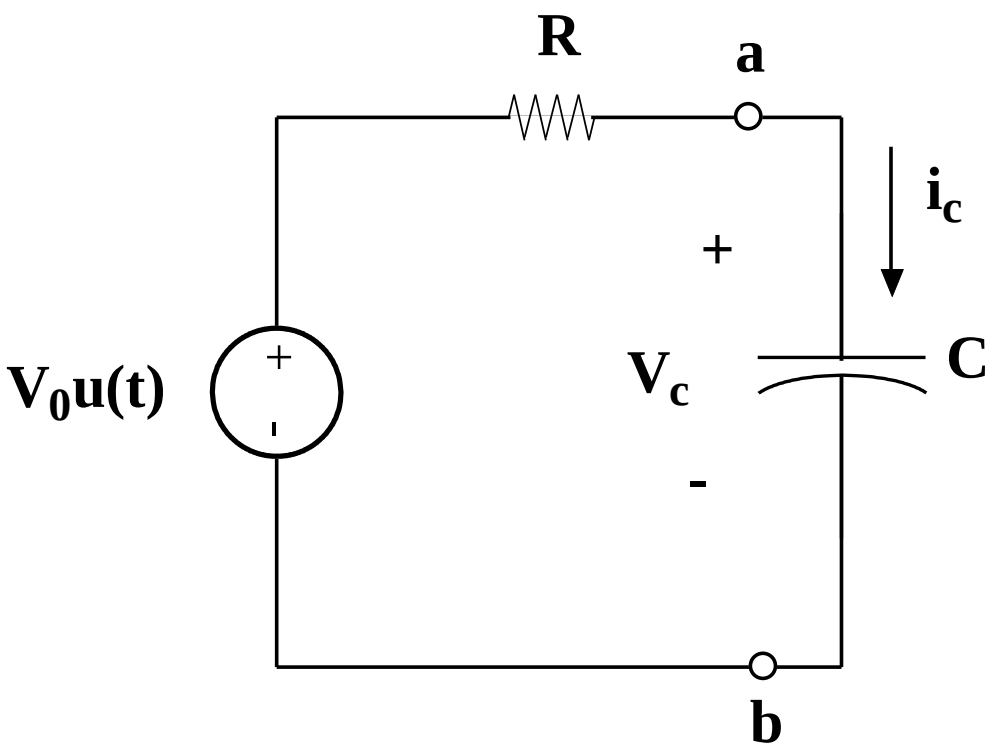

Unit Step Response of RC Circuit: Total Response/Match Initial Condition

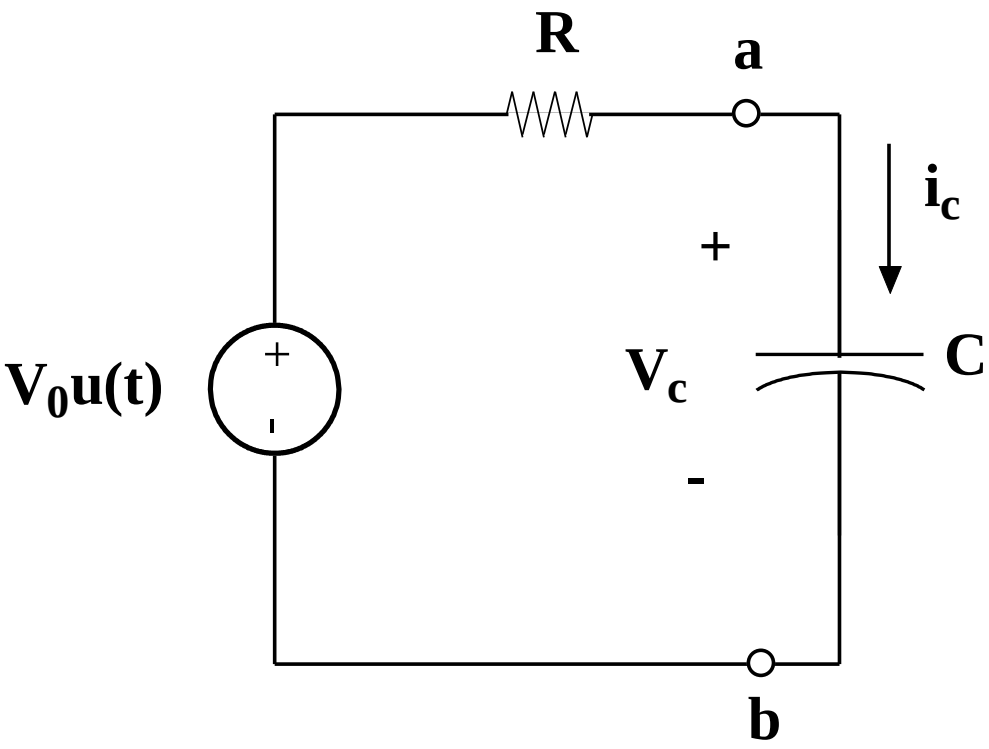

Unit Step Response of RC Circuit

Initial Condition

$$V_c(t) = 0 \; \forall t < 0$$

$$for \;\; t \geq 0$$

$$i_c R + V_c = V_0 \qquad KVL$$

$$RC\frac{\partial V_c}{\partial t} + V_c = V_0$$

Natural solution solves

$$RC\frac{\partial V_c}{\partial t} + V_c = 0$$

Forced solution is one solution of

$$RC\frac{\partial V_c}{\partial t} + V_c = V_0$$

$$\left(Natural + Forced\right) = General\,/\,Complete\,Solution$$

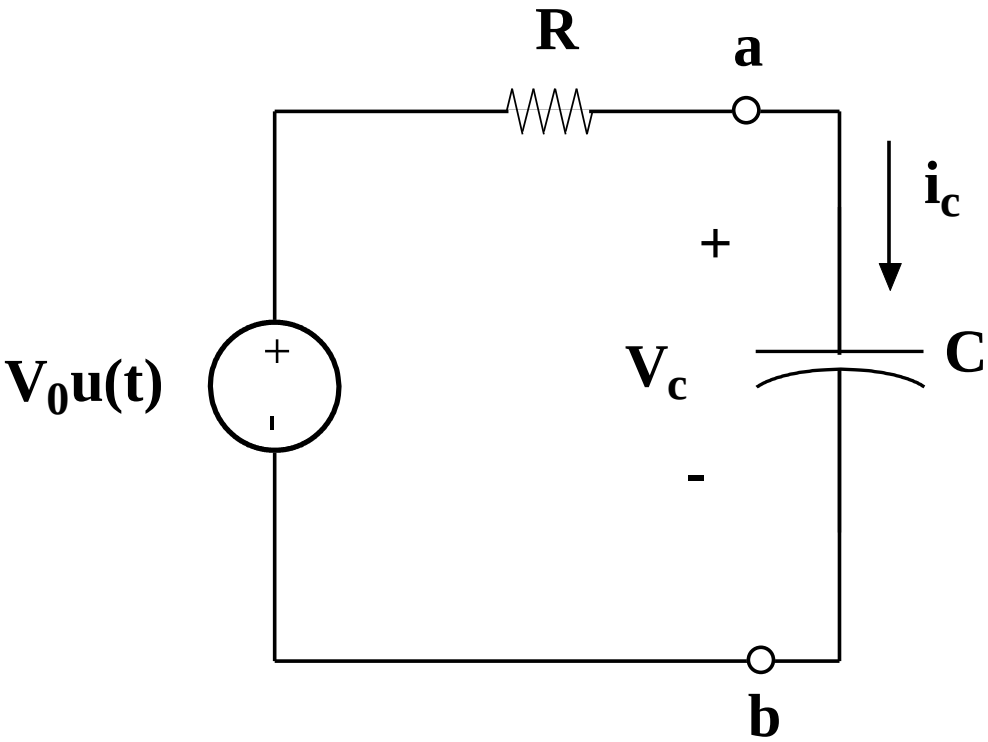

Unit Step Response of RC Circuit

$$Initial\ Condition\ V_c(t) = 0\ \forall t < 0$$

$$for\ \ t \geq 0 \quad RC\frac{\partial V_c}{\partial t} + V_c = V_0$$

$$Natural\ solution:\ Ae^{-t/\tau} \qquad \tau = RC$$

$$Forced\ solution\ of\ 1st\ Order\ ODE\ is\ of\ \ form\ of\ \ forcing\ \ function$$

$$V_{cf} = cons\tan t$$

$$RC\frac{\partial V_{cf}}{\partial t} + V_{cf} = V_0 \rightarrow V_{cf} = V_0$$

$$\left(Natural + Forced\right) = General\ /\ Complete\ Solution$$

$$V_c(t) = Ae^{-t/\tau} + V_0$$

$$Match\ Initial\ Condition$$

$$V_c(0) = 0 = A + V_0 \rightarrow A = -V_0$$

$$\rightarrow V_c(t) = -V_0 e^{-t/\tau} + V_0 = V_0\left(1 - e^{-t/\tau}\right)$$

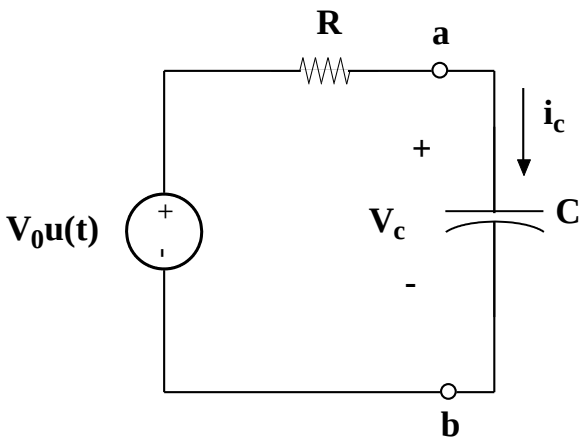

RC Unit Step Response

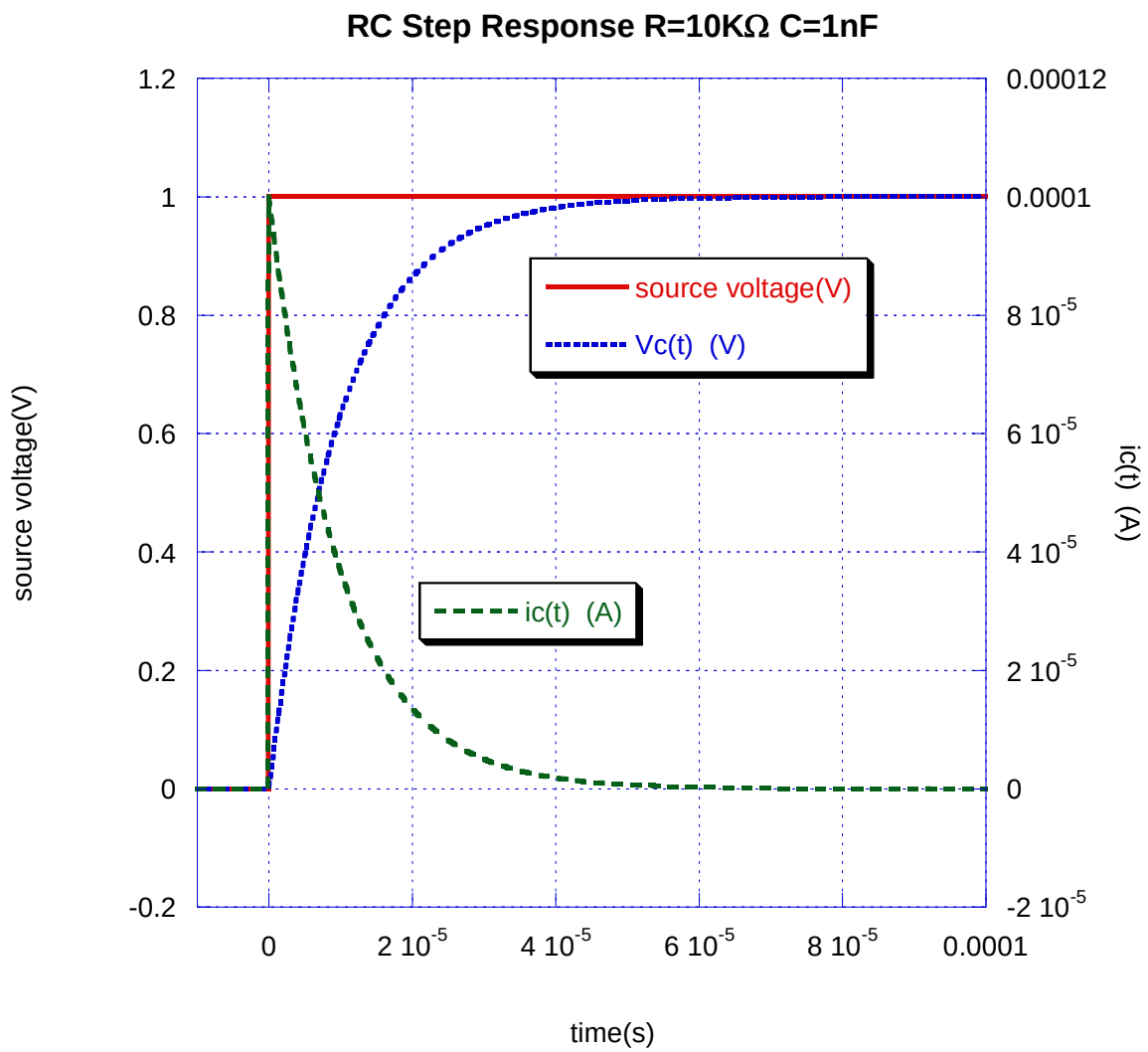

More Complex Response Example

- Object: Find $V_{ab}(t)$ given $I_s(t)$, $V_s(t)$, C
- Approach: Find the Thevenin equivalent circuit that the capacitor "sees"
- Could Use Superposition to find $V_{ab,oc}$ from V_s and I_s sources independently, then add result

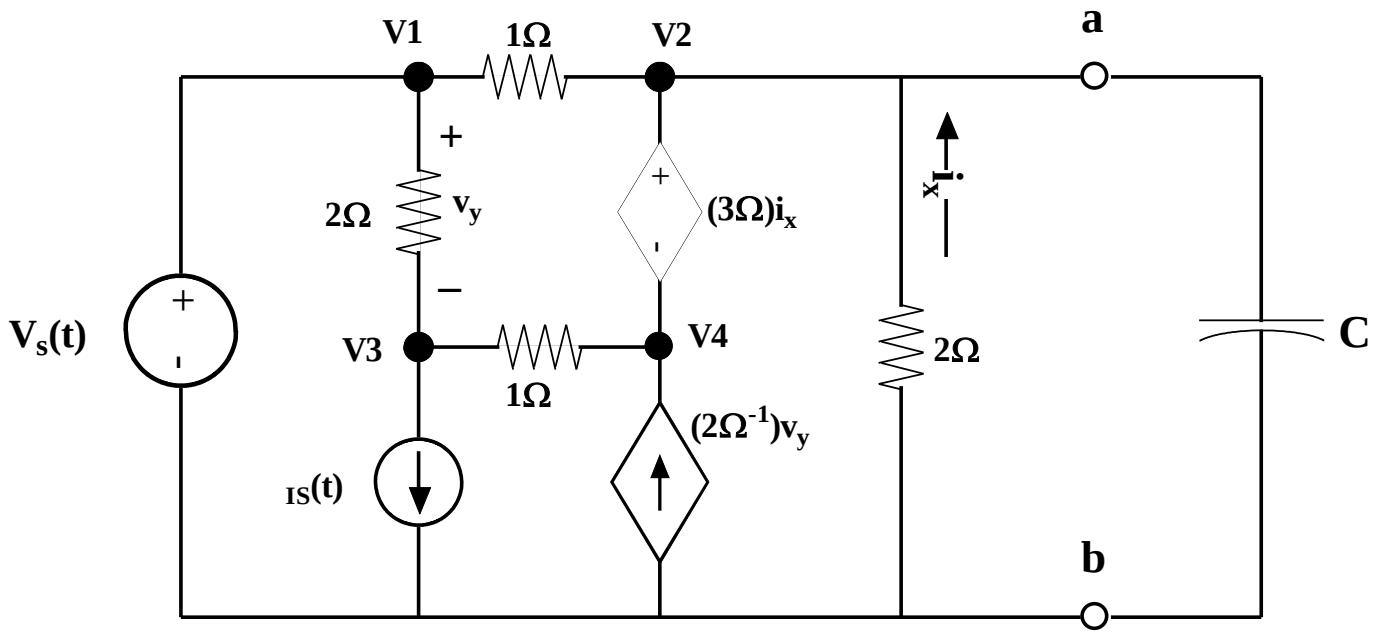

Nodal Analysis 2

- Write KCL Equations
  - KCL at SN:

$$\frac{V_s - v_2}{1\Omega} + \frac{v_3 - v_4}{1\Omega} + i_x + 2\Omega^{-1} v_y = 0$$

  - KCL at Node 3:

$$\frac{V_s - v_3}{2\Omega} + \frac{v_4 - v_3}{1\Omega} = I_s$$

- Conditions on Dependent Sources

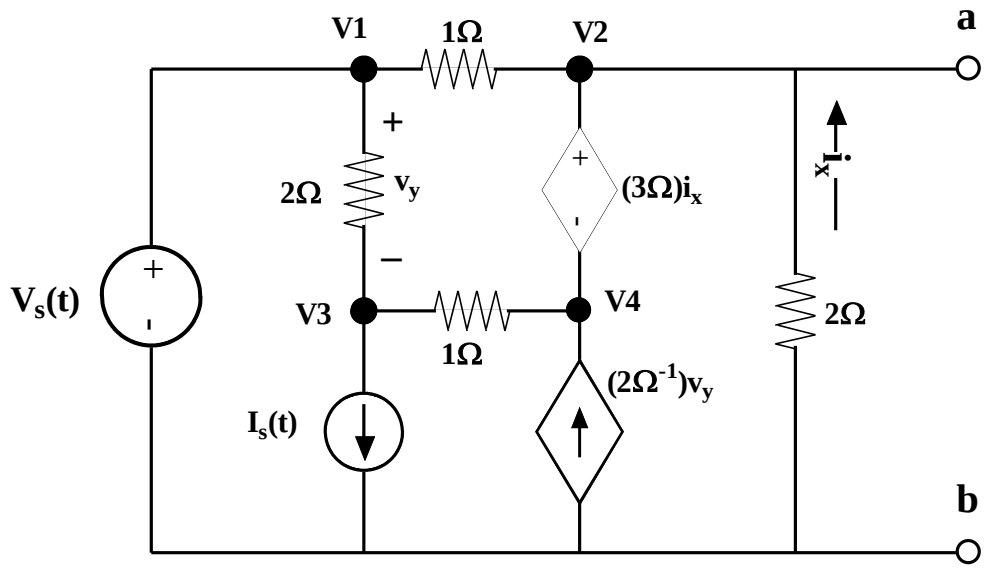

$$i_x = -\frac{v_2}{2\Omega}$$

$$v_y = \left(v_1 - v_3\right)$$

$$v_4 = \left(v_2 - (3\Omega) i_x\right) = \left(v_2 + (3\Omega)\frac{v_2}{2\Omega}\right) = 2.5 v_2$$

Nodal Analysis 3

- Insert Dependent Source Condition Equations into KCL equations
  - SN:

$$\frac{V_s - v_2}{1\Omega} + \frac{v_3 - 2.5v_2}{1\Omega} + \left(-\frac{v_2}{2\Omega}\right) + 2\Omega^{-1}(V_s - v_3) = 0$$

$$\Rightarrow v_2\left[4\Omega^{-1}\right] + v_3\left[1\Omega^{-1}\right] = \left(3\Omega^{-1}\right)V_s$$

  - Node 3:

$$\frac{V_s - v_3}{2\Omega} + \frac{2.5v_2 - v_3}{1\Omega} = I_s$$

$$\Rightarrow v_2\left[2.5\Omega^{-1}\right] + v_3\left[-1.5\Omega^{-1}\right] = \left[I_s - \left(0.5\Omega^{-1}\right)V_s\right]$$

$$\begin{bmatrix} 4\Omega^{-1} & 1\Omega^{-1} \\ 2.5\Omega^{-1} & -1.5\Omega^{-1} \end{bmatrix}\begin{bmatrix} v_2 \\ v_3 \end{bmatrix} = \begin{bmatrix} \left(3\Omega^{-1}\right)V_s \\ I_s - \left(0.5\Omega^{-1}\right)V_s \end{bmatrix}$$

$$\Rightarrow \begin{bmatrix} v_2 \\ v_3 \end{bmatrix} = \left(\frac{1}{17}\right)\begin{bmatrix} 3\Omega & 3\Omega \\ 5\Omega & -8\Omega \end{bmatrix}\begin{bmatrix} \left(3\Omega^{-1}\right)V_s \\ I_s - \left(0.5\Omega^{-1}\right)V_s \end{bmatrix}$$

$$\Rightarrow v_2 = \left(\frac{1}{17}\right)\left[8V_s + (2\Omega)I_s\right]$$

- Solve for $v_2 = V_{TH}$

Thevenin Equivalent

- Note that Req=(3/17) Ω which we found long ago has not changed.

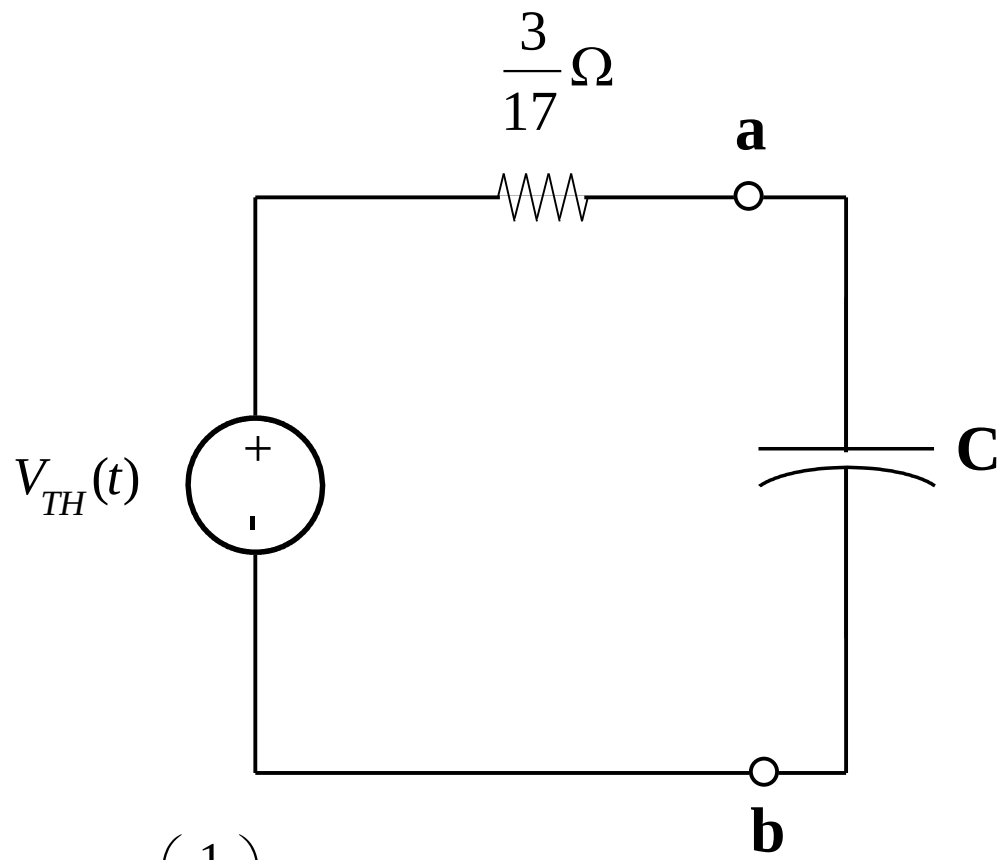

$$V_{TH}(t)=\left(\frac{1}{17}\right)\left[8V_s(t)+(2\Omega)I_s(t)\right]$$

Numeric Example

- Now assume C=17μF
- $V_s(t)$=17 u(t) V
- $I_s(t)$=17 u(t-6μs) A

$$V_{TH}(t)=\left[8u(t)+2u(t-6\mu s)\right]$$

$$RC=\tau=\left(\frac{3}{17}\Omega\right)17\mu F=3\mu s$$

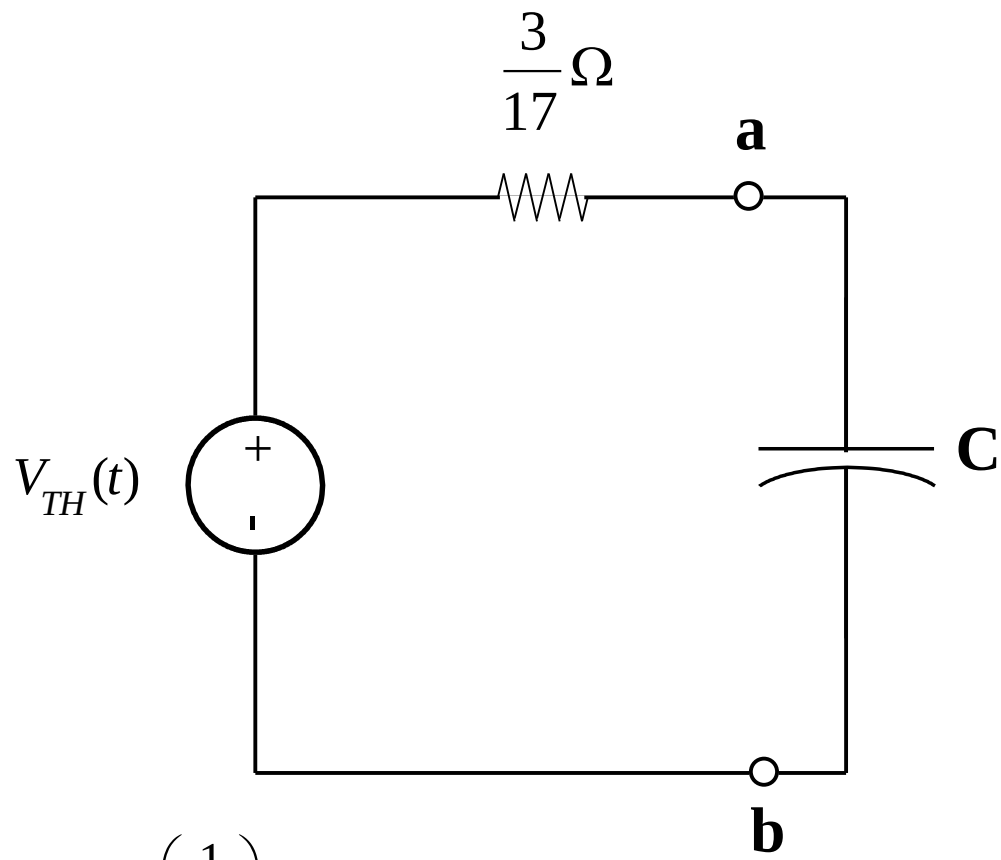

$$V_{TH}(t)=\left(\frac{1}{17}\right)\left[8V_s(t)+(2\Omega)I_s(t)\right]$$

Numeric Example

$$V_{TH}(t) = \left[8u(t) + 2u(t - 6\mu s)\right] \qquad RC = \tau = \left(\frac{3}{17}\Omega\right)17\mu F = 3\mu s$$

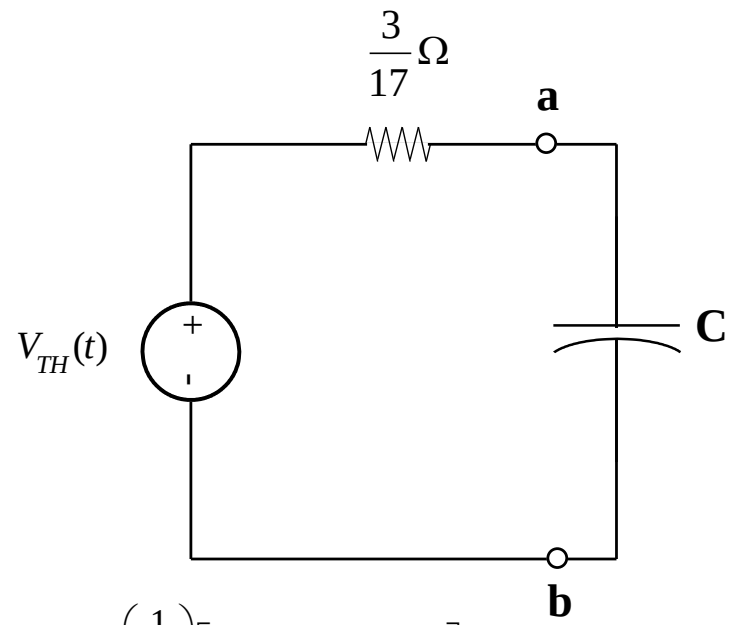

$$V_{TH}(t) = \left(\frac{1}{17}\right)\left[8V_s(t) + (2\Omega)I_s(t)\right]$$

Numeric Example

$$V_{TH}(t) = \left[8u(t) + 2u(t - 6\mu s)\right] \qquad RC = \tau = \left(\frac{3}{17}\Omega\right)17\mu F = 3\mu s$$

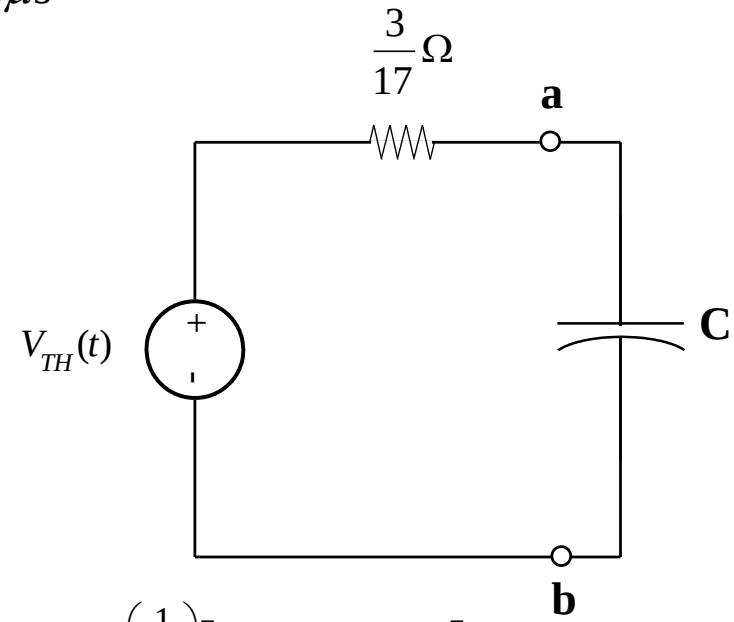

$$V_{TH}(t) = \left(\frac{1}{17}\right)\left[8V_s(t) + (2\Omega)I_s(t)\right]$$

Numeric Example

Numeric Example: Superposition

$$V_{TH}(t) = \left[8u(t) + 2u(t - 6\mu s)\right]$$

$$RC = \tau = \left(\frac{3}{17}\Omega\right)17\mu F = 3\mu s$$

$$(t < 0) \quad V_c(t) = 0$$

$$(0 \le t < 6\mu s)$$

$$V_{c1}(t) = 8\left(1 - e^{-t/\tau}\right)u(t) \ \ V$$

$$(t \ge 6\mu s)$$

$$V_{c2}(t) = 2\left(1 - e^{-(t - 6\mu s)/\tau}\right)u(t - 6\mu s) \ \ V$$

$$V_c(t) = V_{c1}(t) + V_{c2}(t)$$

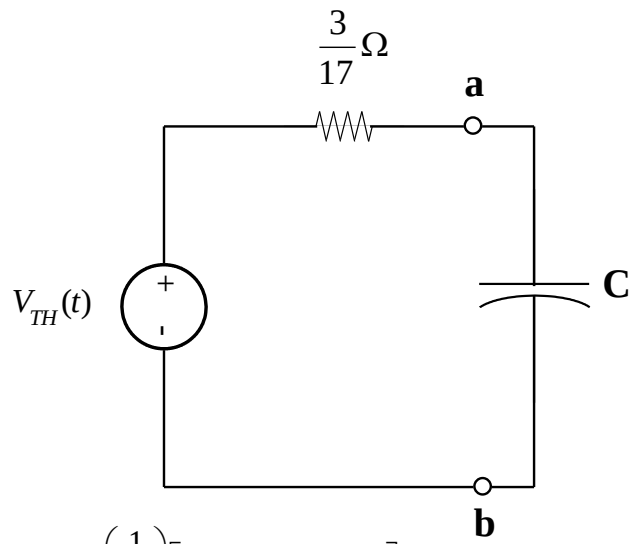

$$V_{TH}(t) = \left(\frac{1}{17}\right)\left[8V_s(t) + (2\Omega)I_s(t)\right]$$

Numeric Example: Superposition

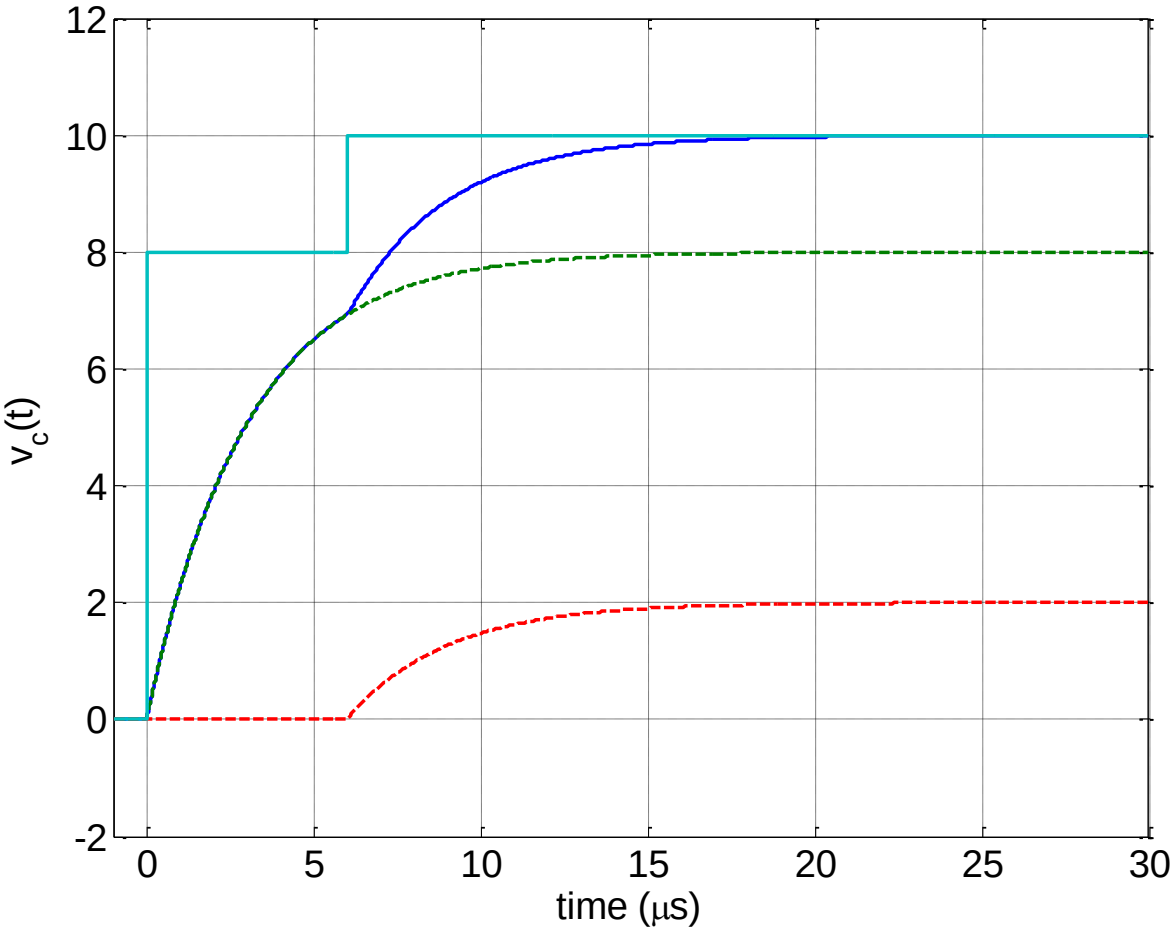

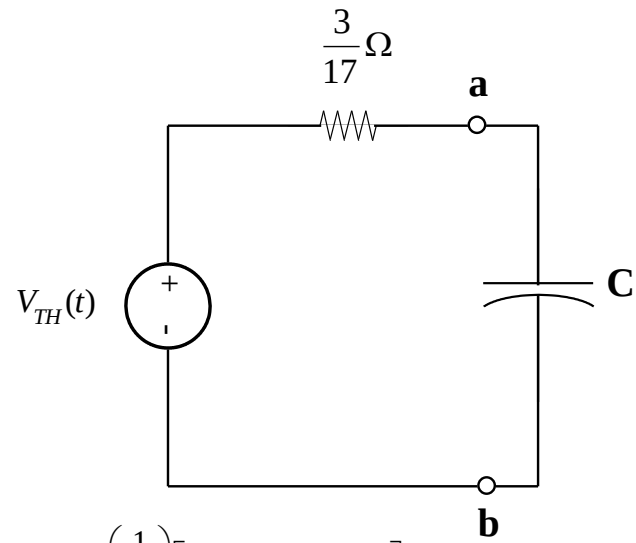

$$V_{TH}(t)=\left(\frac{1}{17}\right)\left[8V_s(t)+(2\Omega)I_s(t)\right]$$

Numeric Example: BC Matching

$$V_{TH}(t) = \left[8u(t) + 2u(t - 6\mu s)\right]$$

$$RC = \tau = \left(\frac{3}{17}\Omega\right)17\mu F = 3\mu s$$

$$(t < 0) \quad V_c(t) = 0$$

$$(0 \le t < 6\mu s)$$

$$V_c(t) = 8\left(1 - e^{-t/\tau}\right)V$$

$$(t \ge 6\mu s)$$

$$V_c(6\mu s) = 8\left(1 - e^{-6\mu s/\tau}\right)V = 8\left(1 - e^{-2}\right)V \quad \textit{New Initial Condition}$$

$$V_c(6\mu s) \equiv V_{C1} \approx 6.9173V$$

$$V_c(t \to \infty) = 10V \quad \textit{New Forced Solution}$$

$$V_c(6\mu s) = V_{C1} = 10V + Ae^{-(t-6\mu s)/\tau} \to A = \left(V_{C1} - 10V\right)$$

$$V_c(t) = \left[10 - \left(10 - V_{C1}\right)e^{-(t-6\mu s)/3\mu s}\right]V \approx \left[10 - 3.0827e^{-(t-6\mu s)/3\mu s}\right]V$$

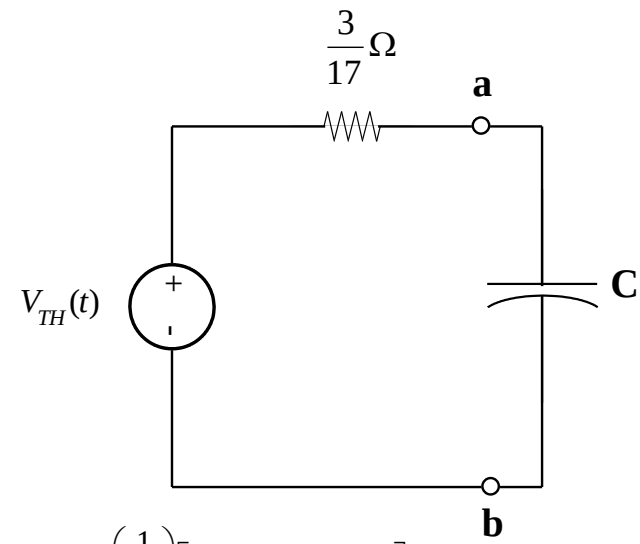

$$V_{TH}(t) = \left(\frac{1}{17}\right)\left[8V_s(t) + (2\Omega)I_s(t)\right]$$

Numeric Example

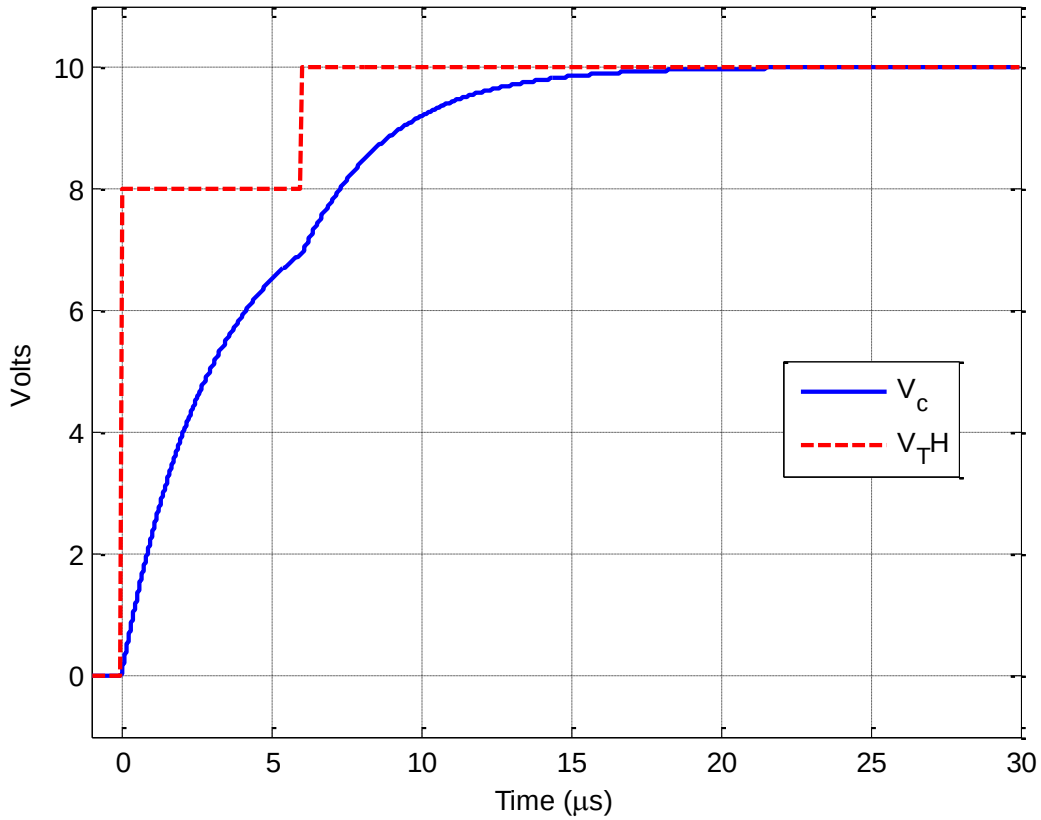

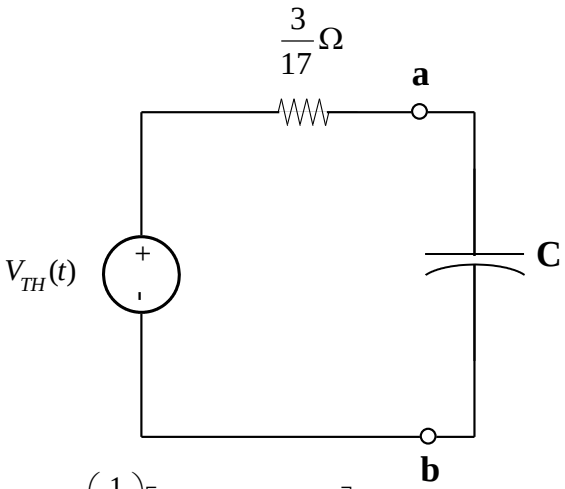

$$V_{TH}(t)=\left(\frac{1}{17}\right)\left[8V_s(t)+(2\Omega)I_s(t)\right]$$

Inductor Circuit Step Response

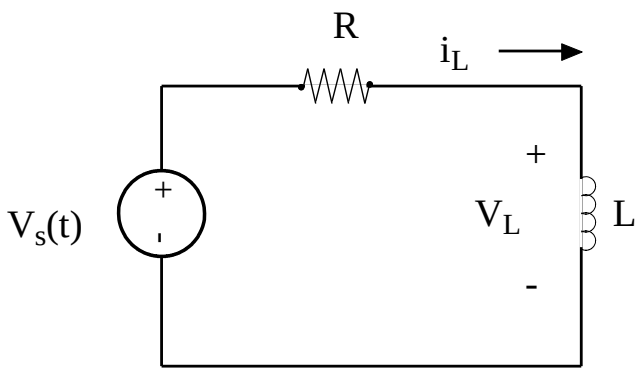

Inductor Circuit Step Response

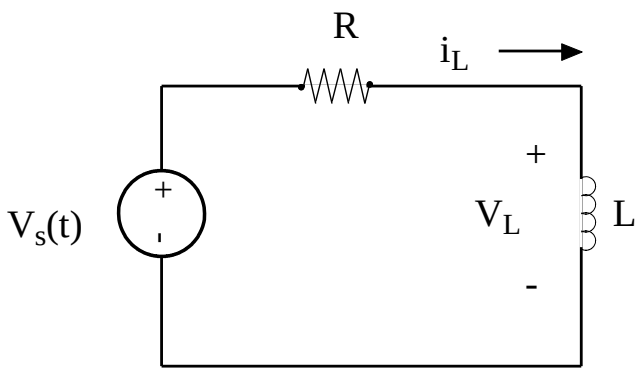

Inductor Circuit Step Response

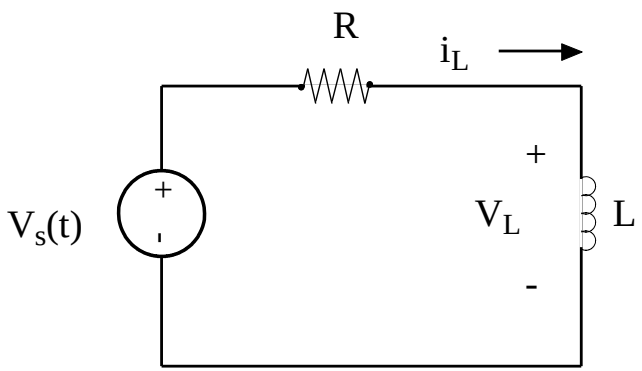

Time Varying forcing Function

- For a 1st order ODE with a time varying forcing function f(t)
  - Try Forced Solutions of the form Af(t)+Bf'(t)
  - Plug in to ODE and find A, B
- For a 2nd order ODE (SOC) with a time varying forcing function f(t)
  - Try Forced Solutions of the form Af(t)+Bf' (t)+Cf'' (t)
  - Plug in to ODE and find A, B, C

Example: Ramp Into Inductor

Assume

$$V_s(t) = V_0 + (At)u(t)$$

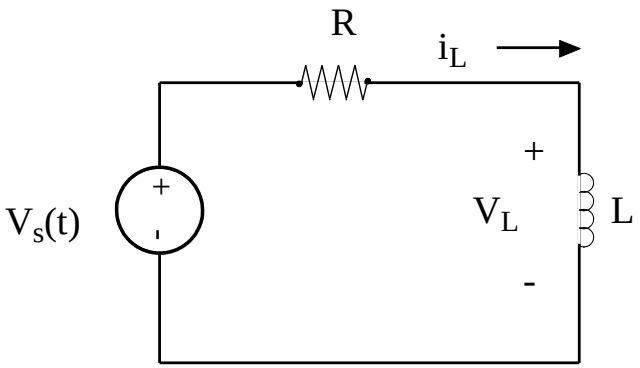

Voltage Ramp Starting at t=0

Find Initial Condition

Example: Ramp Into Inductor

Assume

$$V_s(t) = V_0 + (At)u(t)$$

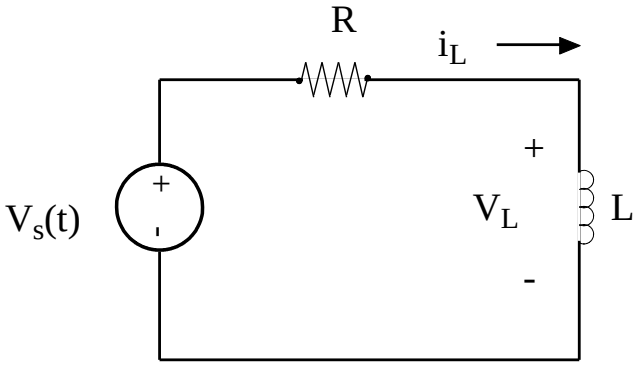

Differential Equation:

$$V_s(t) = RI_L + V_L$$

$$= RI_L + L\frac{\partial I_L}{\partial t}$$

$$RI_L + L\frac{\partial I_L}{\partial t} = (V_0 + At) \quad \forall t \geq 0$$

Example: Ramp Into Inductor

Assume

$$V_s(t) = V_0 + (At)u(t)$$

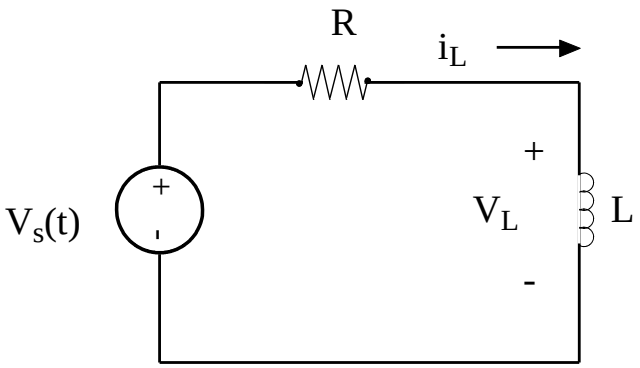

Natural Solution Unchanged:

$$RI_L + L\frac{\partial I_L}{\partial t} = 0 \rightarrow I_{Ln}(t) = Be^{-t/\tau}$$

$$\tau = L/R$$

What is Forced Solution?
It is no longer constant with time

Example: Ramp Into Inductor

Assume

$$V_s(t) = V_0 + (At)u(t)$$

Forced Solution of:

$$RI_L + L\frac{\partial I_L}{\partial t} = (V_0 + At) \quad \forall t \geq 0$$

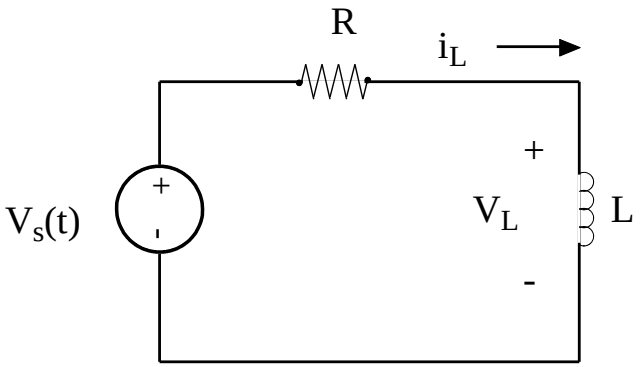

Example: Ramp Into Inductor

Assume

$$V_s(t) = V_0 + (At)u(t)$$

Complete Solution and Match Initial Conditions

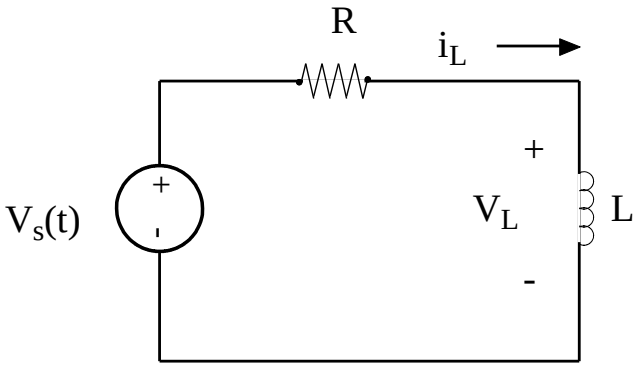

Numerical Example: Ramp Into Inductor

Assume

$$V_s(t) = V_0 + (At)u(t)$$

$$I_{Lf} = D + Ft$$

$$I_{Ln} = Be^{-tR/L}$$

$$I_L(t) = \frac{1}{R}(V_0 + At) + \frac{LA}{R^2}\left(e^{-tR/L} - 1\right)$$

Let :

$$V_0 = 1V \quad A = 10^7\, V/s$$

$$\left\{\begin{matrix} L = 1mH \\ R = 10K\Omega \end{matrix}\right\} \rightarrow \tau = 0.1\mu s \;\&\; \frac{V_0}{R} = 0.1mA$$

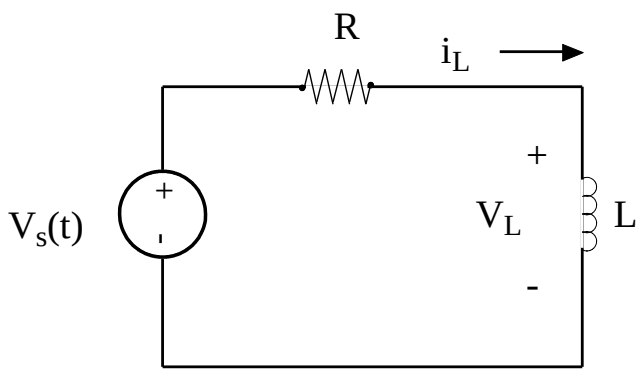

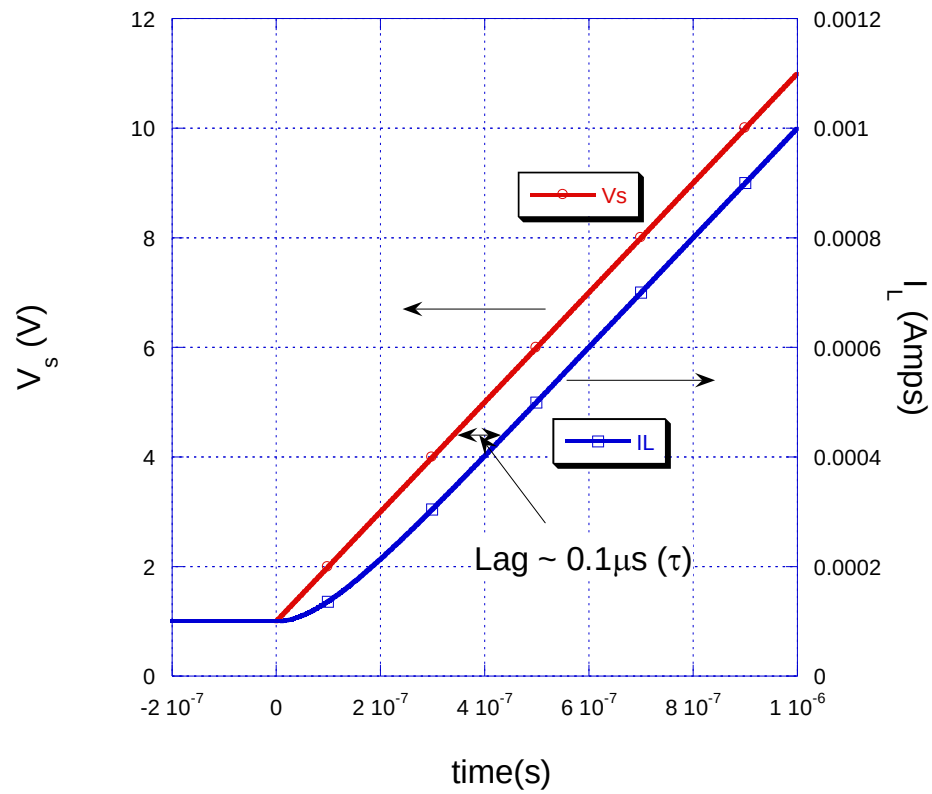

Numerical Example: Cosine Wave into RC

$$V_s(t) = V_0 \cos(\omega t) u(t)$$

$$V_C + RC \frac{\partial V_C}{\partial t} = V_s(t) = V_0 \cos(\omega t) u(t)$$

$$\frac{\partial V_C}{\partial t} + \frac{V_C}{\tau} = \frac{V_0}{\tau} \cos(\omega t) \quad \forall t \geq 0 \ , \ \tau = RC$$

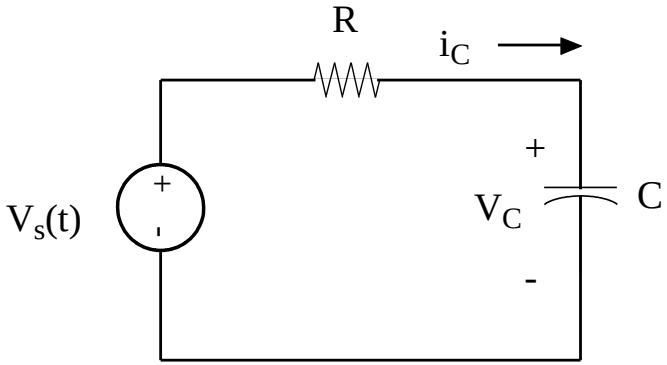

Initial Condition:

Natural Solution:

Numerical Example: Cosine Wave into RC

Forced Solution:

$$V_s(t) = V_0 \cos(\omega t) u(t)$$

$$V_C + RC \frac{\partial V_C}{\partial t} = V_s(t) = V_0 \cos(\omega t) u(t)$$

$$\frac{\partial V_C}{\partial t} + \frac{V_C}{\tau} = \frac{V_0}{\tau} \cos(\omega t) \quad \forall t \geq 0 \ , \ \tau = RC$$

Numerical Example: Cosine Wave into RC

$$V_s(t) = V_0 \cos(\omega t) u(t)$$

$$V_C + RC \frac{\partial V_C}{\partial t} = V_s(t) = V_0 \cos(\omega t) u(t)$$

$$\frac{\partial V_C}{\partial t} + \frac{V_C}{\tau} = \frac{V_0}{\tau} \cos(\omega t) \quad \forall t \geq 0 \ , \ \tau = RC$$

Complete Solution:

$$V_C = \left[\frac{V_0}{1 + (\omega\tau)^2} \right] \left[\cos(\omega t) + (\omega\tau) \sin(\omega t) \right] + A e^{-t/\tau}$$

Match Initial Conditions for Complete Solution:

Numerical Example: Cosine Wave into RC

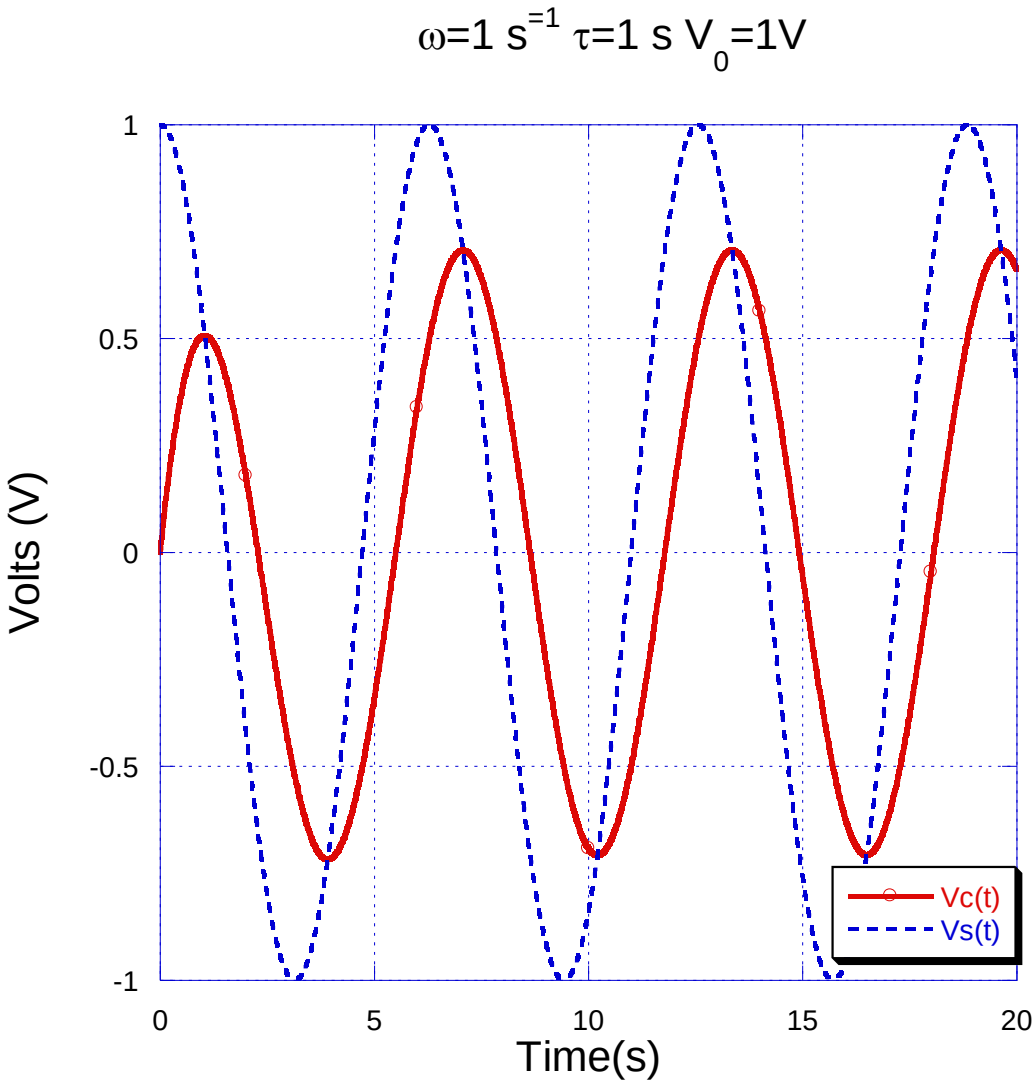

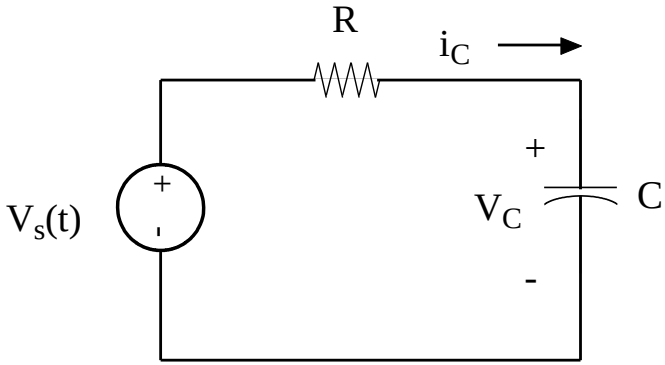

Numerical Example: Cosine Wave into RC

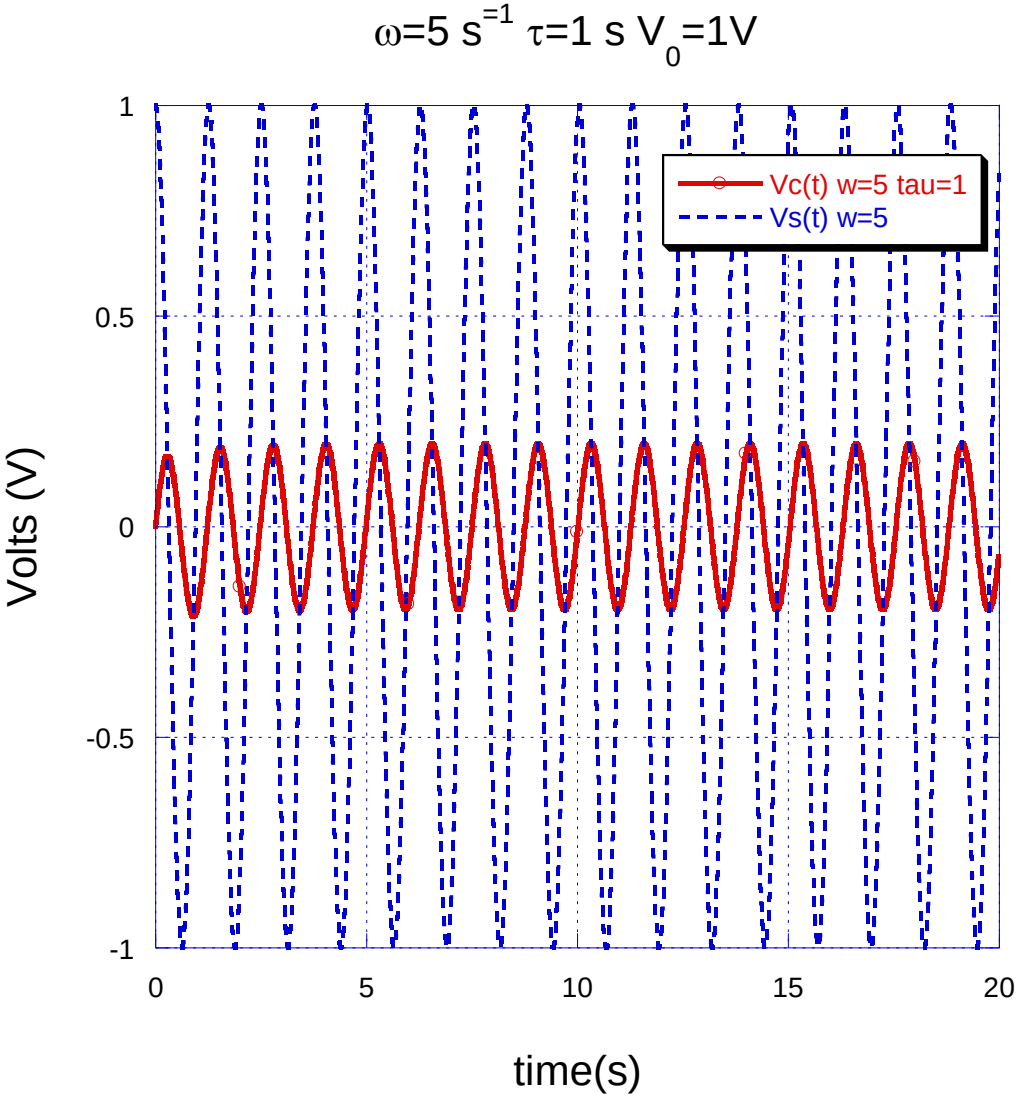

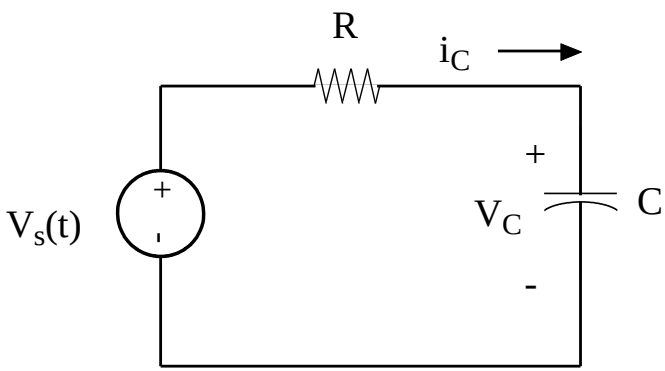

Numerical Example: Cosine Wave into RC

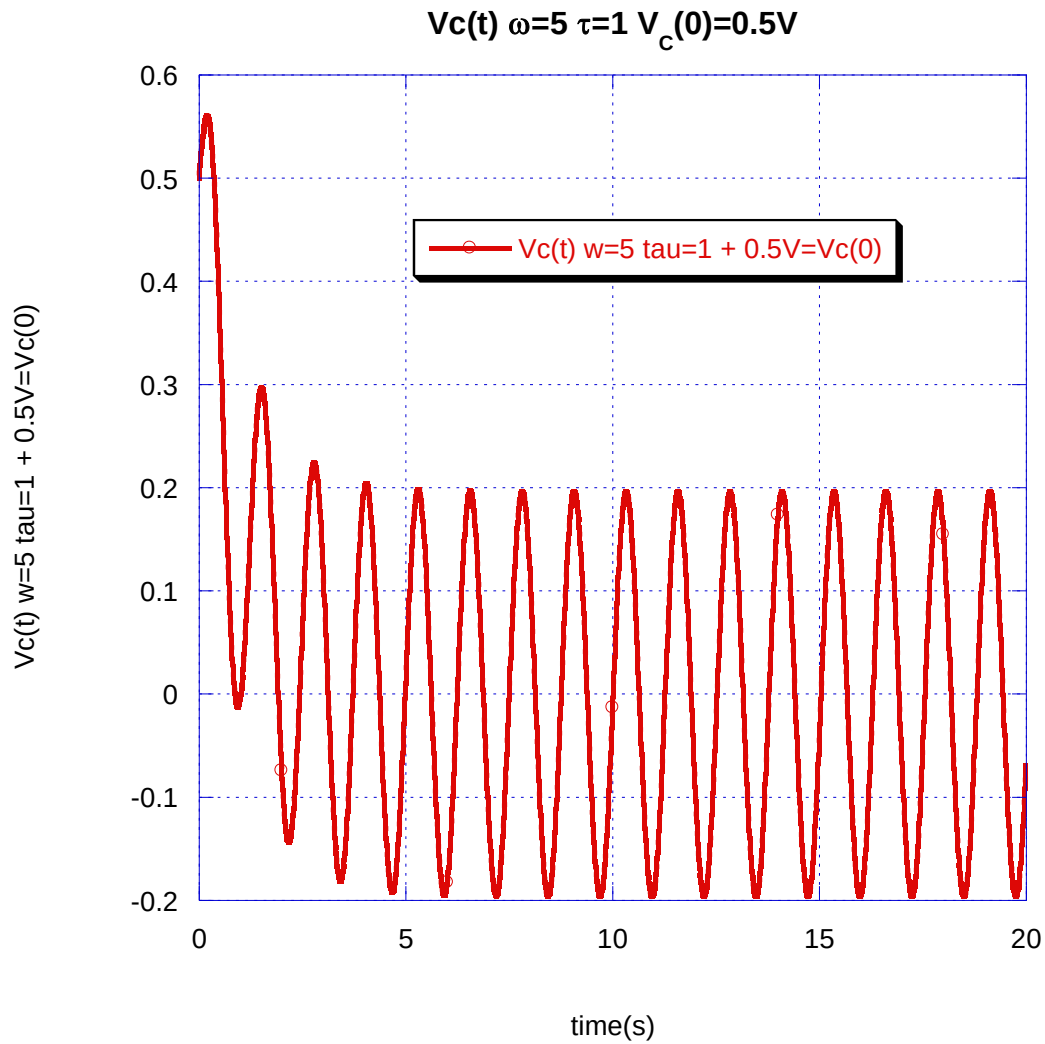

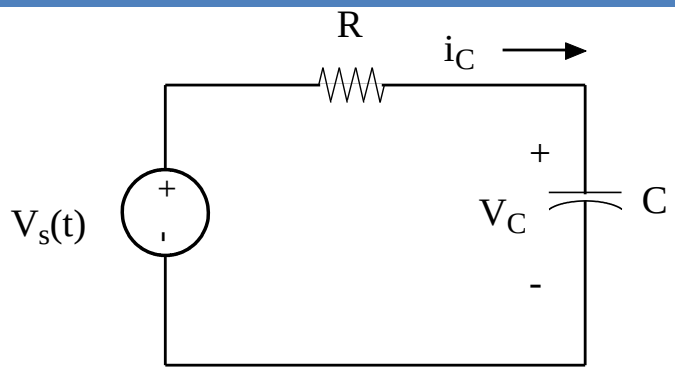

Op-Amp Example

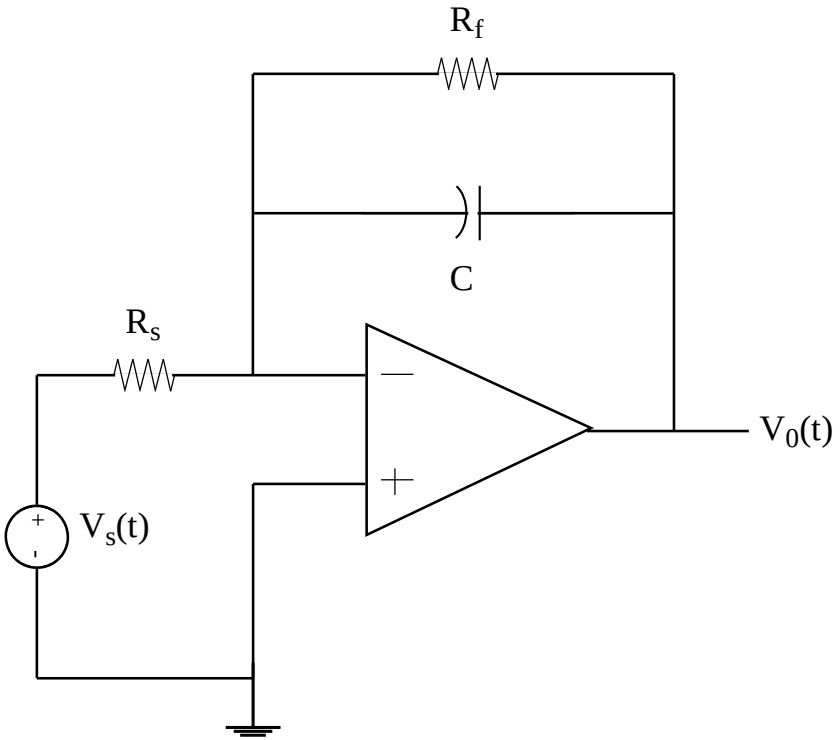
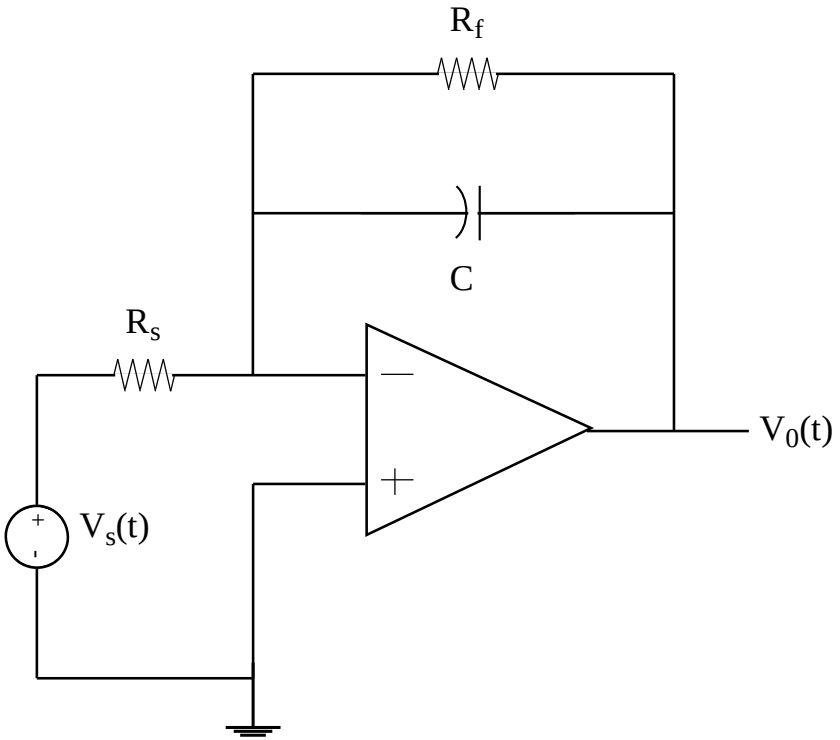
Op-Amp Example