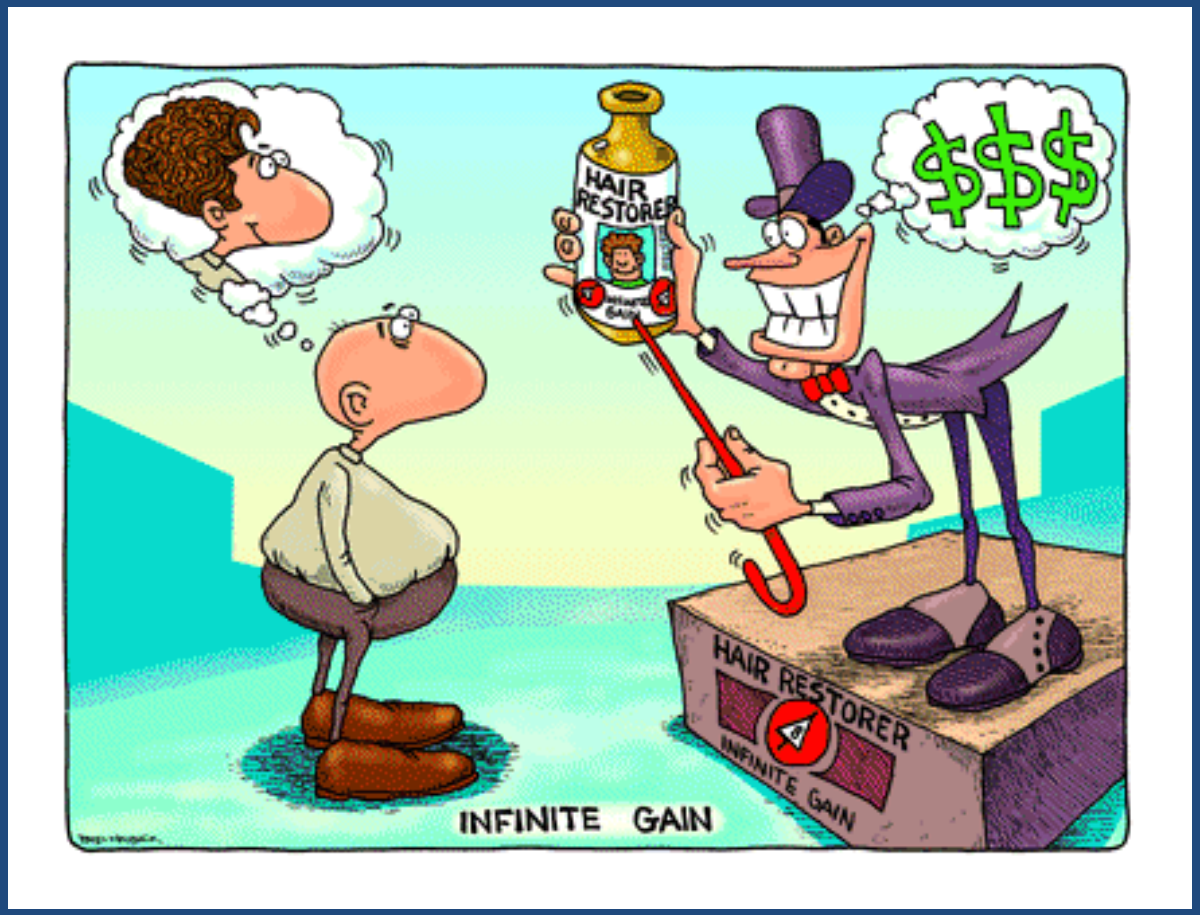

ACTIVE DEVICES AND CIRCUITS: OP-AMPS

© Fred Terry
Fall, 2013

Active Devices

- Linearly Amplify Signals
- Construction of Signal Processing Electronics
  - Filters
- Non-linear Functions
  - Digital Logic
  - Signal Multiplication (mixing)
  - Power Conditions (DC-DC Conversion, Power Factor Correction)
- We Will First Look at Operational Amplifiers (Op-amps)
- Then We Will Take A Brief Look at Transistor Concepts

Key Concept: High Gain Amplifier with Negative Feedback

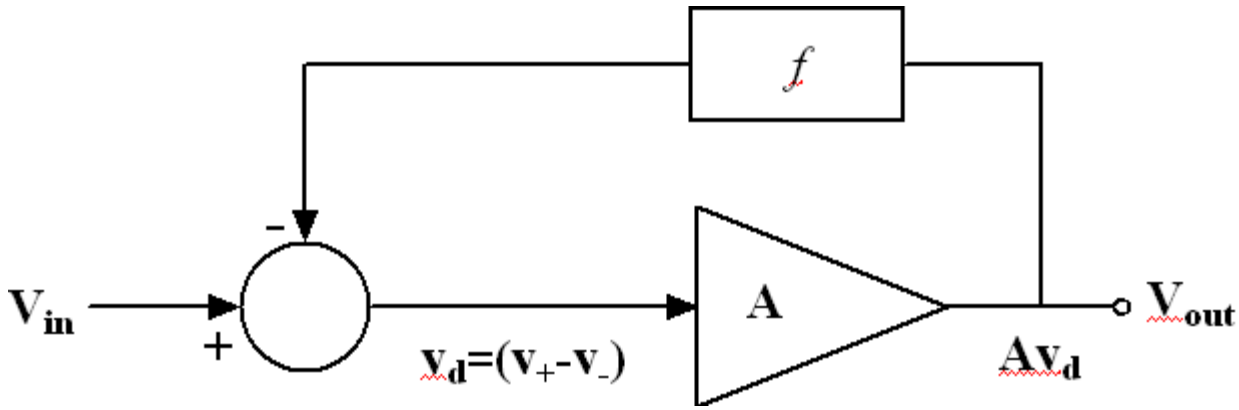

System View of Non-inverting amplifier

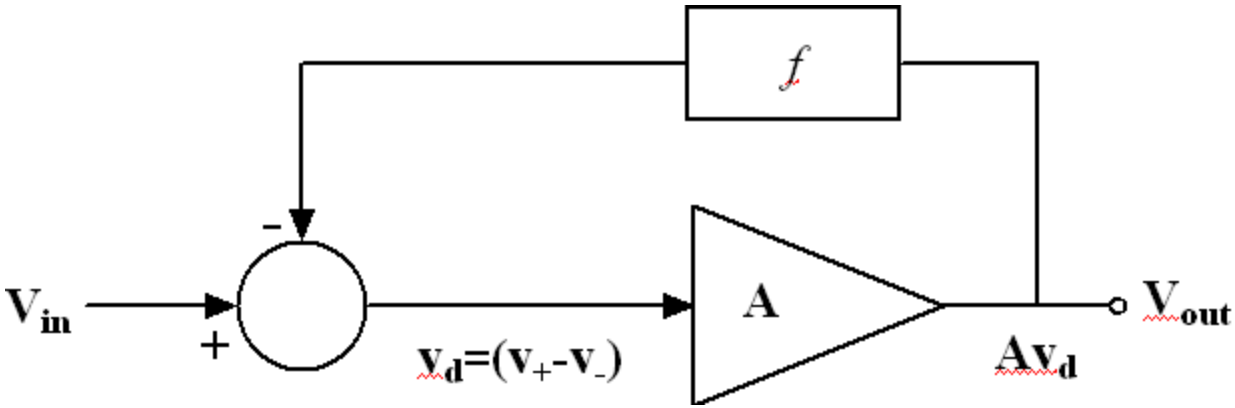
f
-
+
Vin
A
Vout
vd=(v+-v-)
Avd

Key Concept: High Gain Amplifier with Negative Feedback

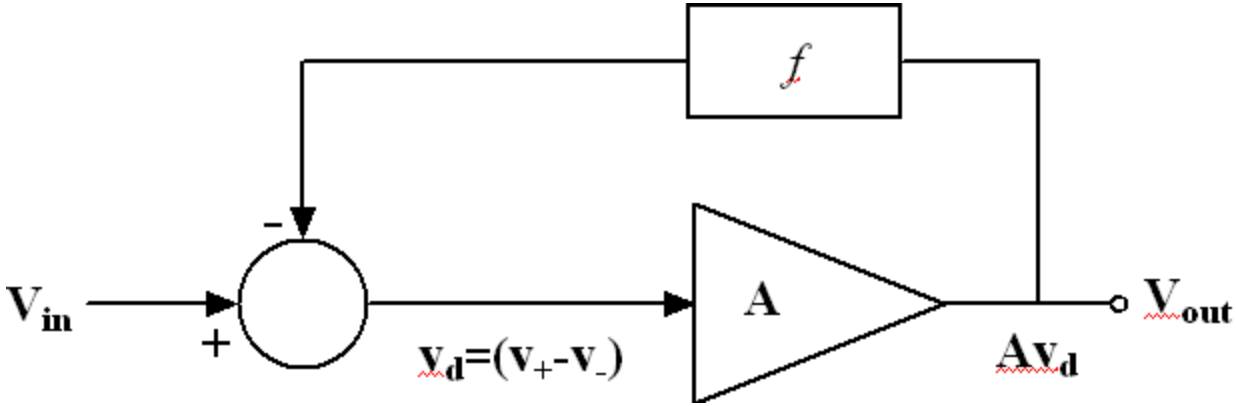

$$\left.\begin{aligned} v_o &= \left(\frac{A}{1+Af}\right)v_{in} \rightarrow \left(\frac{1}{f}\right)v_{in} \\ v_d &= \left(\frac{1}{1+Af}\right)v_{in} \rightarrow 0 \end{aligned}\right\} Af \gg 1$$

Closed Loop Amplifier is Linear even if $A(v_d)$ is not constant as long as A is big enough!

Operational Amplifier "Op Amp"

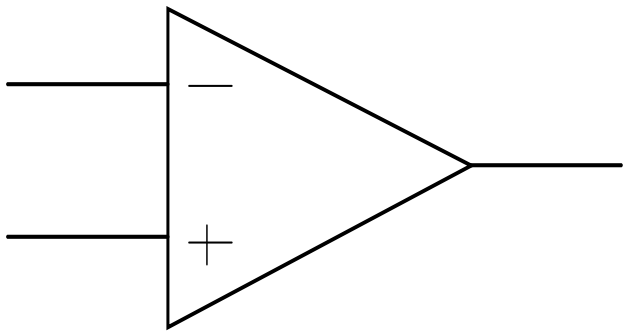

- Behaves like a voltage controlled voltage source (VCVS)
- Active circuit designed for math, analog computation
- Commonly used for analog signal processing

Operational Amplifier "Op Amp"

- Two input terminals, inverting and non-inverting
- One output
- Power supply V^+, V^-
- Offset null to "zero" device

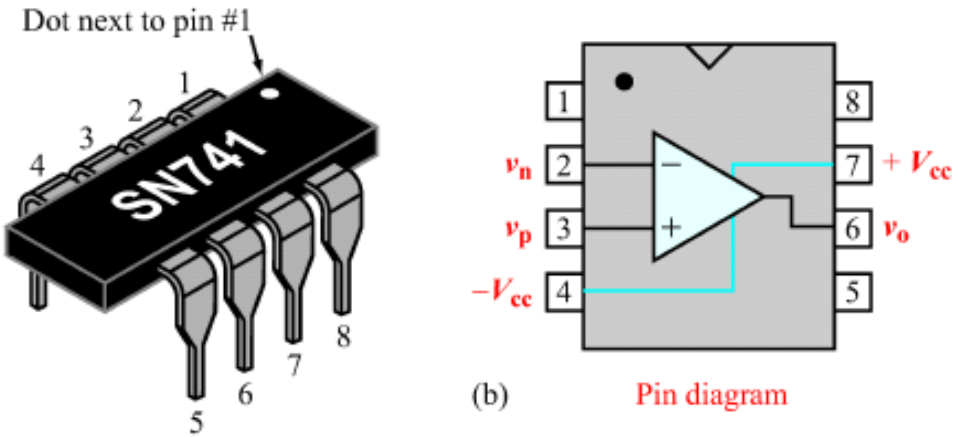

Op Amp showing power supply

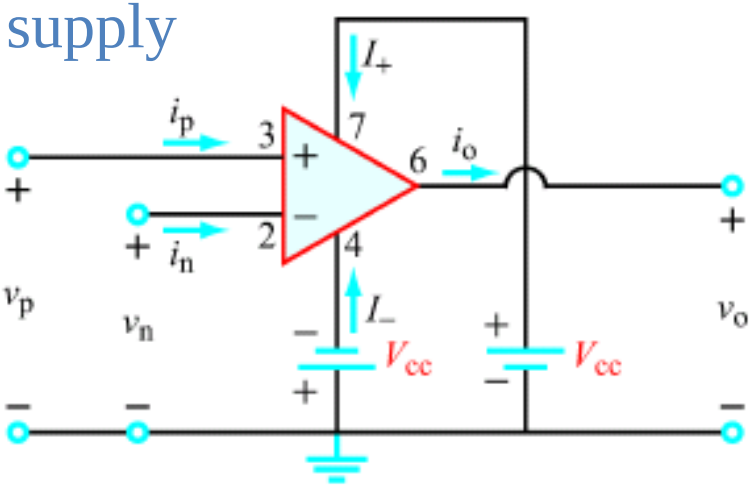

Op Amp (power supply not shown, how we typically analyze circuit)

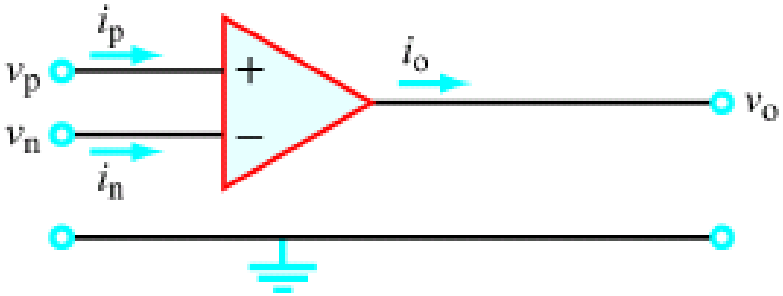

Op Amps: "Real"

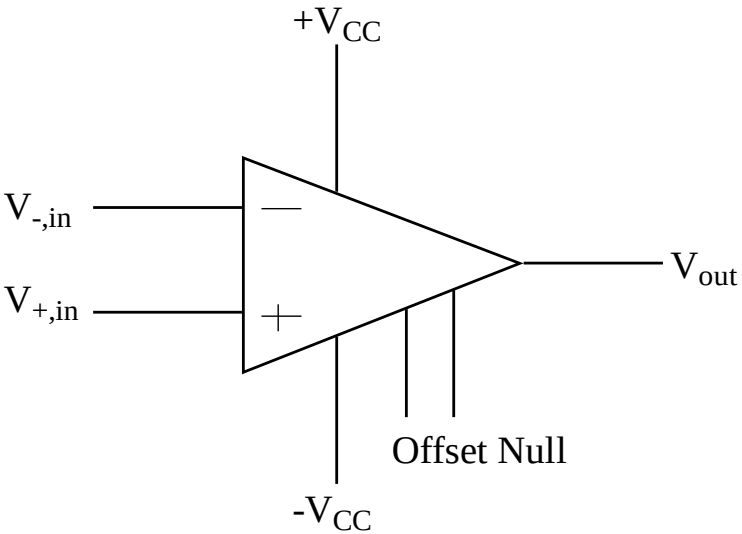

Model for Real Op-Amp

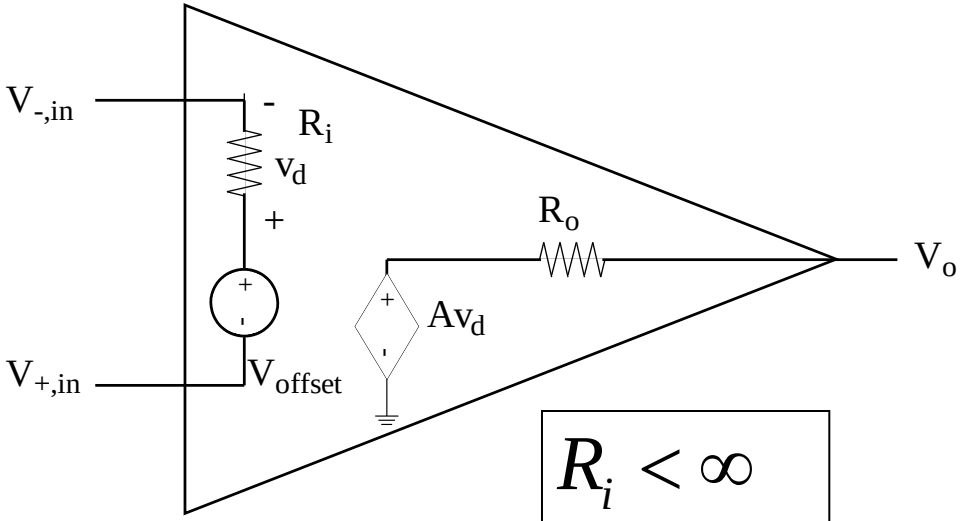

Typical 741 Specs

$R_i \sim 2M\Omega$

$A \sim 2x10^5$

$R_o \sim 75\Omega$

$V_{offset} \sim 2-6mv$

$$R_i < \infty$$

$$V_{offset} \neq 0$$

$$A < \infty$$

$$R_o > 0$$

741 Basic Topology

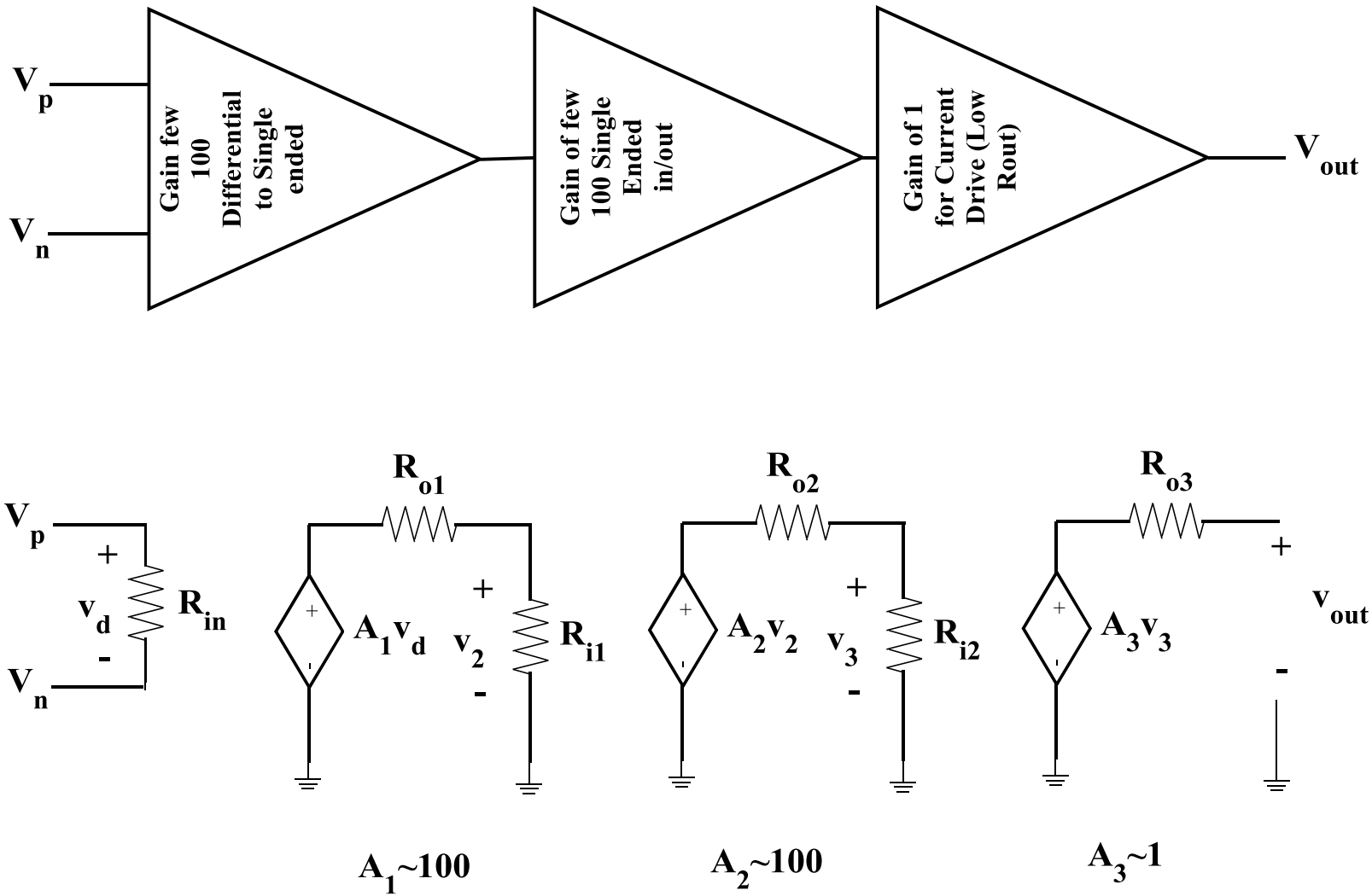

741 Op-Amp Circuit Diagram

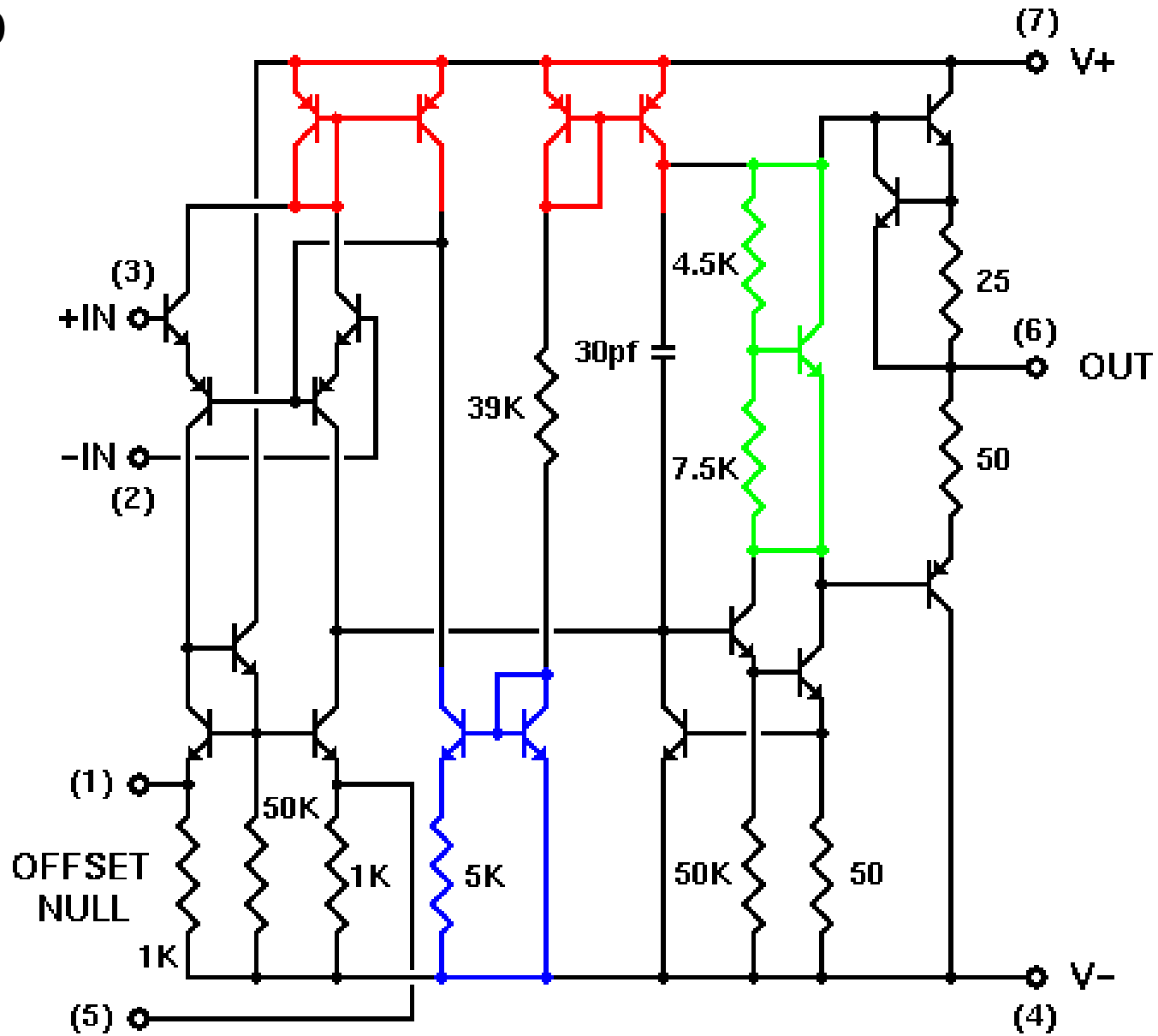

Inside The Op-Amp (741)

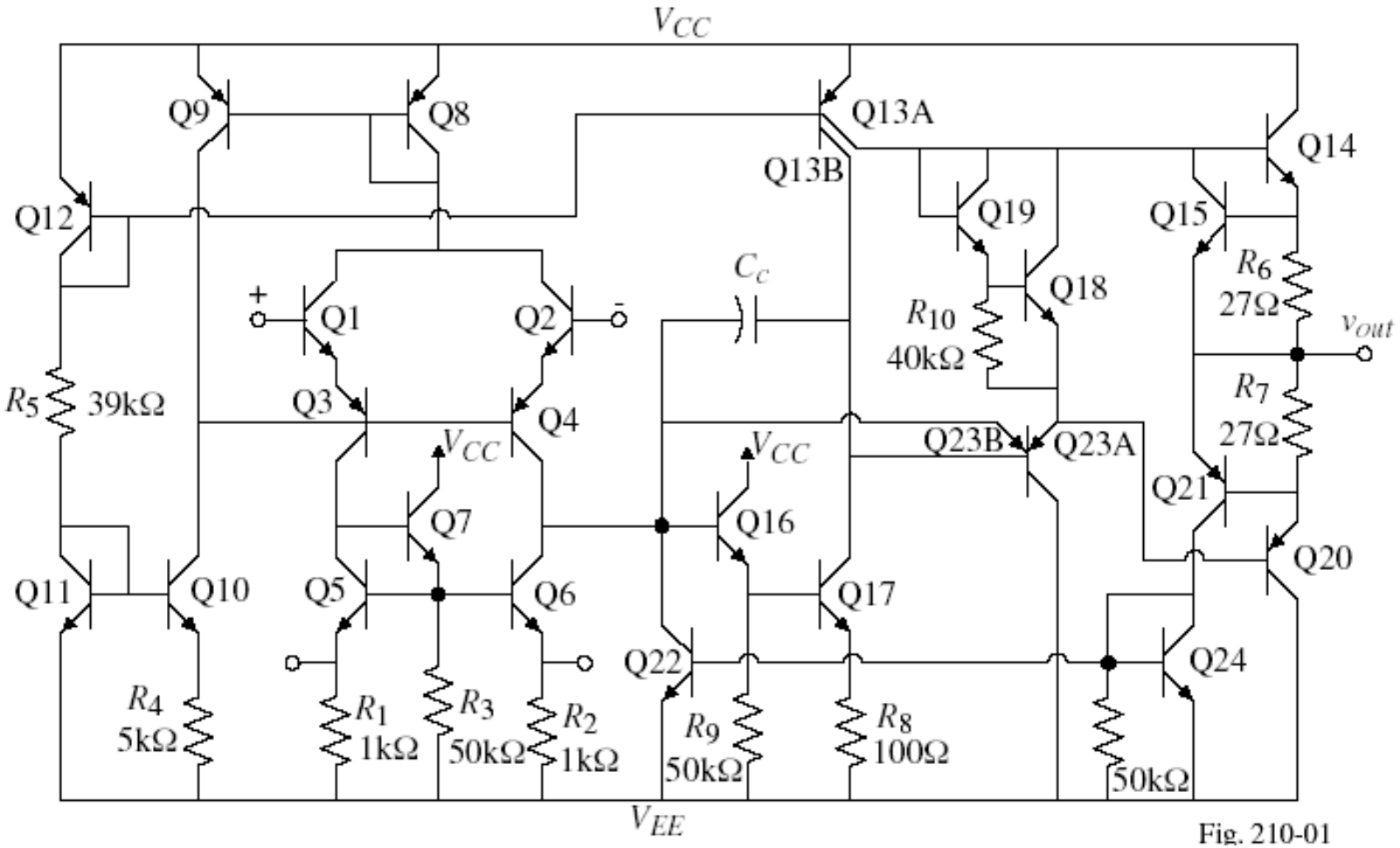

Fig. 210-01

Ideal Op-Amp

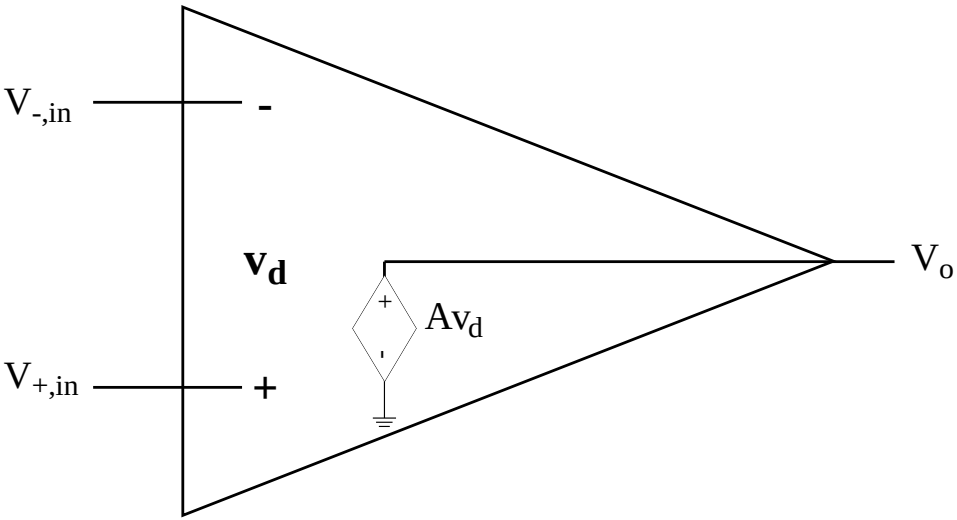

$$R_i \to \infty$$

$$V_{offset} = 0$$

$$A \to \infty$$

$$R_o = 0$$

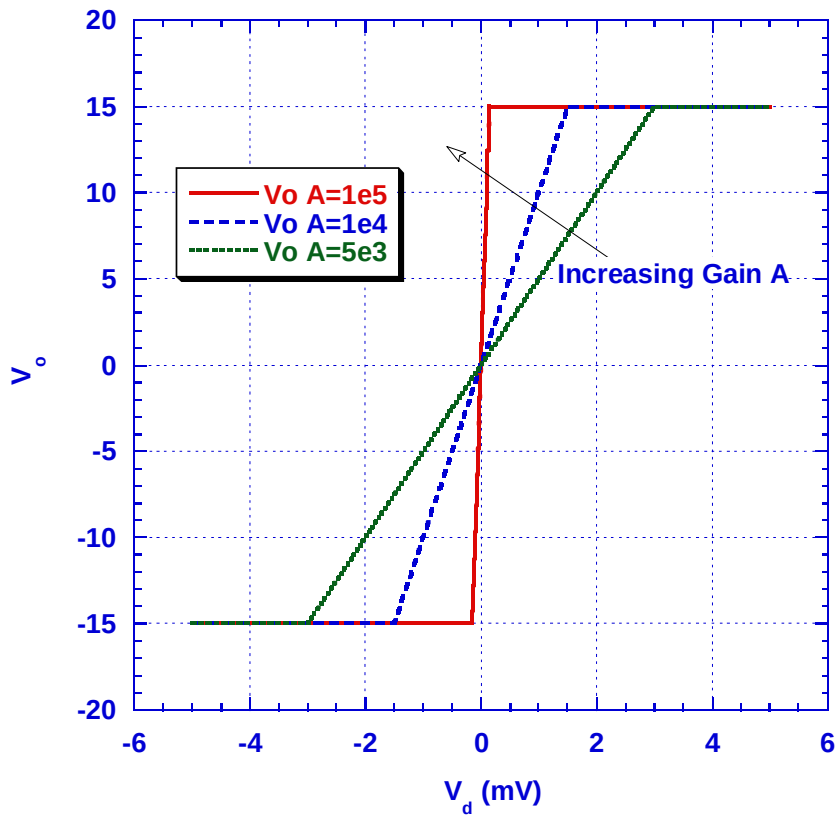

Non-Inverting Op-Amp

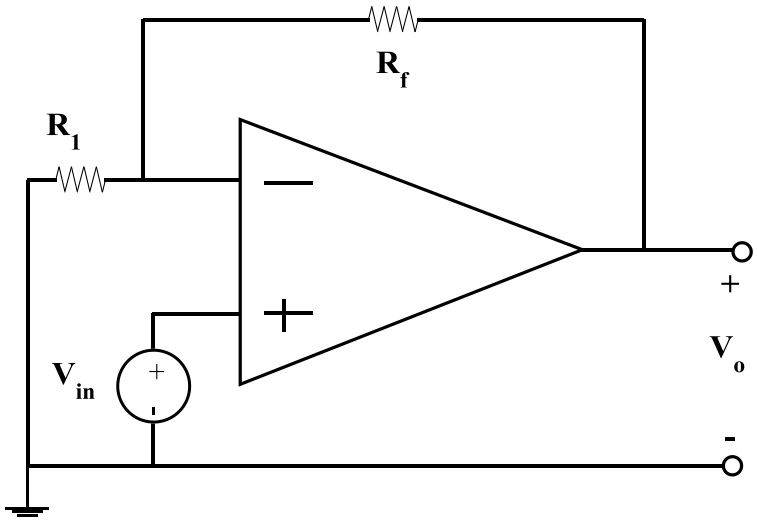

Most often drawn this way:

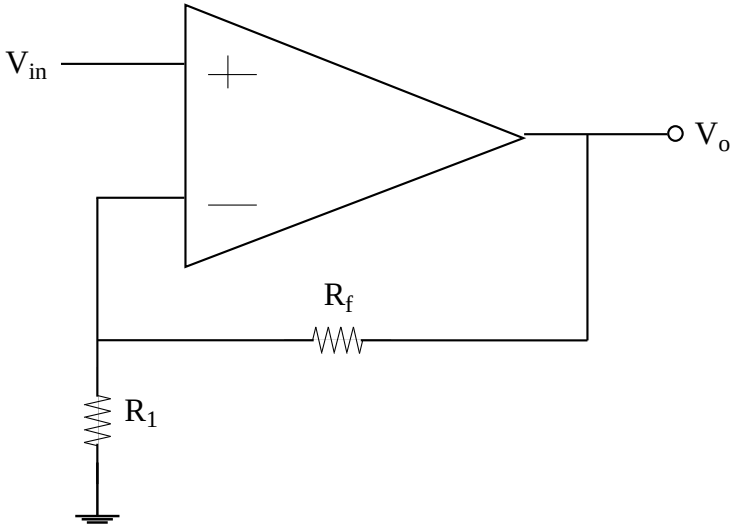

Nodal Analysis: Noninverting Opamp

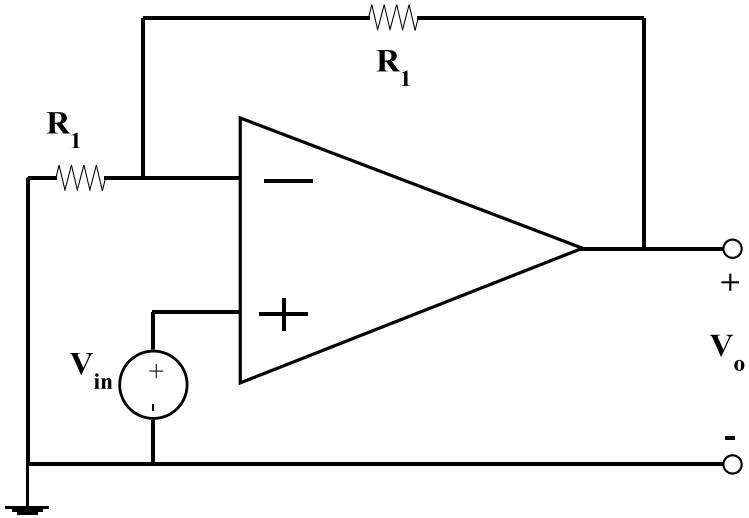

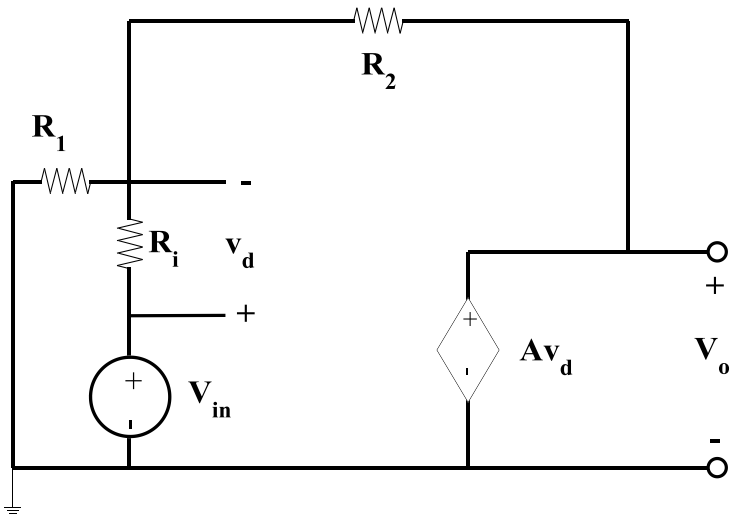

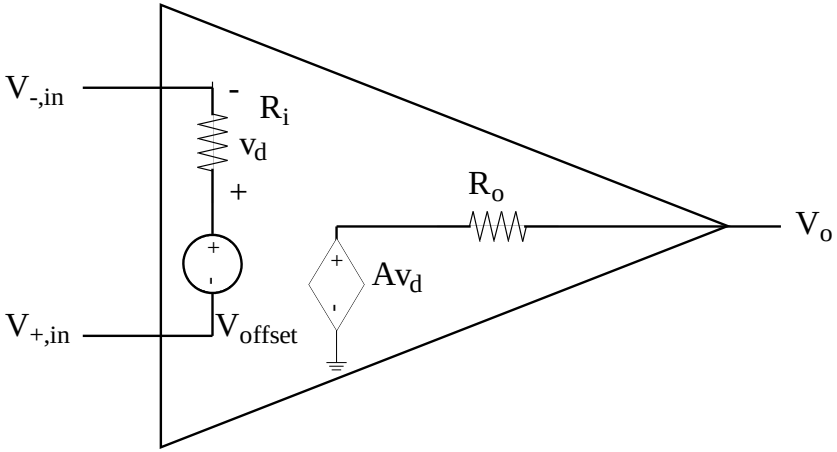

Concept of Replacing Real Device with Circuit *Model*

Nodal Analysis: Noninverting Opamp

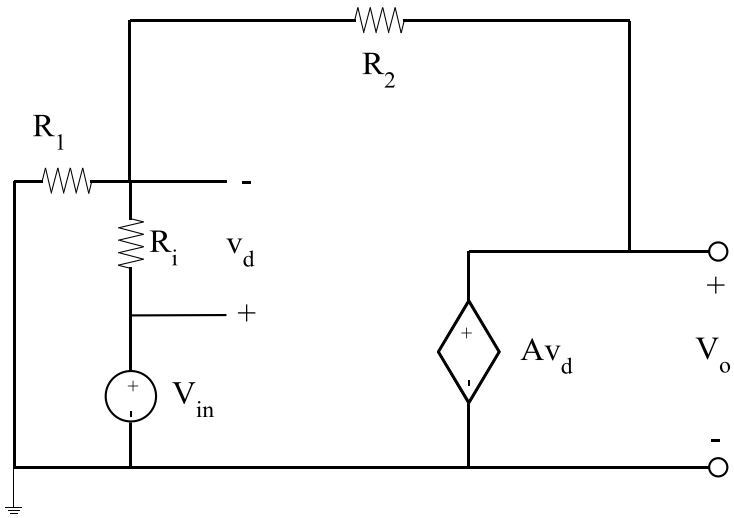

Nodal Analysis: Noninverting Opamp

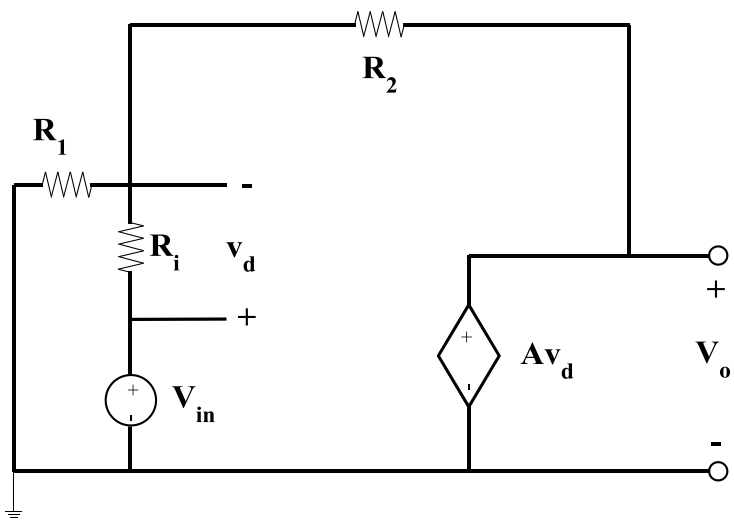

$$v_n = \left[\frac{R_1 \left(R_2 + AR_i \right)}{R_1 R_2 + \left(\left(A+1 \right) R_1 + R_2 \right) R_i} \right] v_{in}$$

$$v_d = \left[\frac{\left(R_1 + R_2 \right) R_i}{R_1 R_2 + \left(\left(A+1 \right) R_1 + R_2 \right) R_i} \right] v_{in}$$

$$v_o = \left[\frac{A \left(R_1 + R_2 \right) R_i}{R_1 R_2 + \left(\left(A+1 \right) R_1 + R_2 \right) R_i} \right] v_{in}$$

$$R_{in,eff} = \frac{v_{in}}{i_{in}} = \frac{v_{in}}{\left(v_d / R_i \right)} = \frac{v_{in}}{v_d} R_i = \left[\frac{R_1 R_2 + \left(\left(A+1 \right) R_1 + R_2 \right) R_i}{\left(R_1 + R_2 \right) R_i} \right] R_i$$

Large A Limits

$$v_n = \left[\frac{R_1\left(R_2 + AR_i\right)}{R_1R_2 + \left(\left(A+1\right)R_1 + R_2\right)R_i}\right]v_{in} \rightarrow v_{in}$$

$$v_d = \left[\frac{\left(R_1 + R_2\right)R_i}{R_1R_2 + \left(\left(A+1\right)R_1 + R_2\right)R_i}\right]v_{in} \rightarrow 0$$

$$v_o = \left[\frac{A\left(R_1 + R_2\right)R_i}{R_1R_2 + \left(\left(A+1\right)R_1 + R_2\right)R_i}\right]v_{in} \rightarrow \left[\frac{\left(R_1 + R_2\right)}{R_1}\right]v_{in} = \left[1 + \frac{R_2}{R_1}\right]v_{in}$$

$$R_{in,eff} = \frac{v_{in}}{i_{in}} = \frac{v_{in}}{\left(v_d / R_i\right)} = \frac{v_{in}}{v_d}R_i = \left[\frac{R_1R_2 + \left(\left(A+1\right)R_1 + R_2\right)R_i}{\left(R_1 + R_2\right)R_i}\right]R_i$$

$$\rightarrow \left[\frac{A}{\left(1 + \frac{R_2}{R_1}\right)}\right]R_i = \left[\frac{open\,loop\,gain}{closed\,loop\,gain}\right]R_i \rightarrow \infty$$

Op-Amp "Golden Rules"

- The last circuit was an example of <u>negative feedback</u>
- Under Negative Feedback Operation, we treat an ideal op-amp circuit with the following "golden" rules:

$$V_{in}^{+} = V_{in}^{-} \rightarrow v_d = \left(V_{in}^{+} - V_{in}^{-}\right) = 0$$

$$i_{in}^{+} = 0 = i_{in}^{-}$$

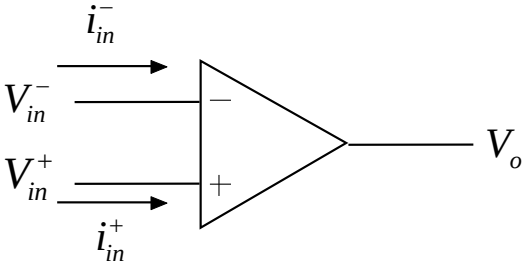

Ideal Op-Amp Analysis: *Use Nodal Analysis at Inputs*

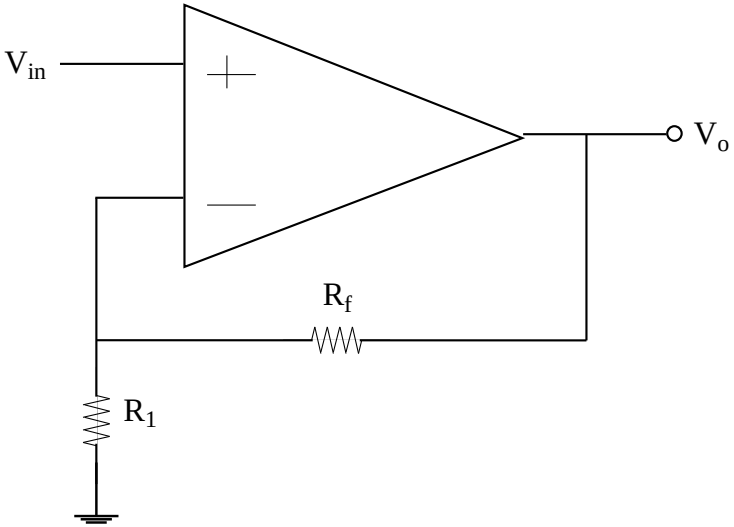

Golden Rule Analysis

$$V_+ = V_{in}$$

$$V_- = \left[\frac{R_1}{R_1 + R_f}\right] V_o$$

$$V_- = V_+ = V_{in}$$

$$\left[\frac{V_o}{V_{in}}\right] = \left[\frac{R_1 + R_f}{R_1}\right] = \left[1 + \left(R_f / R_1\right)\right]$$

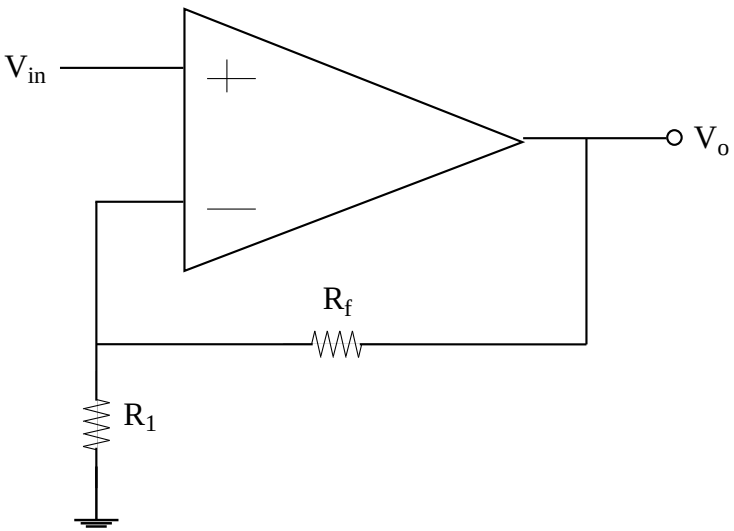

Special Case: Follower

$$R_f \to 0$$

$$R_1 \to \infty$$

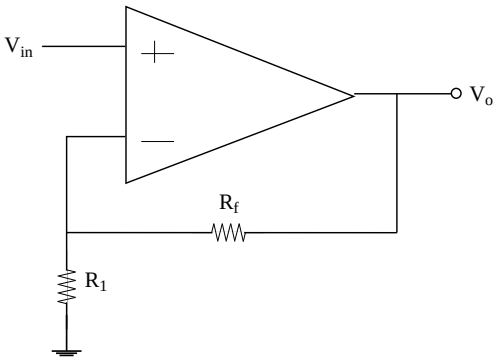

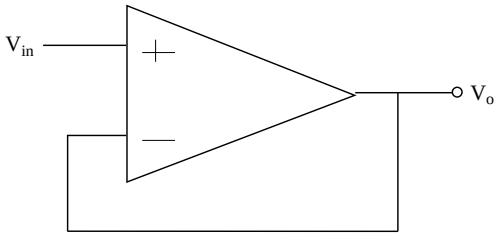

Why Care About a Follower?

Weak Signal Source with high Thevenin Resistance

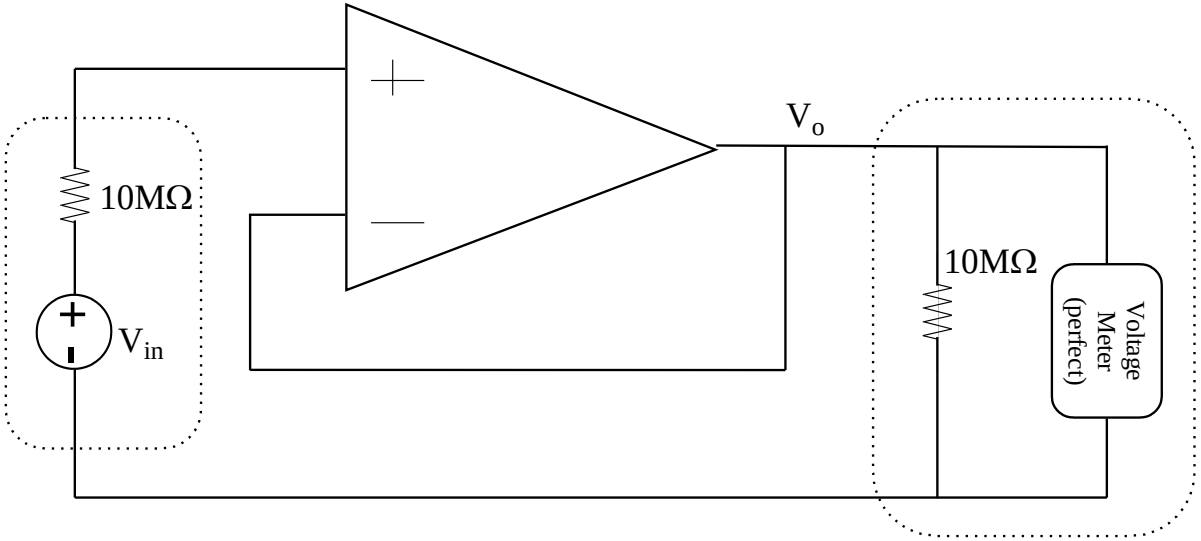

Use and Analysis of Ideal Op-Amps: Example Inverting Amplifier

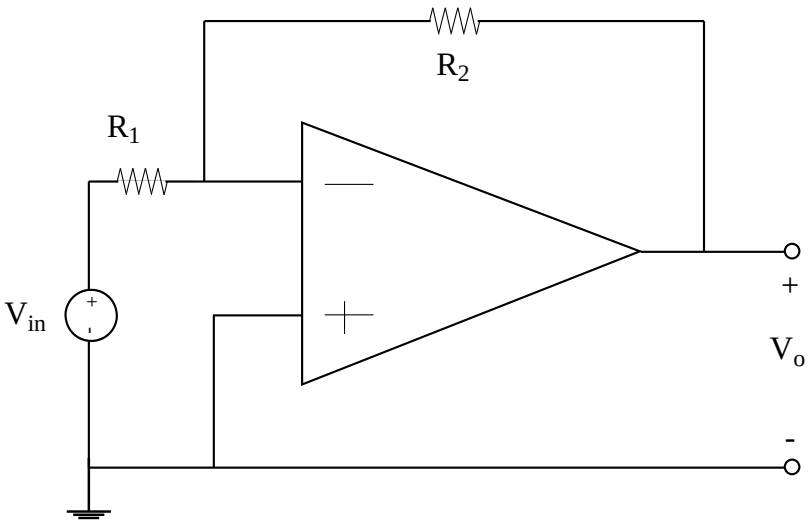

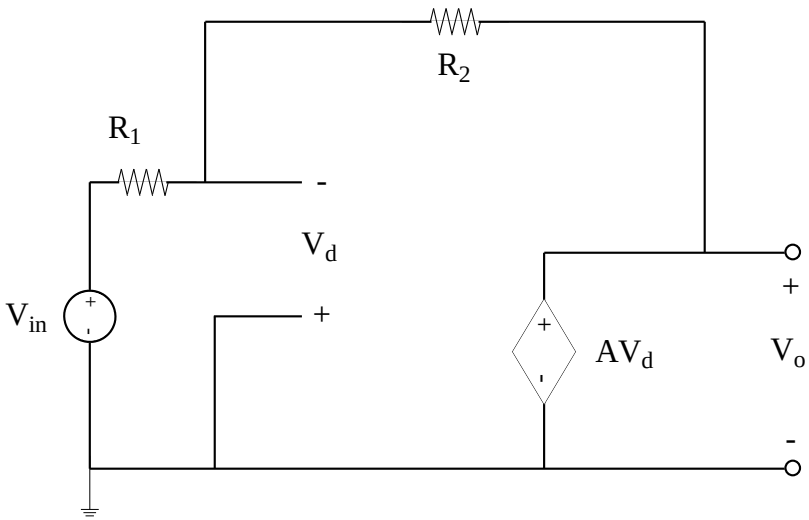

Nodal Analysis

$$v_1\left[\frac{1}{R_1}+\frac{1}{R_2}\right]+v_2\left[-\frac{1}{R_2}\right]=\frac{V_{in}}{R_1}$$

$$v_2=V_o=Av_d=A(0-v_1)=-Av_1$$

$$\rightarrow v_1\left[\frac{1}{R_1}+\frac{1}{R_2}+\frac{A}{R_2}\right]=\frac{V_{in}}{R_1}$$

$$\rightarrow v_1=V_{in}\left[\frac{R_2}{(A+1)R_1+R_2}\right]$$

$$\rightarrow V_o=-V_{in}\left[\frac{AR_2}{(A+1)R_1+R_2}\right]$$

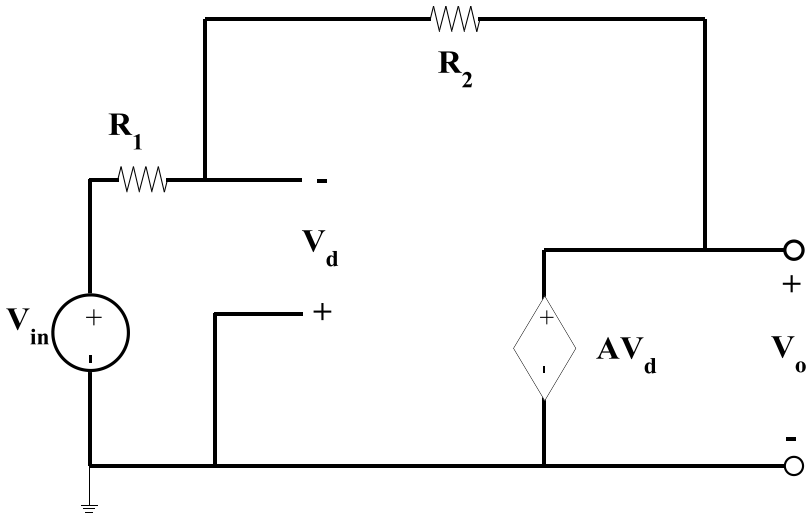

Limits as A→∞

$$v_1=V_{in}\left[\frac{R_2}{(A+1)R_1+R_2}\right]=-v_d\rightarrow 0$$

$$V_o=-V_{in}\left[\frac{AR_2}{(A+1)R_1+R_2}\right]\rightarrow V_{in}\left[-\frac{R_2}{R_1}\right]$$

Repeat Inverting Amp with Golden Rules

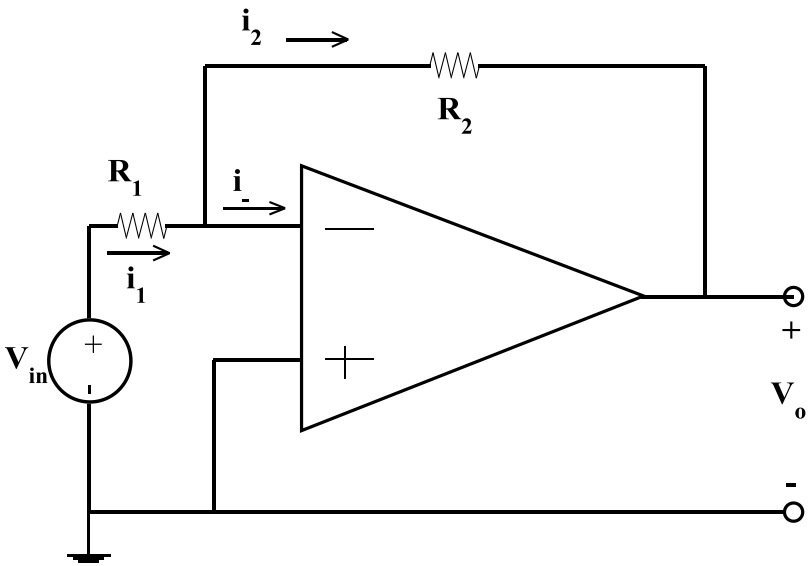

Repeat Inverting Amp with Golden Rules

$$V_- = V_+ = 0$$

$$i_- = 0 \rightarrow i_1 = i_2$$

$$i_1 = \left[V_{in} / R_1 \right]$$

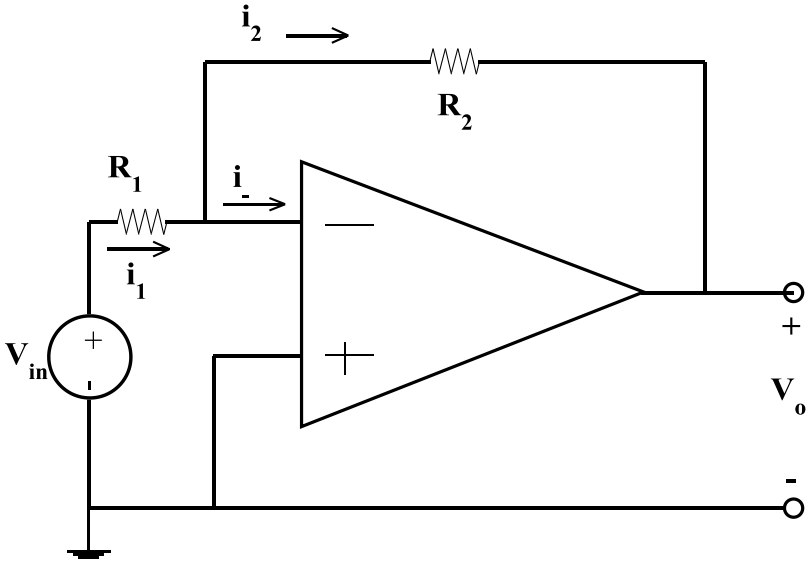

$$V_o = -R_2 i_2 = -R_2 i_1 = V_{in} \left[-\frac{R_2}{R_1} \right]$$

KCL Warning I

- NEVER DO KCL-BASED Analysis of Ideal Op-Amp Circuits At <u>Output or At Ground</u> Node
- Why?

KCL Warning II

- Power Supplies Must Be Included to Do KCL at Output
- Example

$$i_2 + i_{cc1} + i_{cc2} + i_o = 0$$

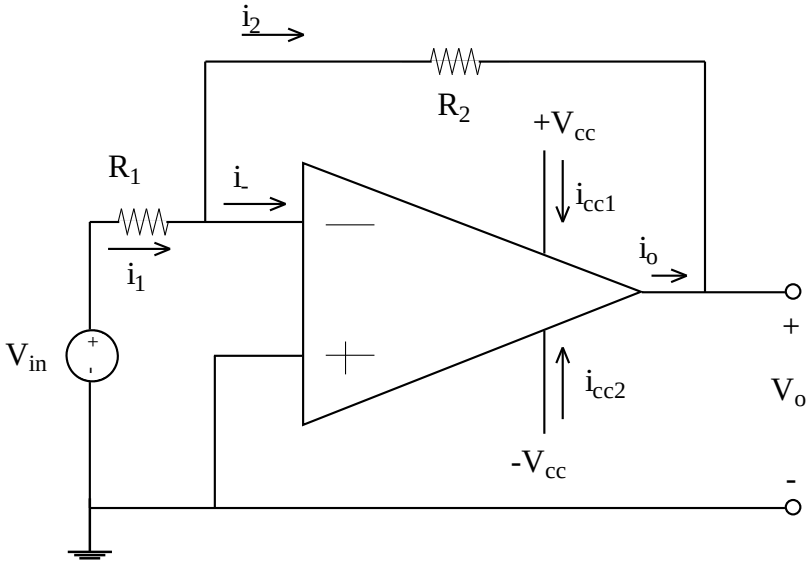

KCL at the output or ground node will never help us analyze an ideal op-amp circuit

Negative Feedback

- Feedback: return some of the output to the input
- Negative feedback <u>*decreases*</u> input signal (v_d)
- Achieves desired circuit gain, large range of input
- Increases Circuit Stability

Negative Feedback

$$v_0 \approx \frac{R_1 + R_2}{R_2} v_s$$

$$v_s \Rightarrow \pm V_{CC} \Big/ \left(\frac{R_1 + R_2}{R_2} \right)$$

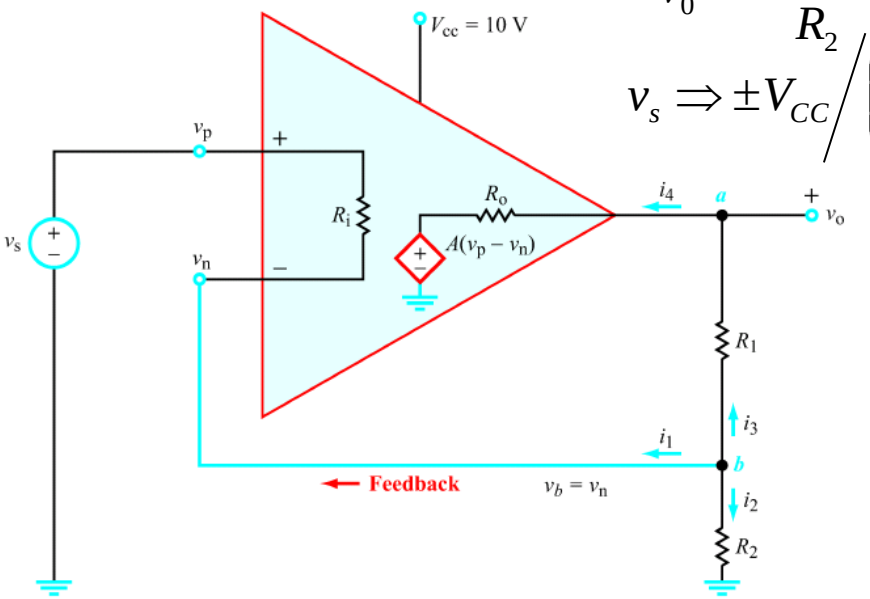

No Feedback

$$v_0 \approx A v_s$$

$$v_s \Rightarrow \pm \frac{V_{CC}}{A}$$

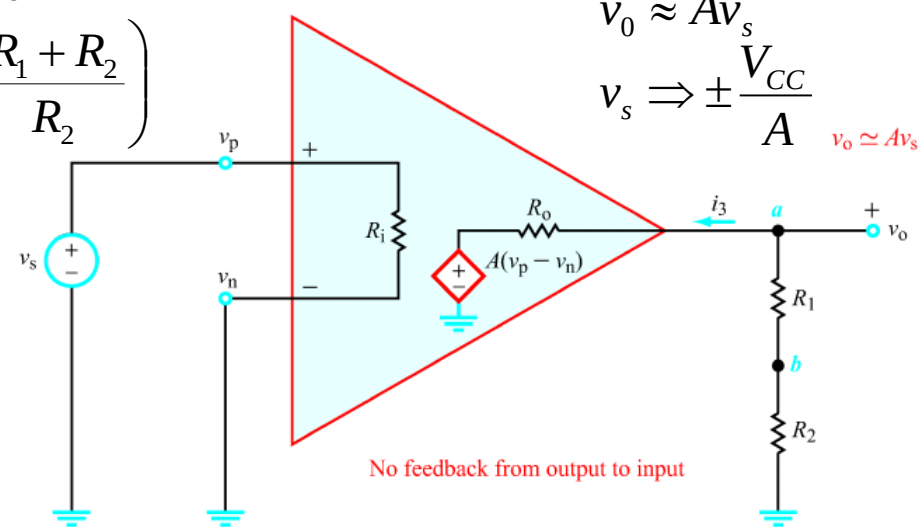

Negative Feedback Tests

- Setup Circuit with Large Finite A. All of the following are equally good tests for negative feedback
  - <u>Does Increasing Vo decrease Vd?</u>
  - Does Increasing Vd decrease Vo?
  - Does Increasing A decrease Vd?

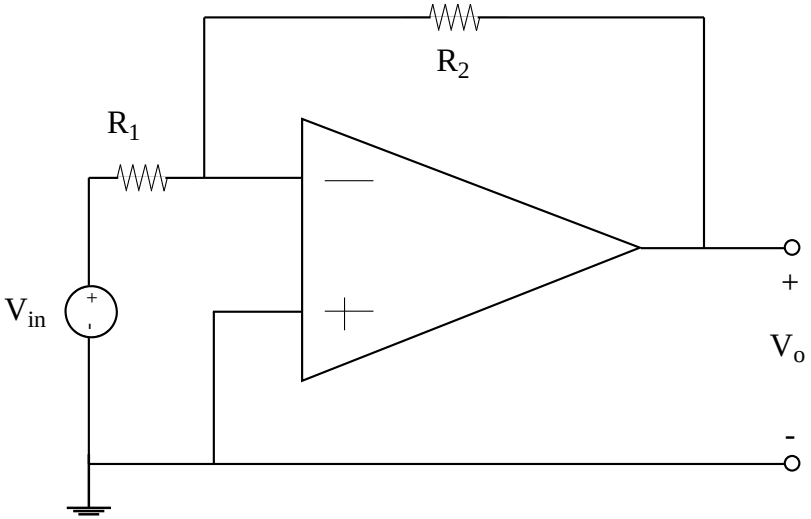

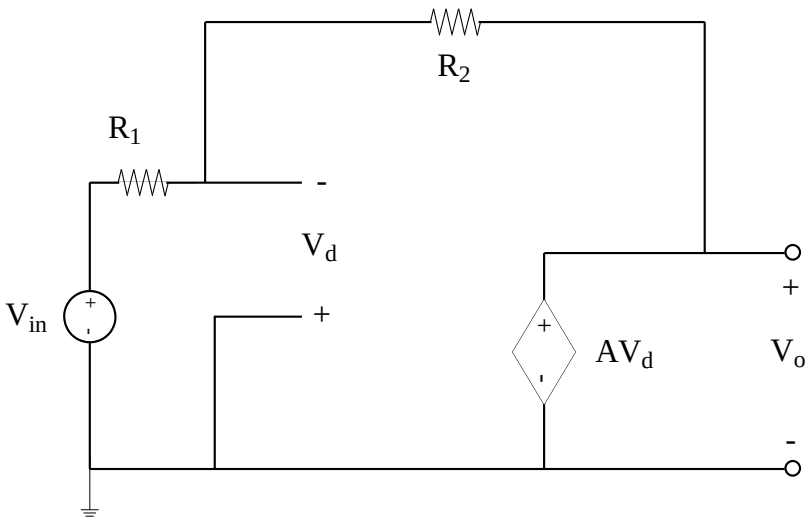

Negative Feedback Test

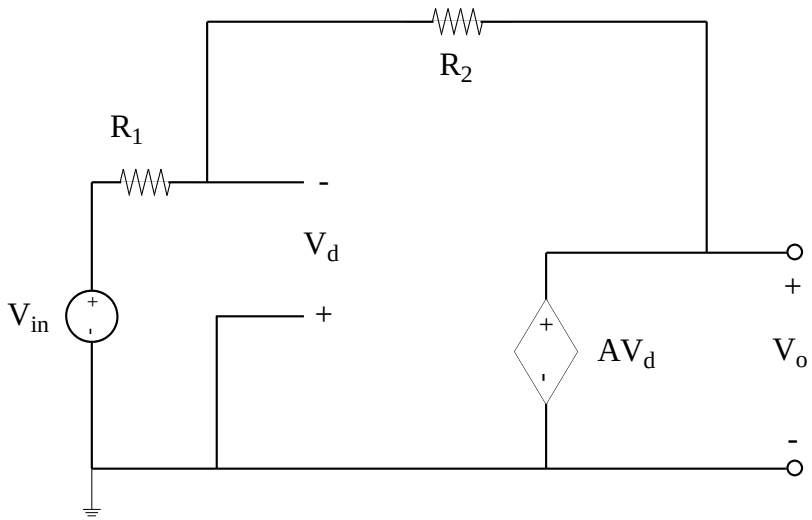

Ideal Op-Amp At Infinite Gain with No Feedback

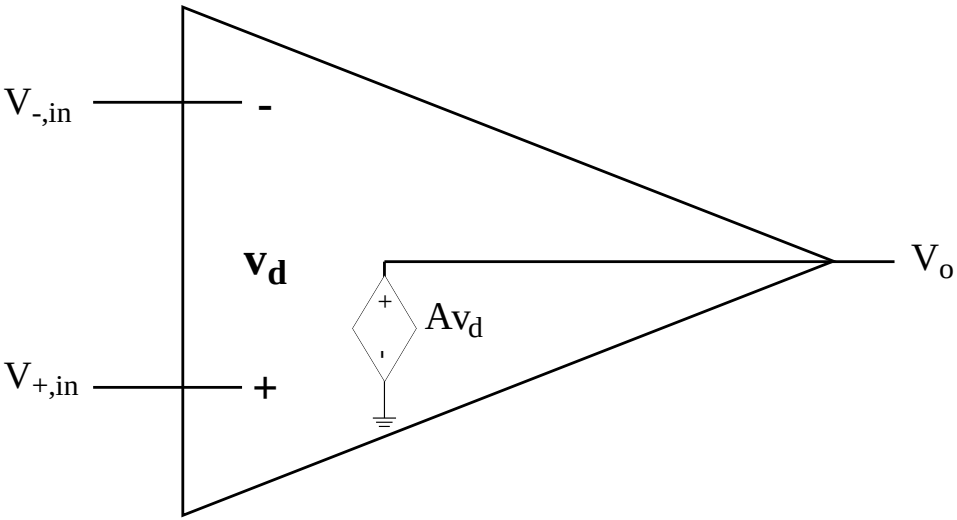

$$R_i \rightarrow \infty$$

$$V_{offset} = 0$$

$$A \rightarrow \infty$$

$$R_o = 0$$

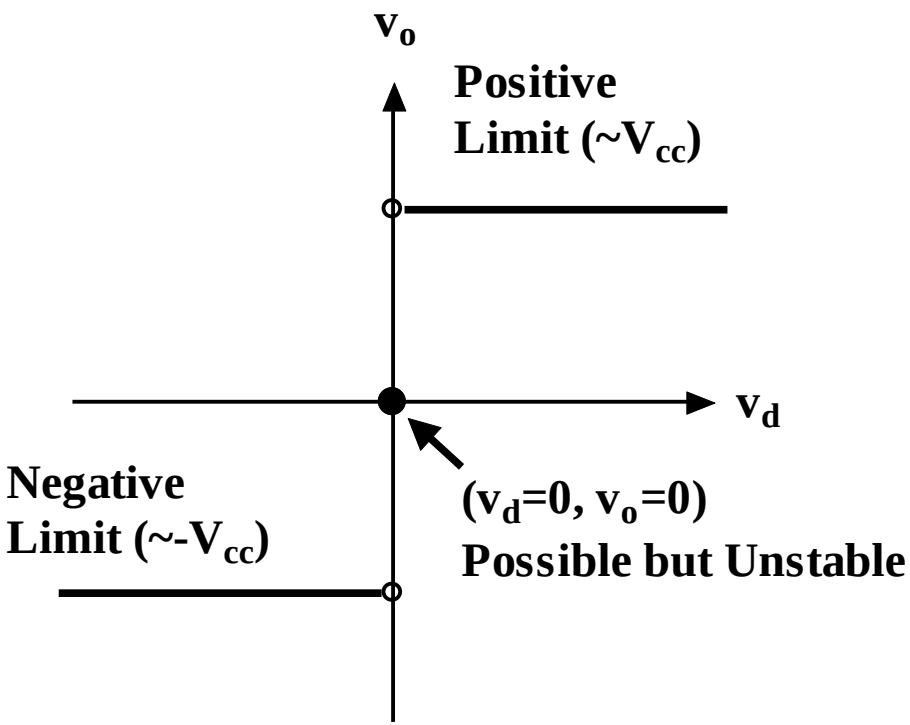

Ideal Op-Amp At Infinite Gain with Negative Feedback

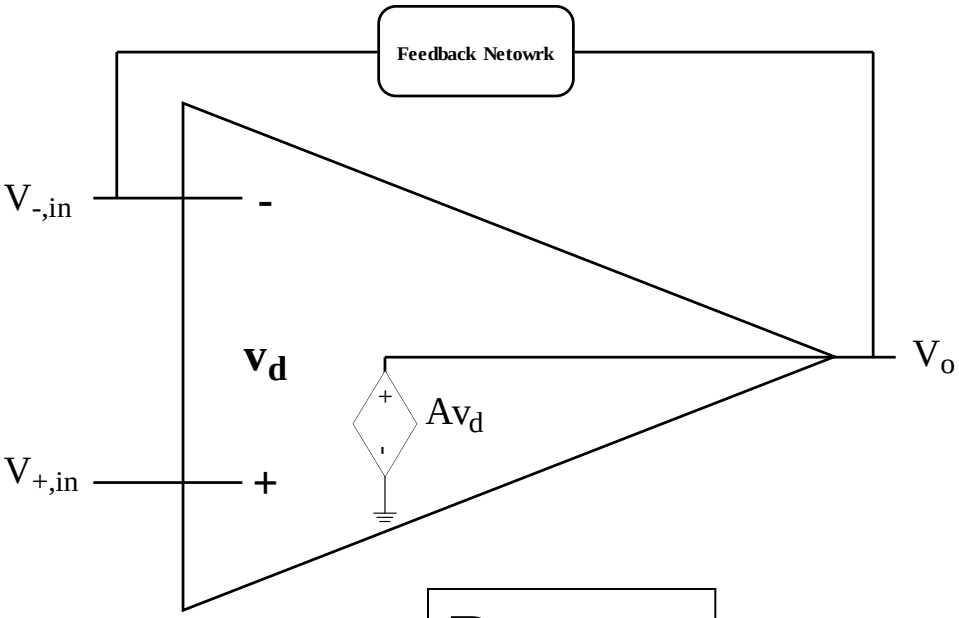

$$R_i \to \infty$$

$$V_{offset} = 0$$

$$A \to \infty$$

$$R_o = 0$$

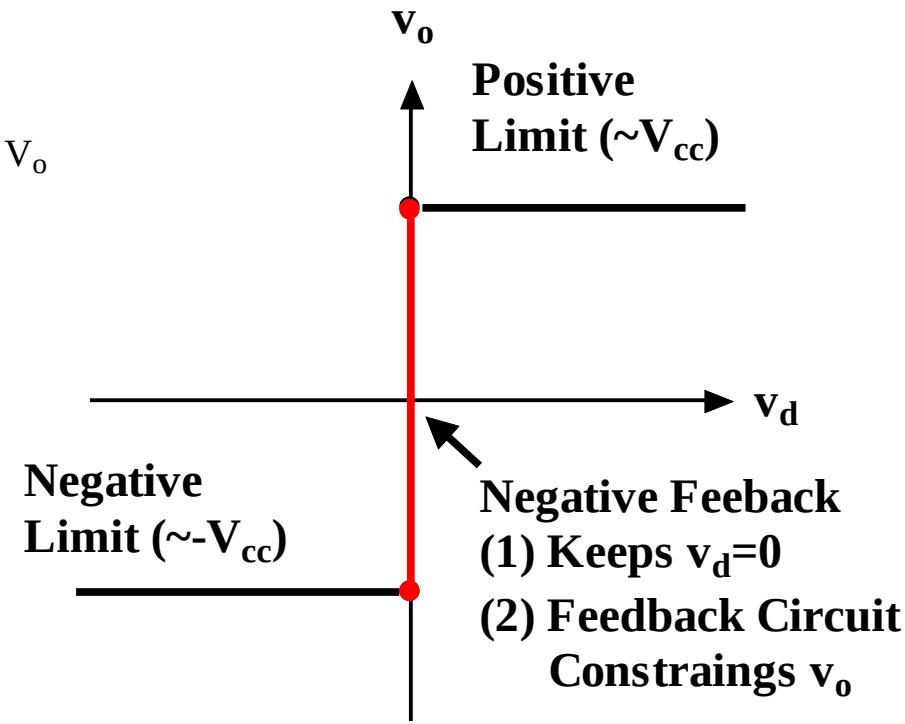

Finite Gain Example Values

$$v_d = -V_{in}\left[\frac{R_2}{(A+1)R_1 + R_2}\right] = -v_-$$

$$V_o = -V_{in}\left[\frac{AR_2}{(A+1)R_1 + R_2}\right]$$

R1	R2			
1.00E+05	4.00E+05			
Vin	A	Vd	Vout	|Gain Error| %
1	10	-2.67E-01	-2.666667	3.33333E+01
1	100	-3.81E-02	-3.809524	4.76190E+00
1	1000	-3.98E-03	-3.980100	4.97512E-01
1	1.00E+04	-4.00E-04	-3.998001	4.99750E-02
1	1.00E+05	-4.00E-05	-3.999800	4.99975E-03
1	1.00E+06	-4.00E-06	-3.999980	4.99998E-04

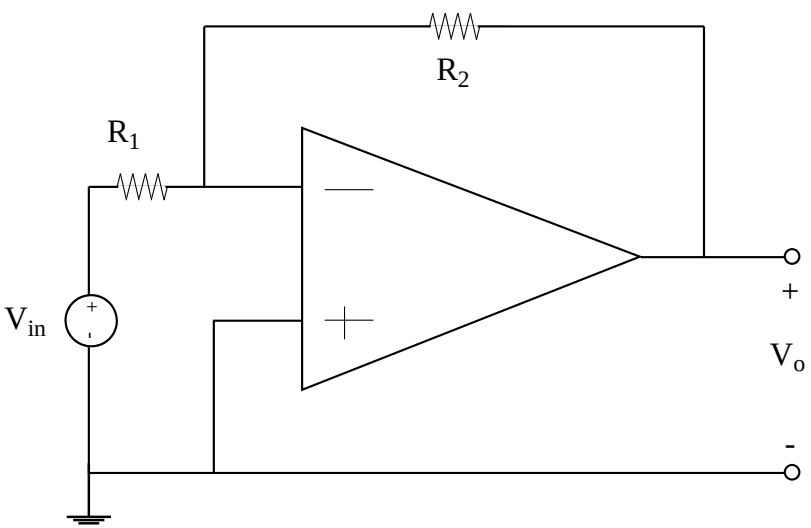

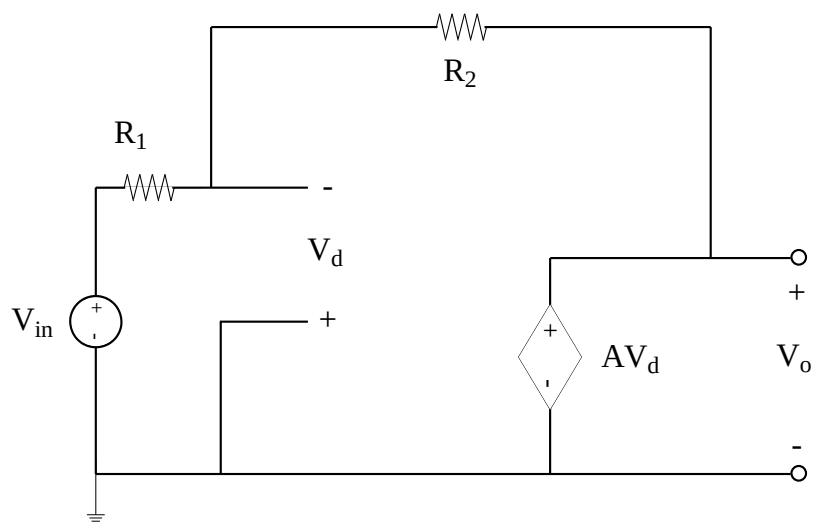

Finite Gain Inverting Op-Amp with R_1=100KΩ R_2=400KΩ

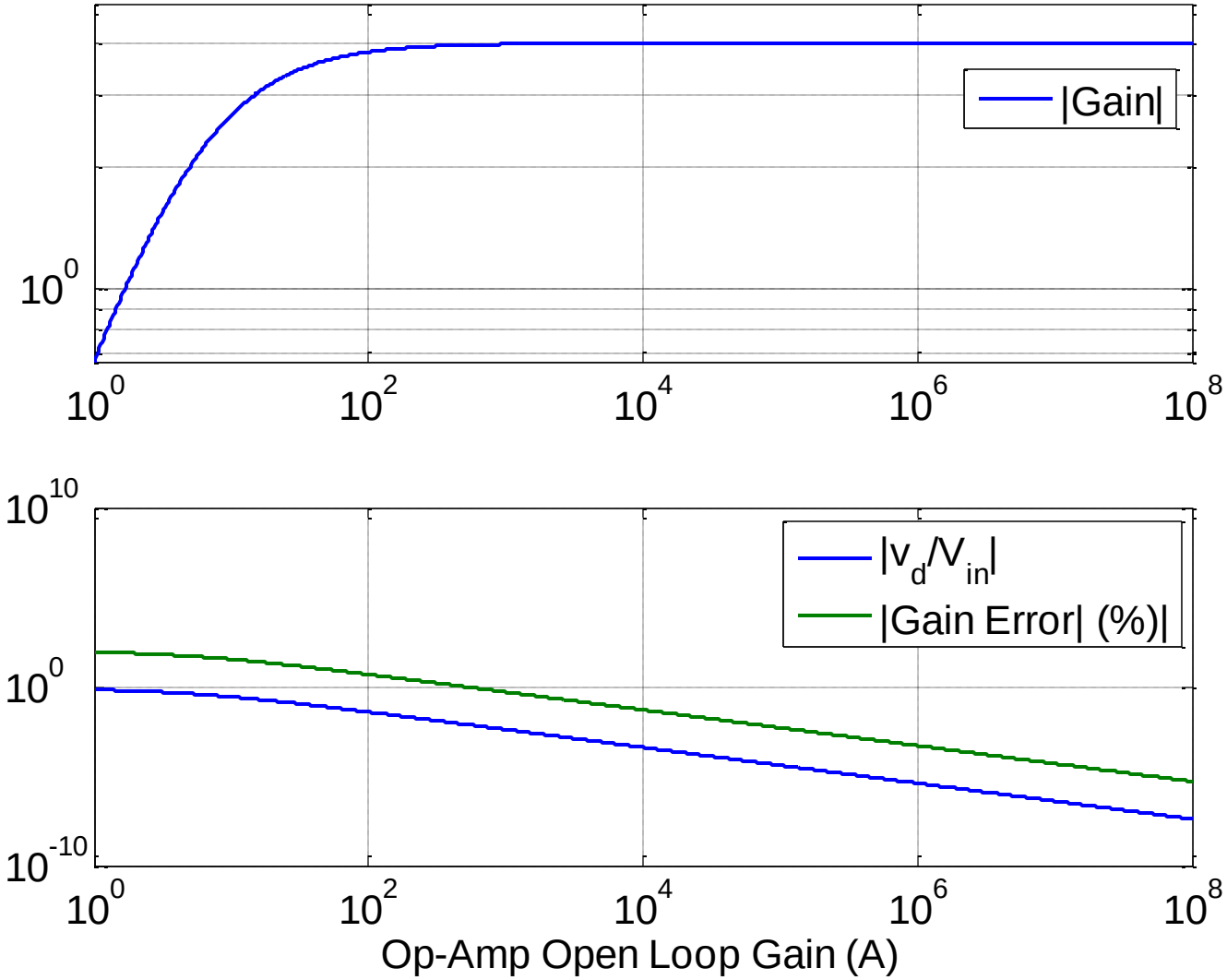

Comparison Question

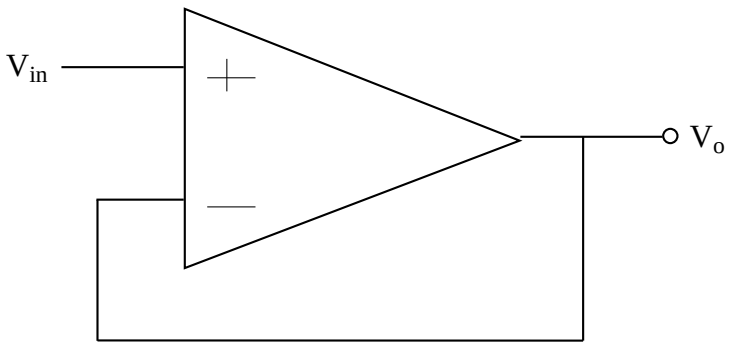

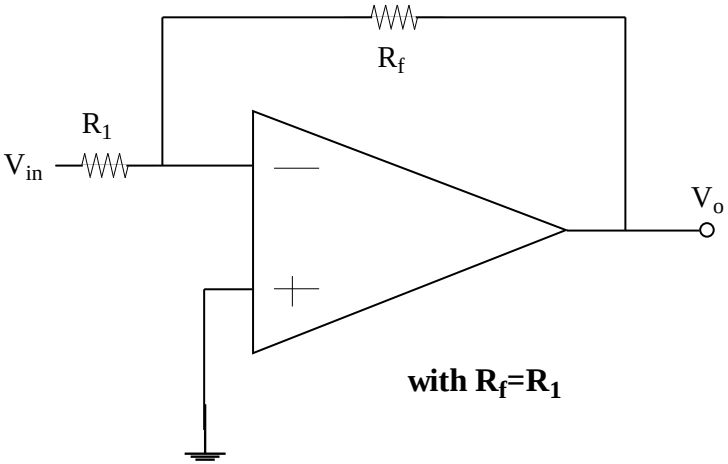

Not worrying about the Minus Sign,
Which Circuit is Better?

Extensions: Summing Amp

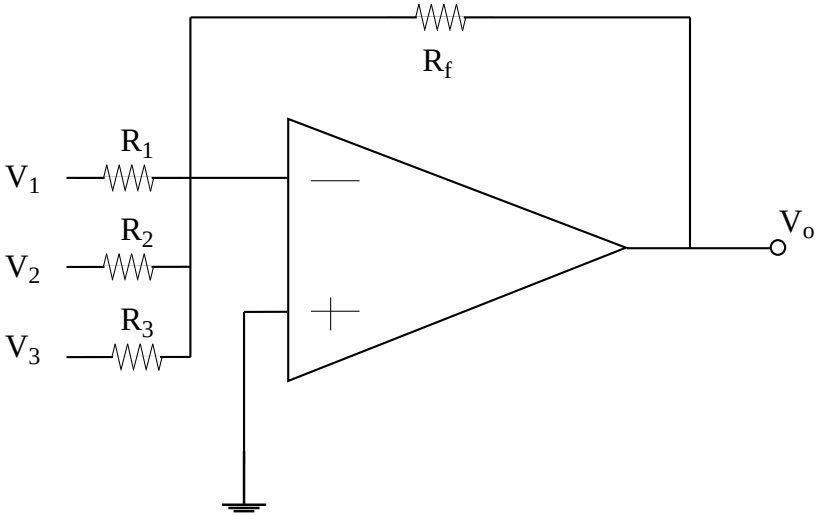

Extensions: Summing Amp

$$V_- = V_+ = 0$$

$$i_1 = \frac{V_1}{R_1}$$

$$i_2 = \frac{V_2}{R_2}$$

$$i_3 = \frac{V_3}{R_3}$$

$$i_f = i_1 + i_2 + i_3$$

$$V_o = -R_f i_f = -R_f \left[\frac{V_1}{R_1} + \frac{V_2}{R_2} + \frac{V_3}{R_3} \right]$$

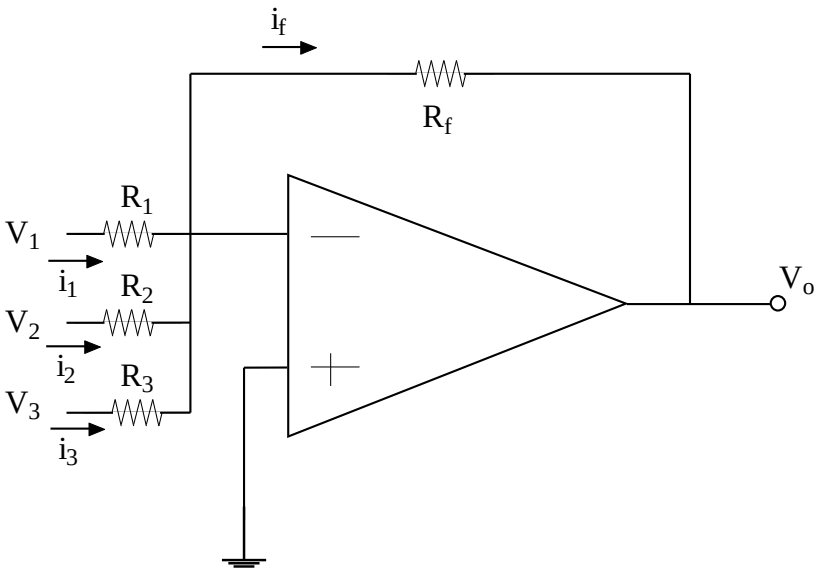

Extensions: Difference Amp

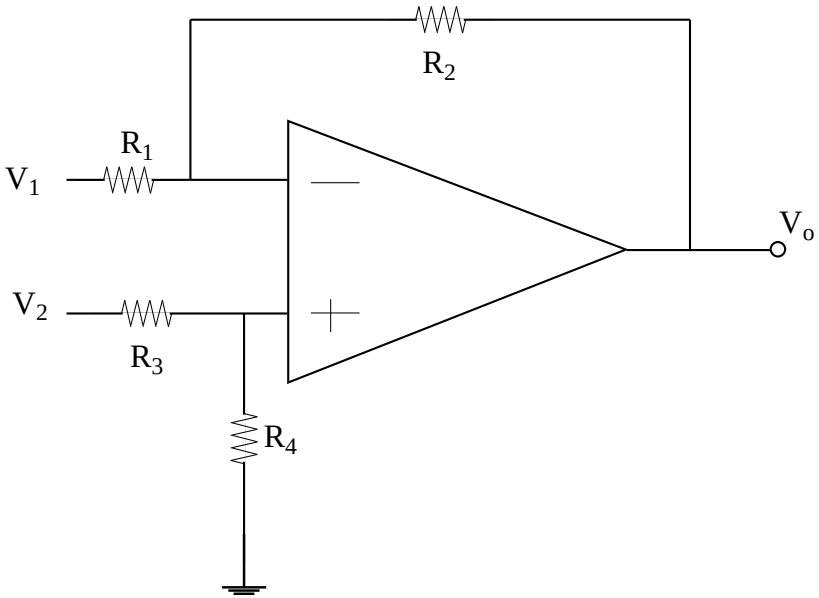

Extensions: Difference Amp

$$V_+ = \left[\frac{R_4}{R_3 + R_4}\right] V_2$$

$$V_- = V_+$$

$$i_f = \left[\frac{V_1 - V_-}{R_1}\right] = \left[\frac{V_1 - V_+}{R_1}\right]$$

$$V_o = \left(V_- - i_f R_2\right) = \left(V_+ - i_f R_2\right)$$

$$= V_+\left(1 + \frac{R_2}{R_1}\right) - V_1\left(\frac{R_2}{R_1}\right)$$

$$= V_2\left[\frac{R_4}{R_3 + R_4}\right]\left(1 + \frac{R_2}{R_1}\right) - V_1\left(\frac{R_2}{R_1}\right)$$

$$= \left(\frac{R_2}{R_1}\right)\left[\left(\frac{1 + R_1/R_2}{1 + R_3/R_4}\right) V_2 - V_1\right]$$

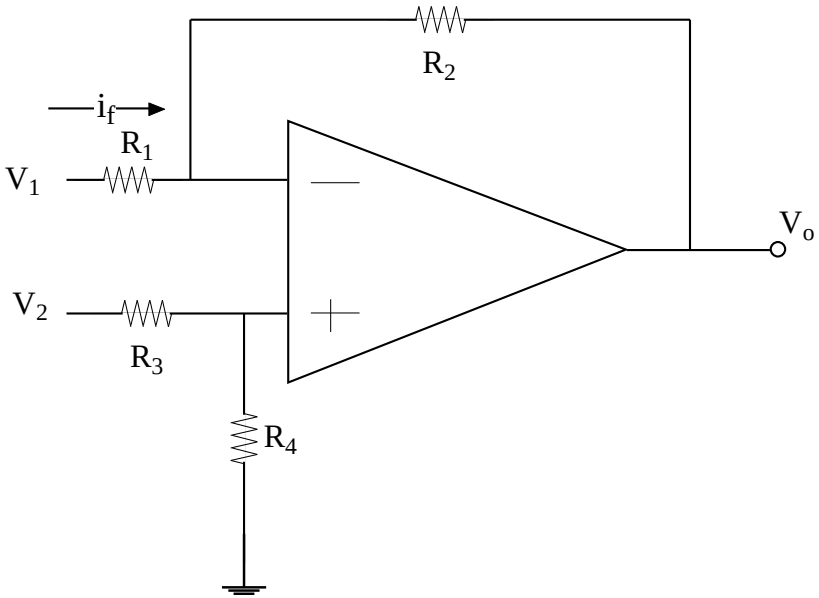

Multi-Stage Example: Instrumentation Amplifier

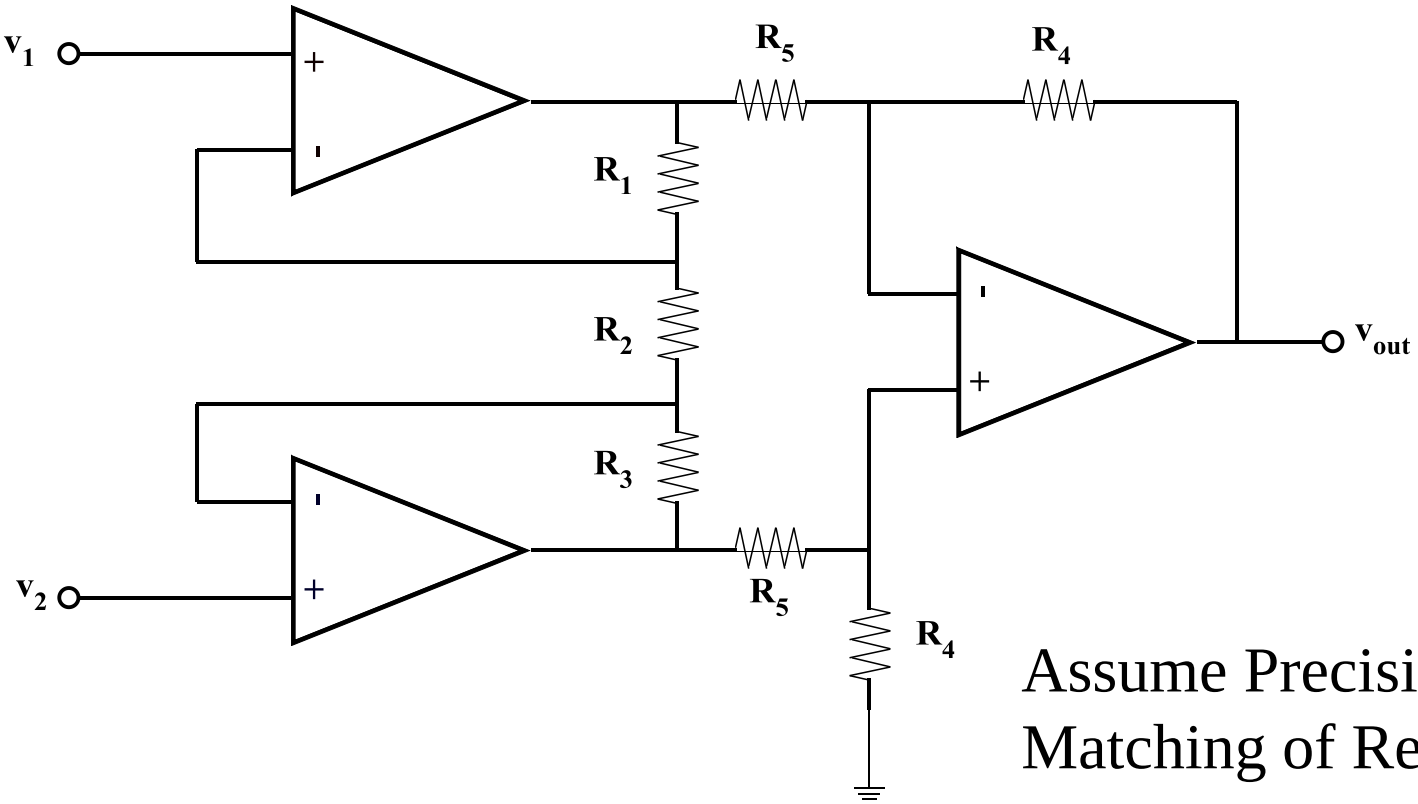

Assume Precision Matching of Resistors

Instrumentation Amplifier Analysis I

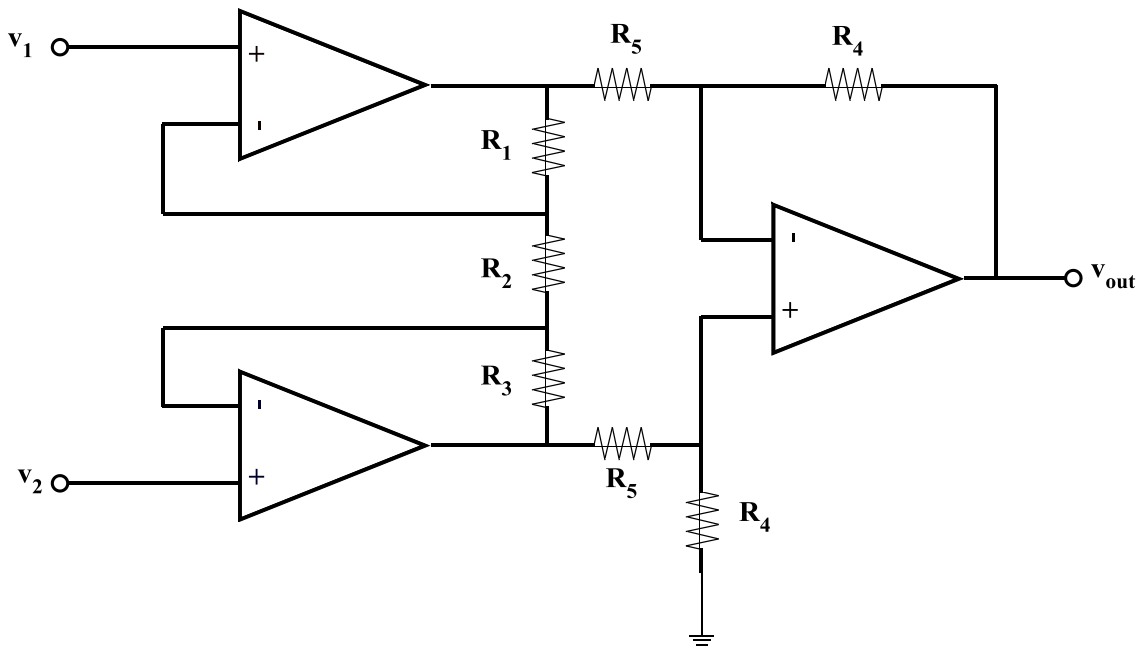

Instrumentation Amplifier Analysis II

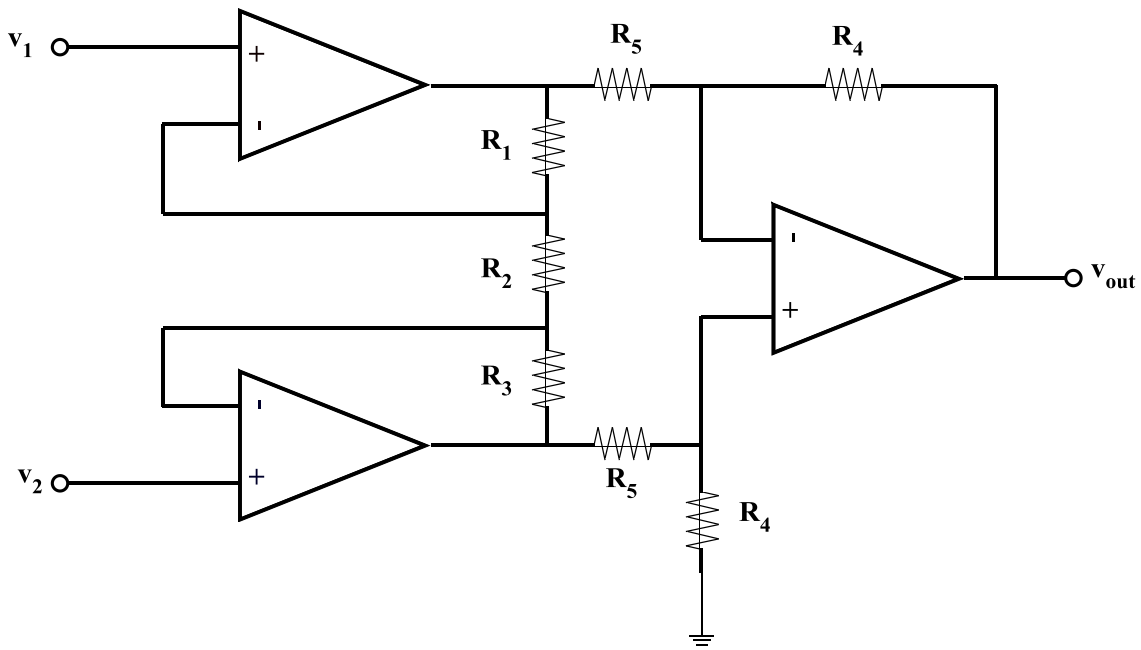

Why is better than a simple difference amp?

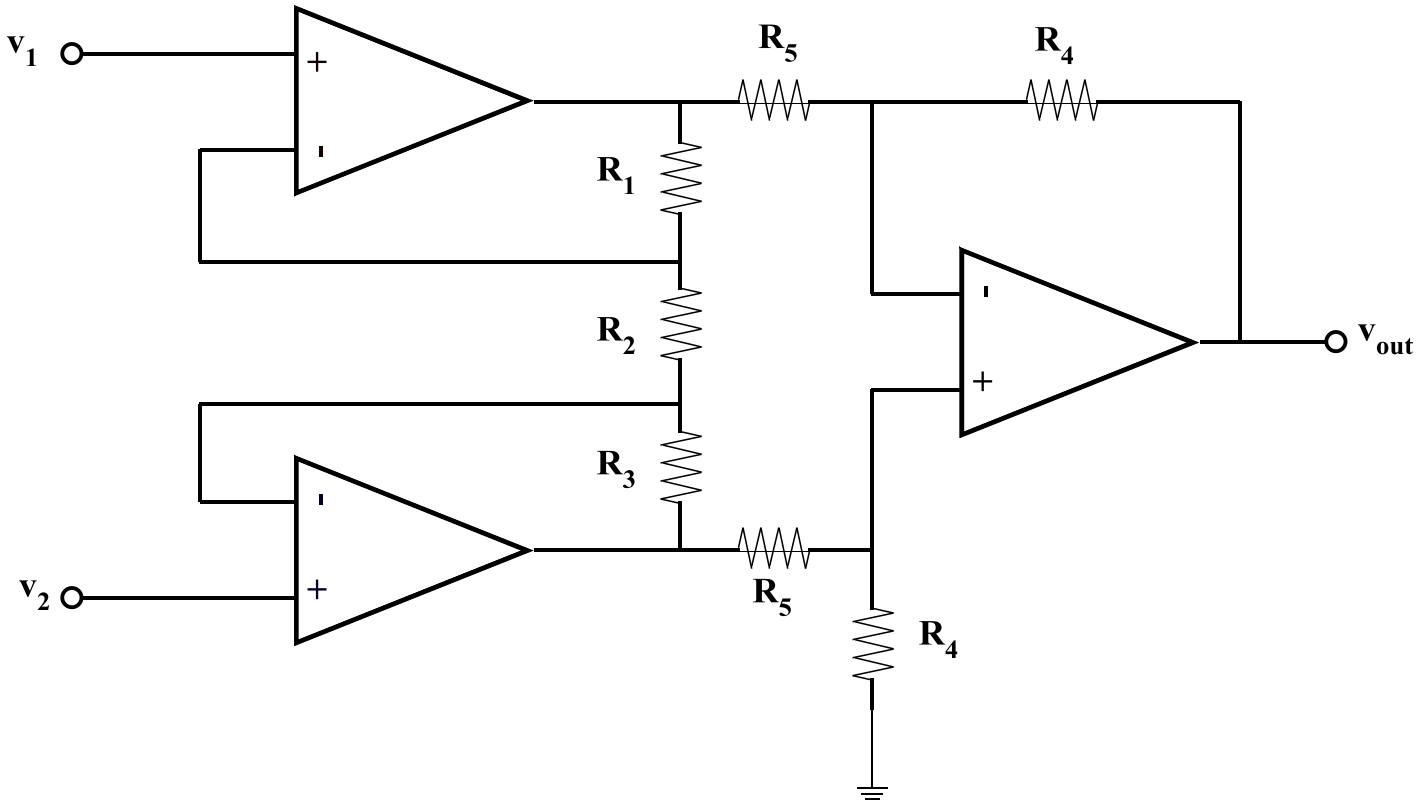

Instrumentation Amplifier

Highly sensitive differential amplifier

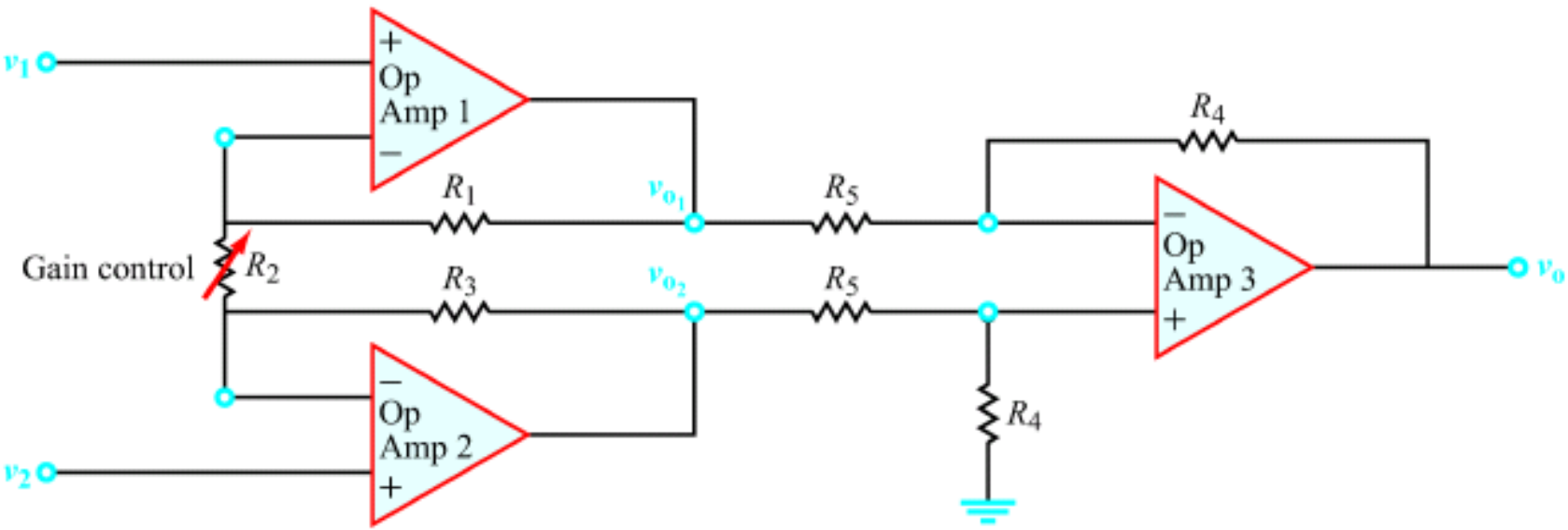

$$v_o = \left(\frac{R_4}{R_5}\right)\left(\frac{R_1 + R_2 + R_3}{R_2}\right)(v_2 - v_1)$$

How does this compare to a difference amplifier?

Digital to Analog Converter

Represent digital value with analog voltage

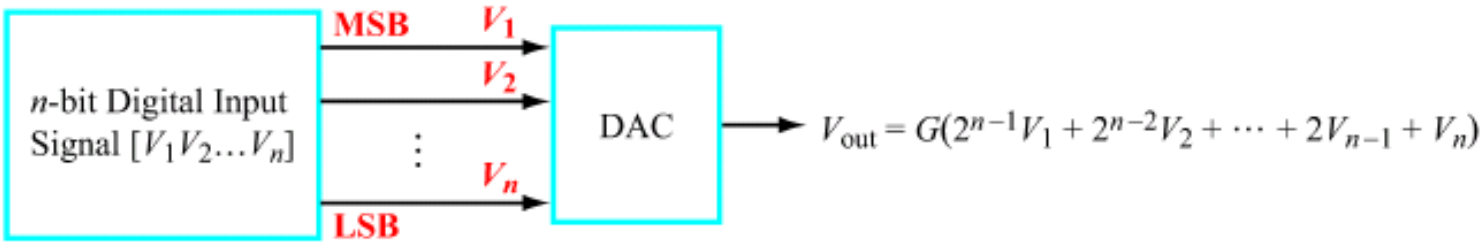

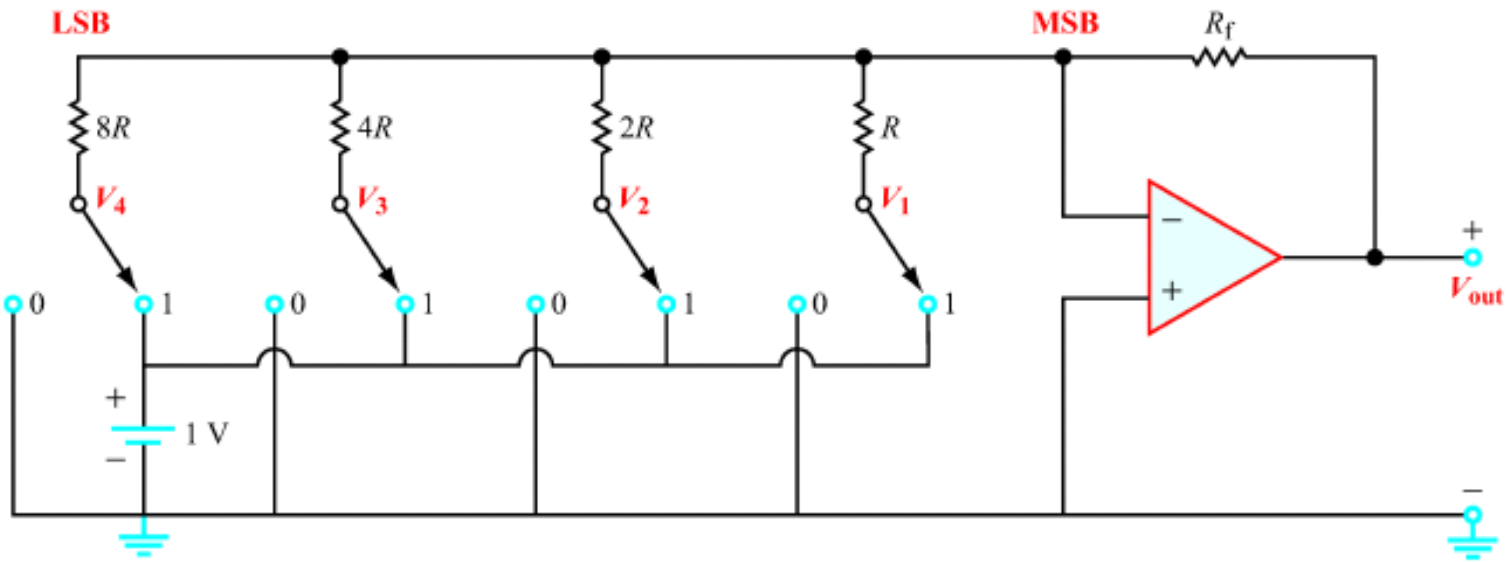

Op Amp Equivalent Circuit Example

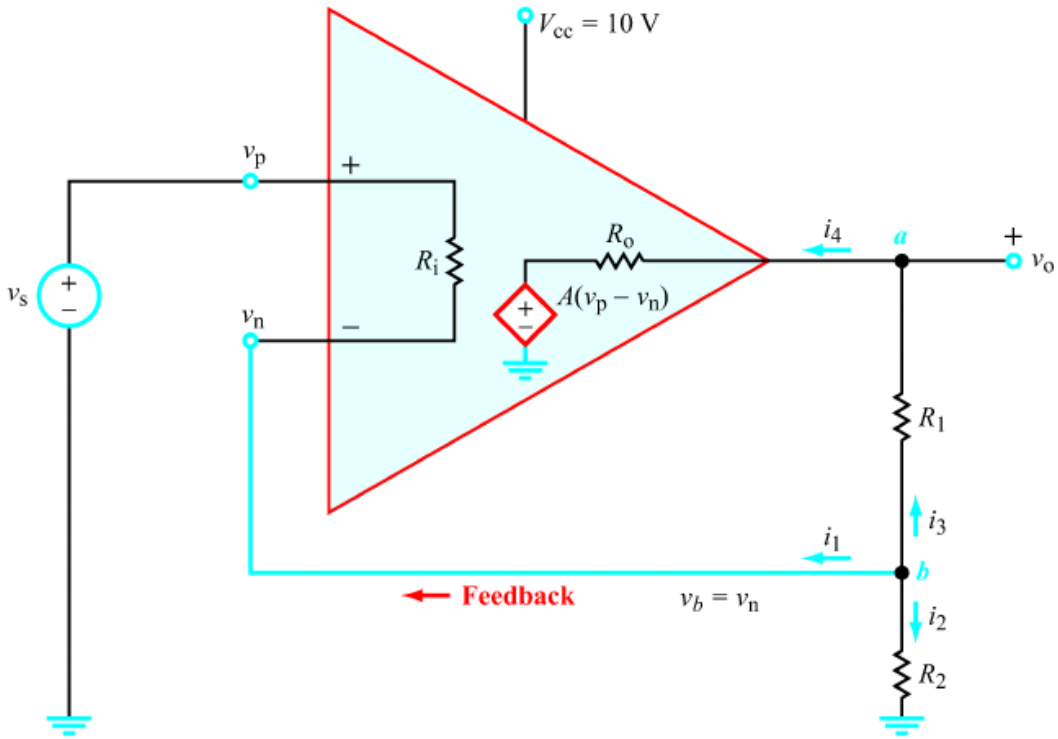

KCL at Node a:

$$\frac{v_n - v_0}{R_1} = \frac{v_0 - A(v_s - v_n)}{R_0}$$

KCL at Node b:

$$\frac{v_n - v_s}{R_i} + \frac{v_n - v_0}{R_1} + \frac{v_n}{R_2} = 0$$

$$G = \frac{v_0}{v_s} = \frac{AR_i(R_1 + R_2) + R_2 R_0}{AR_2 R_i + R_0(R_2 + R_i) + R_1 R_2 + R_i(R_1 + R_2)}$$

For infinite A:

$$G = \frac{v_0}{v_s} = \frac{R_1 + R_2}{R_2}$$

g-Parameters

- Inverse Hybrid (g) Parameters Are Often Used to Characterized Voltage Amplifiers

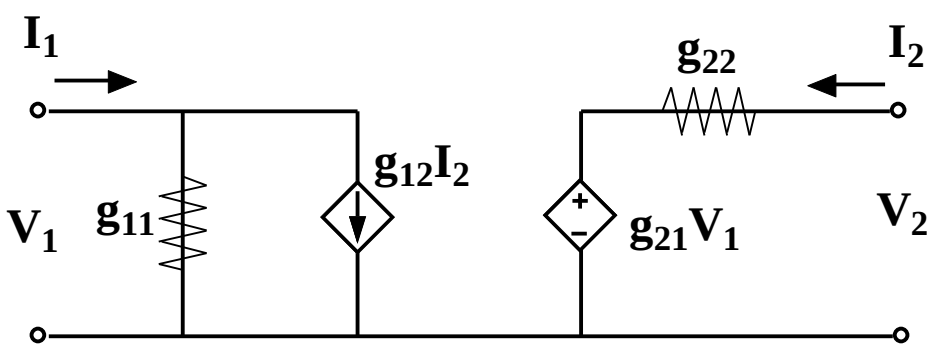

$$I_1 = g_{11}V_1 + g_{12}I_2$$

$$V_2 = g_{21}V_1 + g_{22}I_2$$

$$\begin{bmatrix} I_1 \\ V_2 \end{bmatrix} = \begin{bmatrix} g_{11} & g_{12} \\ g_{21} & g_{22} \end{bmatrix} \begin{bmatrix} V_1 \\ I_2 \end{bmatrix}$$

$1/g_{11}$ = Open Circuit Input Resistance
g_{12} = Short Circuit Reverse Current Gain
g_{21} = Open Circuit Forward Voltage Gain
g_{22} = Short Circuit Output Resistance

$$g_{11} = \left.\frac{I_1}{V_1}\right|_{I_2=0} \qquad g_{12} = \left.\frac{I_1}{I_2}\right|_{V_1=0}$$

$$g_{21} = \left.\frac{V_2}{V_1}\right|_{I_2=0} \qquad g_{22} = \left.\frac{V_2}{I_2}\right|_{V_1=0}$$

g-Parameters for Non-Inverting/Non-Ideal Op-Amp Circuit

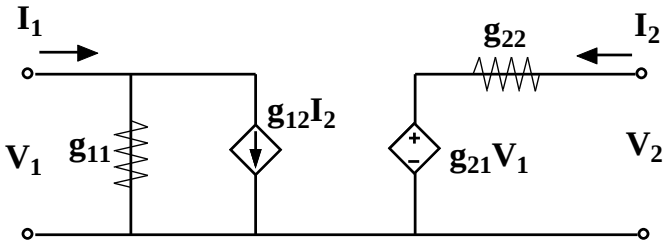

$$1/g_{11} = R_i + \frac{R_2\left(AR_i + R_1 + R_o\right)}{\left(R_1 + R_2 + R_o\right)}$$

$$= R_i\left(1 + A\frac{R_2}{\left(R_1 + R_2 + R_o\right)}\right) + \frac{R_2\left(R_1 + R_o\right)}{\left(R_1 + R_2 + R_o\right)}$$

$$g_{12} = -\frac{R_2 R_o}{R_i\left[\left(A+1\right)R_2 + R_1 + R_o\right] + R_2\left(R_1 + R_o\right)}$$

$$g_{21} = \frac{A\left(R_1 + R_2\right)R_i + R_2 R_o}{R_i\left[\left(A+1\right)R_2 + R_1 + R_o\right] + R_2\left(R_1 + R_o\right)} \rightarrow \frac{\left(R_1 + R_2\right)}{R_2} = \left(1 + \frac{R_1}{R_2}\right)$$

$$g_{22} = \frac{\left[R_i\left(R_1 + R_2\right) + R_1 R_2\right]R_o}{R_i\left[\left(A+1\right)R_2 + R_1 + R_o\right] + R_2\left(R_1 + R_o\right)} \rightarrow \frac{\left(R_1 + R_2\right)R_o}{\left[\left(A+1\right)R_2 + R_1 + R_o\right]}$$

$$\rightarrow \frac{1}{\left(A+1\right)}\left(1 + \frac{R_1}{R_2}\right)R_o$$

g-Parameters for Non-Inverting/Non-Ideal Op-Amp Circuit

Noninverting Amp with R_1=400KΩ and R_2=100KΩ

Typical 741 Specs $R_i \sim 2M\Omega \quad A \sim 2x10^5 \quad R_o \sim 75\Omega$

$$(1/g_{11}) = 7.99901x10^{10}\,\Omega \approx 80G\Omega$$

$$g_{12} = -1.87495x10^{-10}\,A/A \approx 187\,pA/A$$

$$g_{21} = 4.99987$$

$$g_{22} = 0.00194995\Omega \approx 1.95m\Omega$$

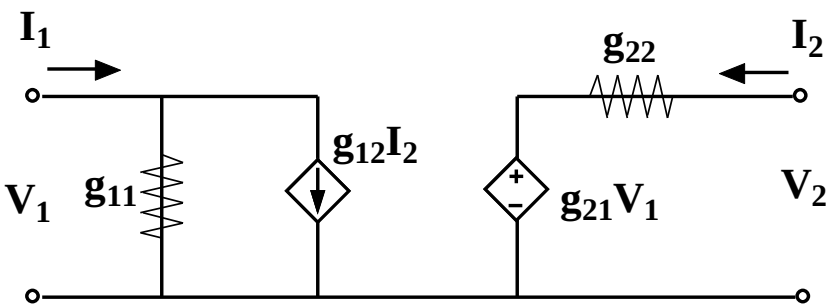

Positive Feedback

- Positive feedback *increases* input signal (v_d)
- Output driven to power supply rails
- "Latches" between high and low states
- Example: Schmitt Trigger

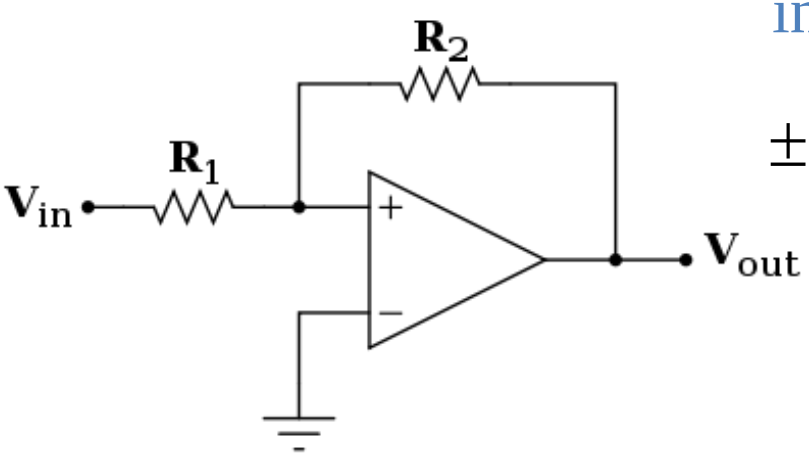

Switches when input hits

$$\pm V_{CC}\frac{R_1}{R_2}$$

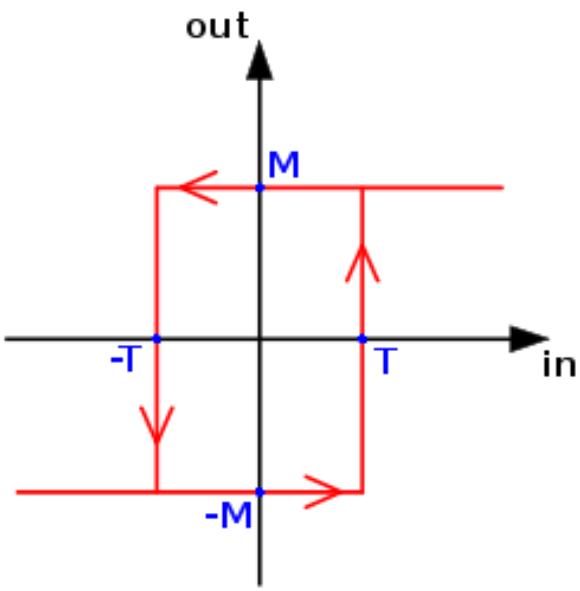

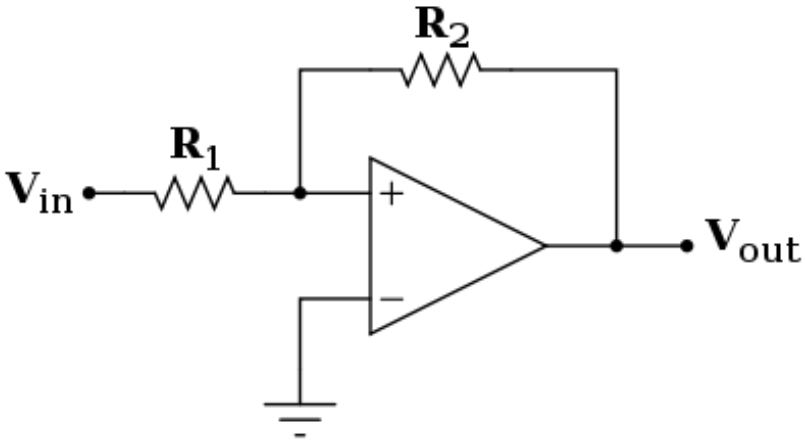

Switches when input hits
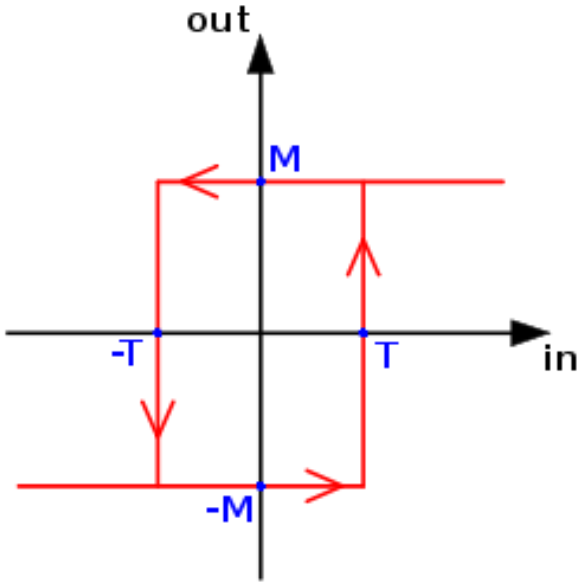
$$\pm V_{CC}\frac{R_1}{R_2}$$