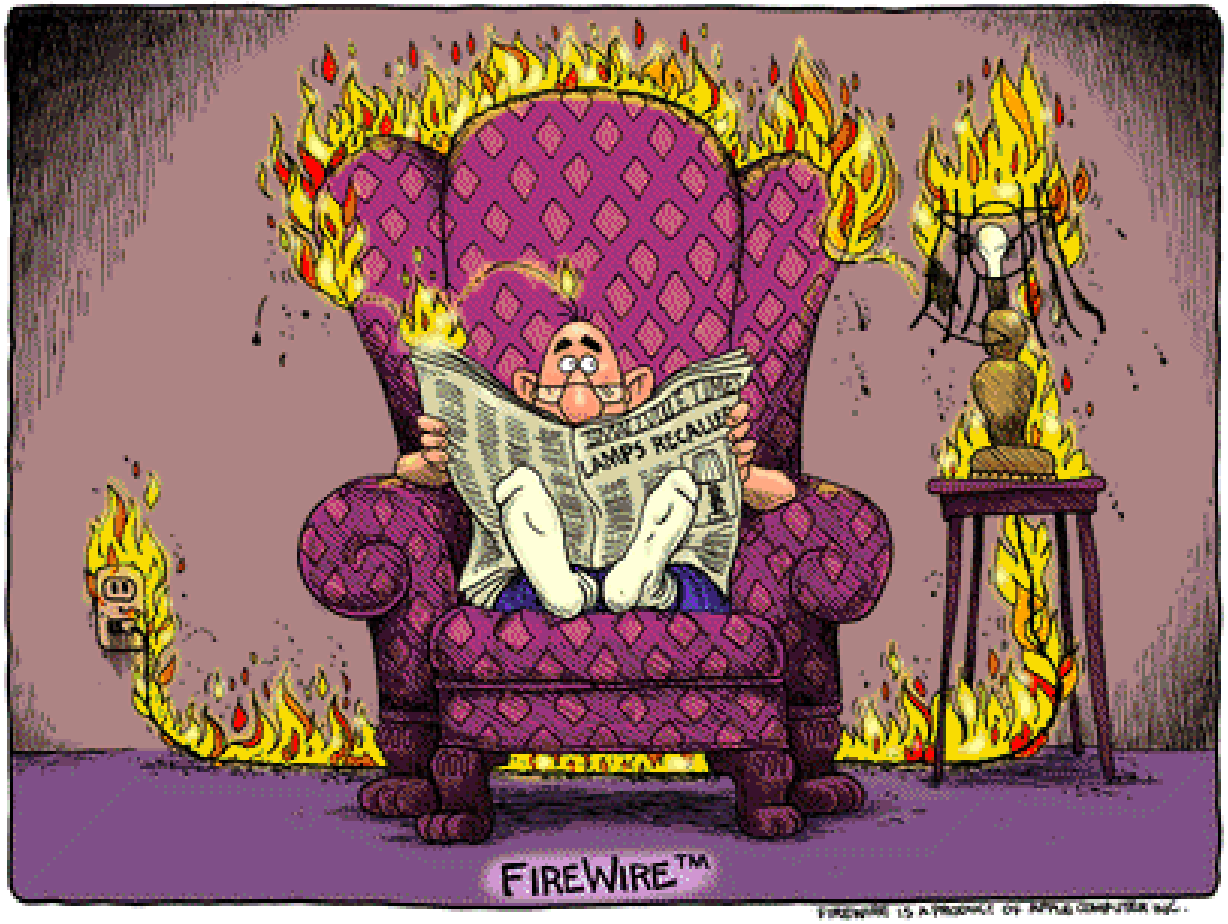

NODAL ANALYSIS III: EXAMPLES

© Fred Terry
Fall, 2013

Linear Equation Circuit Solution

- We can always solve a linear circuit by

1. Writing Down All KVL Equations Resulting From Voltage Sources
2. Writing Down KCL Equations At Each Simple Non-reference Node Including All Unknown Currents
3. Writing Down All Element Equations Including Dependent Source Control Variable Equations

- The Result Will Be Solvable But Potentially Large
- The Supernode Concept Reduces The Scale of the Problem

Logical Procedure

- Identify Nodes
- Choose a Ground Node (if necessary)
  - Negative terminal of constant Voltage Source if Possible
- Write Down KVL Equations Associated With Voltage Sources
  - This clears up trivial variables and identifies Supernodes
- Write Down Node/Supernode KCL Equations
- Write Down Dependent Source Variable Equations
- Count Unknowns and Equations As Check
- Solve Resulting Linear Equations
  - Eliminate variable besides node voltages by substitution for classic nodal analysis or directly solve larger problem

Nodal Analysis Example: Big Messy Nodal Example

- Object: Find V_{ab}
- Step 1: Choose Grnd Node

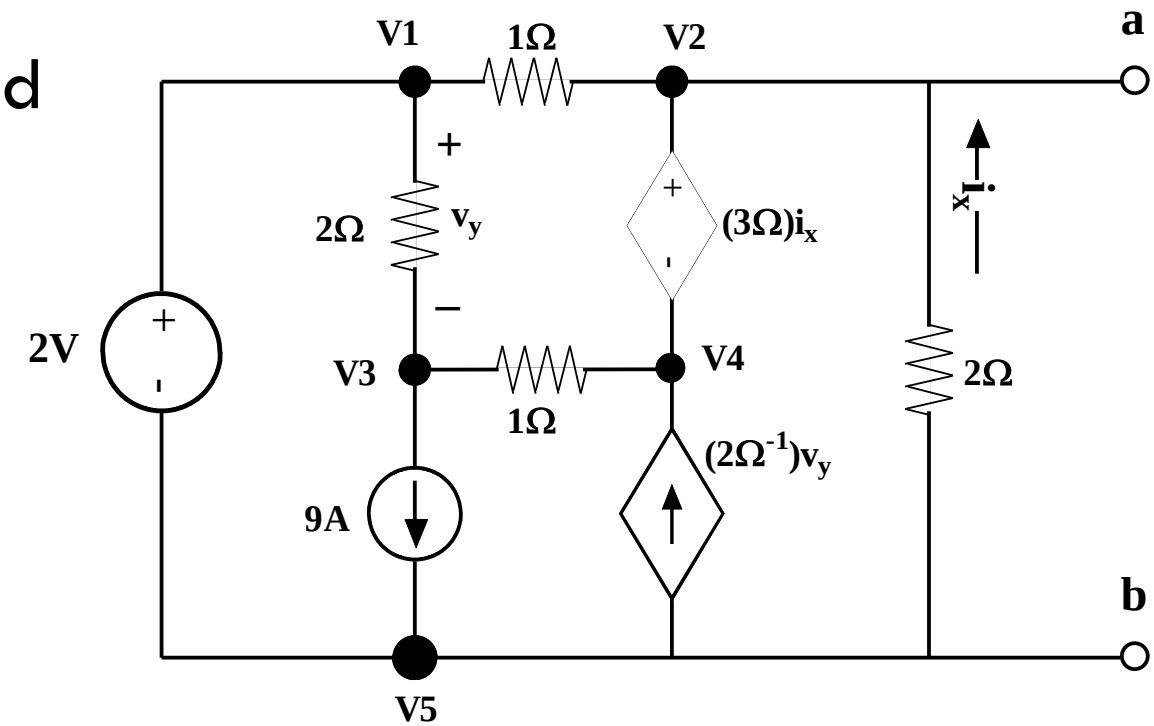

Nodal Analysis Example: Workpages

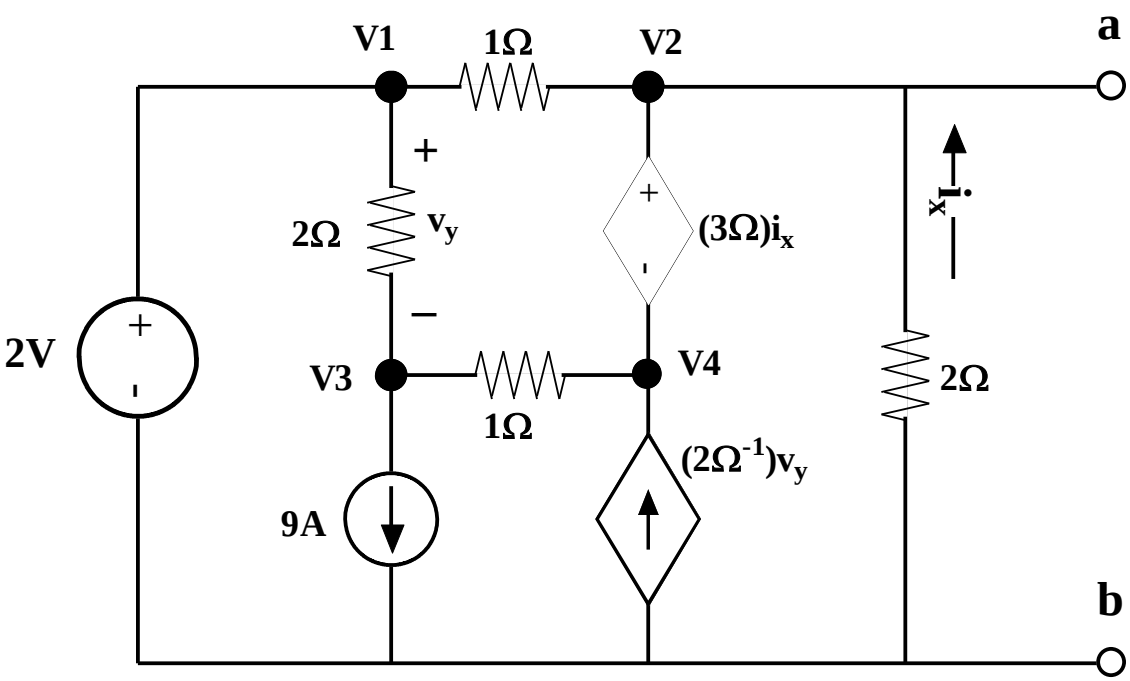

Nodal Analysis Example: Workpages

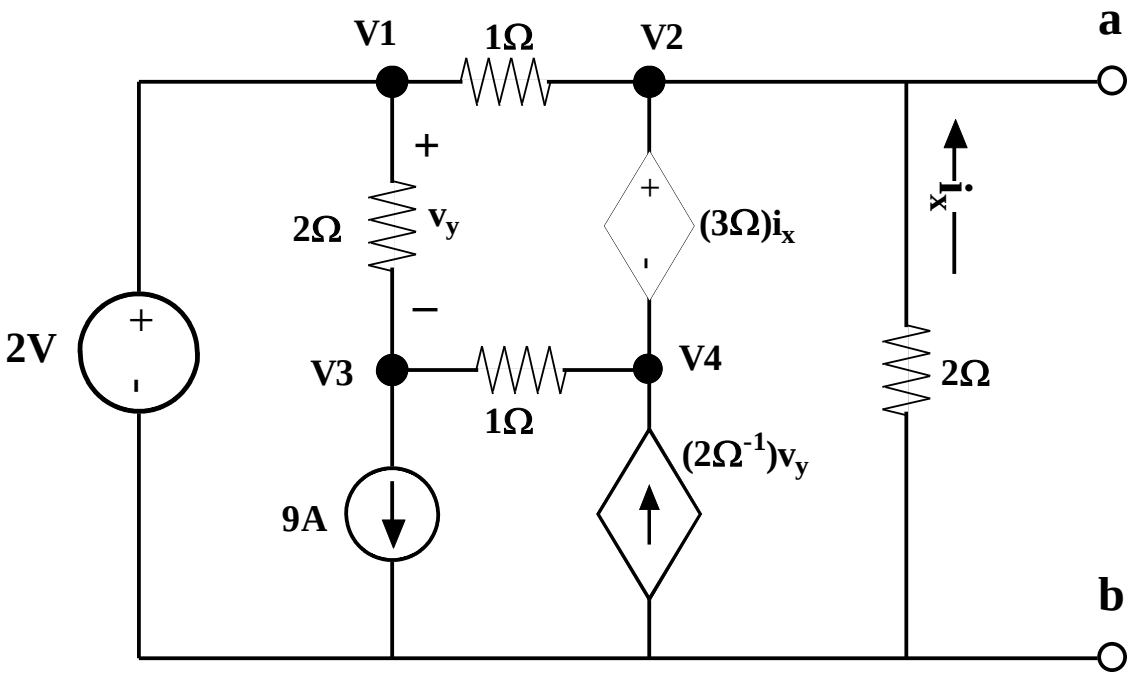

Nodal Analysis Example: Workpages

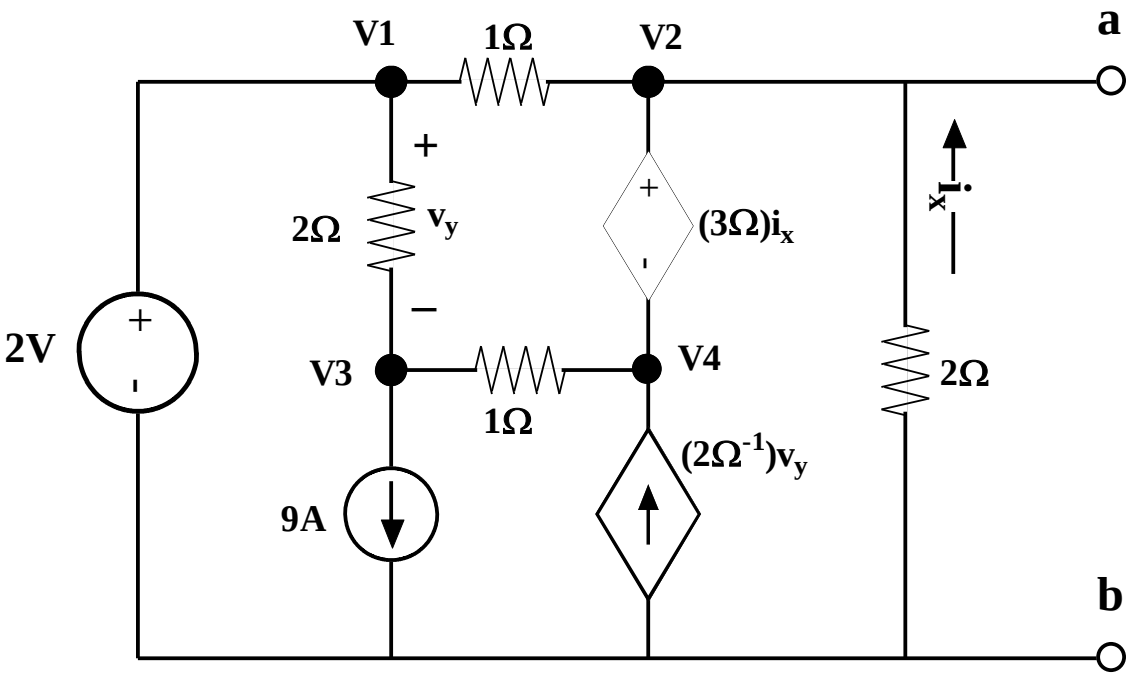

Nodal Analysis Example

- Grnd – Terminal of 2V Source
- Label Nodes
- Note that V_1=2V
- Note that V_{ab}=V_2
- Note that Nodes 2-4 form a Supernode due to v-source

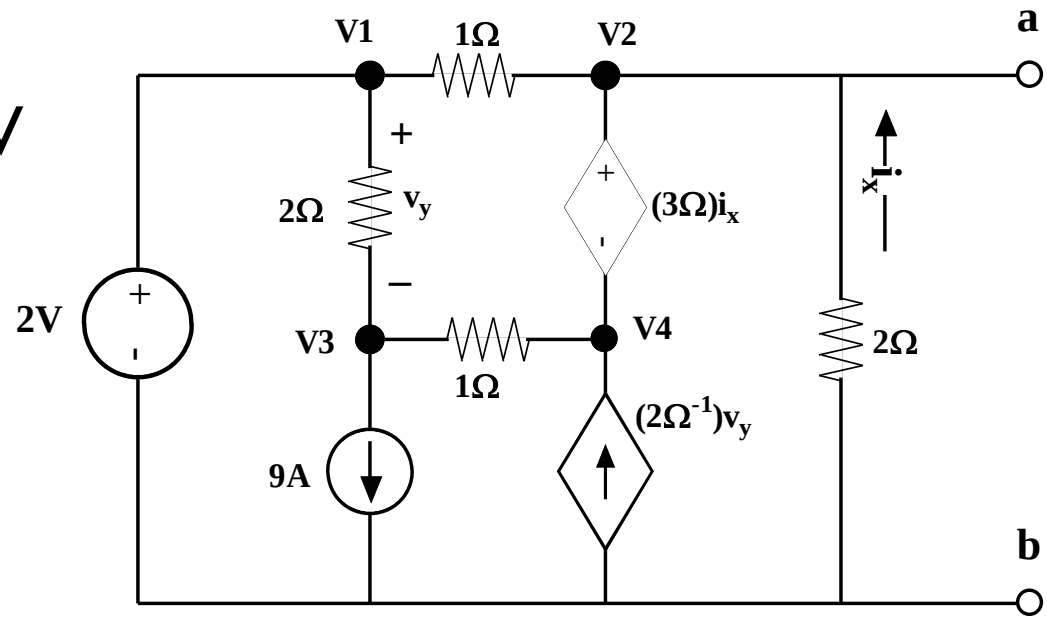

Nodal Analysis 2

- Write KCL Equations
  - KCL at SN:

$$\frac{2V - v_2}{1\Omega} + \frac{v_3 - v_4}{1\Omega} + i_x + 2\Omega^{-1} v_y = 0$$

  - KCL at Node 3:

$$\frac{2V - v_3}{2\Omega} + \frac{v_4 - v_3}{1\Omega} = 9A$$

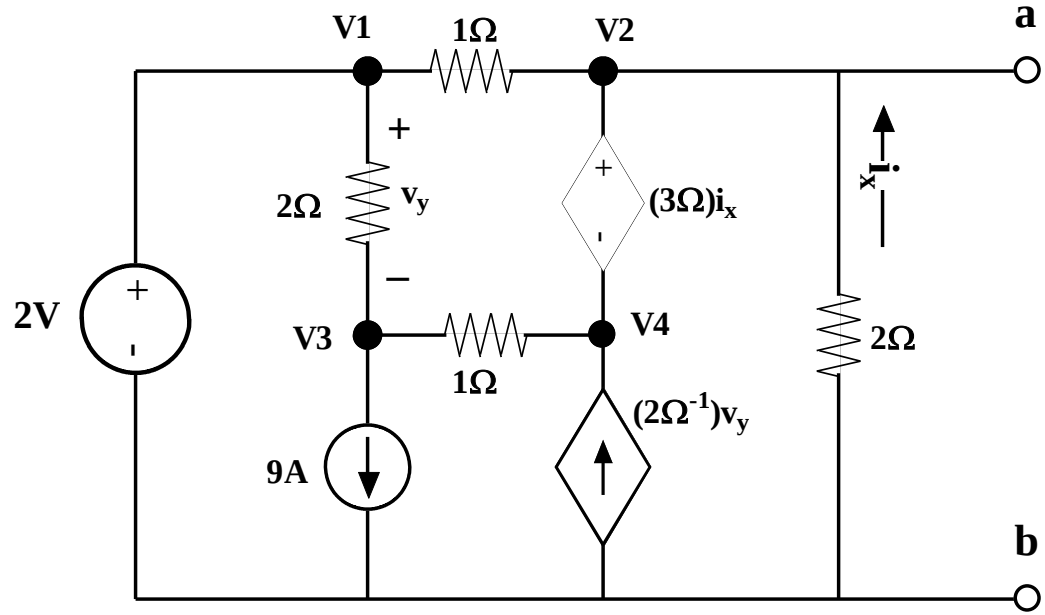

- Conditions on Dependent Sources

$$i_x = -\frac{v_2}{2\Omega}$$

$$v_y = \left(v_1 - v_3\right) = \left(2V - v_3\right)$$

$$v_4 = \left(v_2 - (3\Omega) i_x\right) = \left(v_2 + (3\Omega)\frac{v_2}{2\Omega}\right) = 2.5 v_2$$

Nodal Analysis 3

- Insert Dependent Source Condition Equations into KCL equations
  - SN:

$$\frac{2V - v_2}{1\Omega} + \frac{v_3 - 2.5v_2}{1\Omega} + \left(-\frac{v_2}{2\Omega}\right) + 2\Omega^{-1}(2V - v_3) = 0$$
$$\Rightarrow v_2\left[4\Omega^{-1}\right] + v_3\left[1\Omega^{-1}\right] = 6A$$

  - Node 3:

$$\frac{2V - v_3}{2\Omega} + \frac{2.5v_2 - v_3}{1\Omega} = 9A$$
$$\Rightarrow v_2\left[2.5\Omega^{-1}\right] + v_3\left[-1.5\Omega^{-1}\right] = 8A$$

- Solve for v_2, v_3

$$\begin{bmatrix} 4\Omega^{-1} & 1\Omega^{-1} \\ 2.5\Omega^{-1} & -1.5\Omega^{-1} \end{bmatrix} \begin{bmatrix} v_2 \\ v_3 \end{bmatrix} = \begin{bmatrix} 6A \\ 8A \end{bmatrix}$$
$$\Rightarrow \begin{bmatrix} v_2 \\ v_3 \end{bmatrix} = \begin{bmatrix} +2V \\ -2V \end{bmatrix}$$

Multisim Simulation

V2 ABM_Voltage Defined by:

$3 * I(vv3)$

I2 ABM_Current Defined by:

2*(v(1)-v(3))

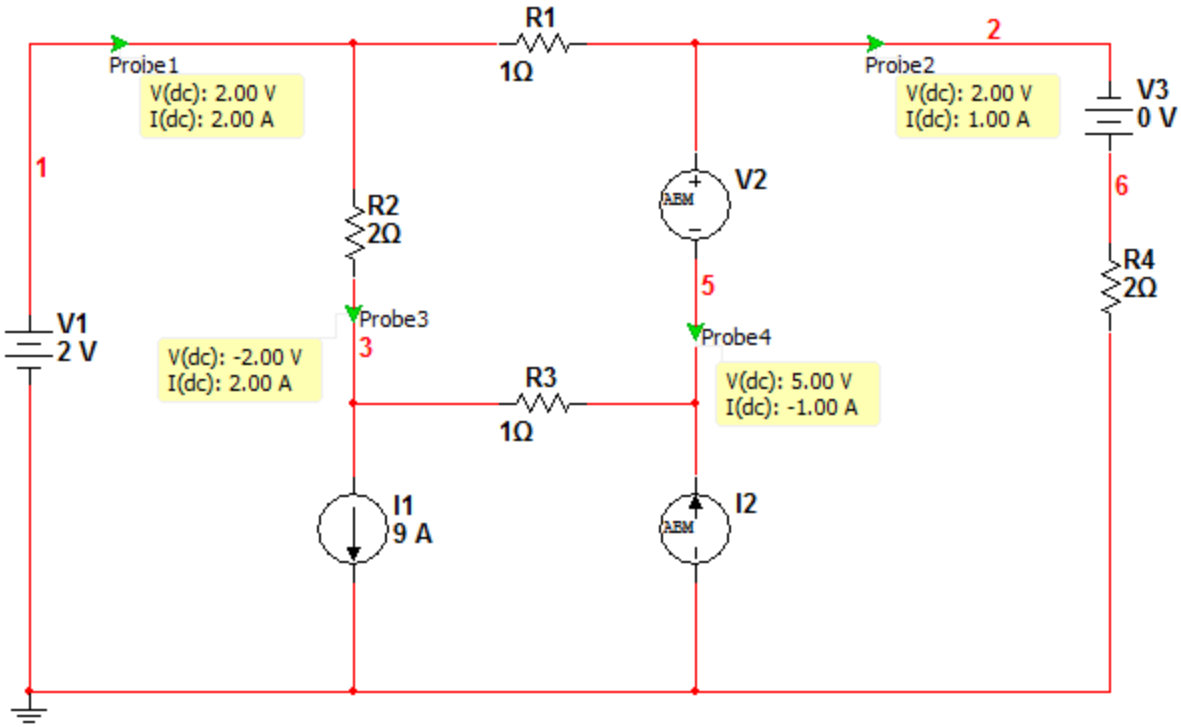

Orcad Pspice solution

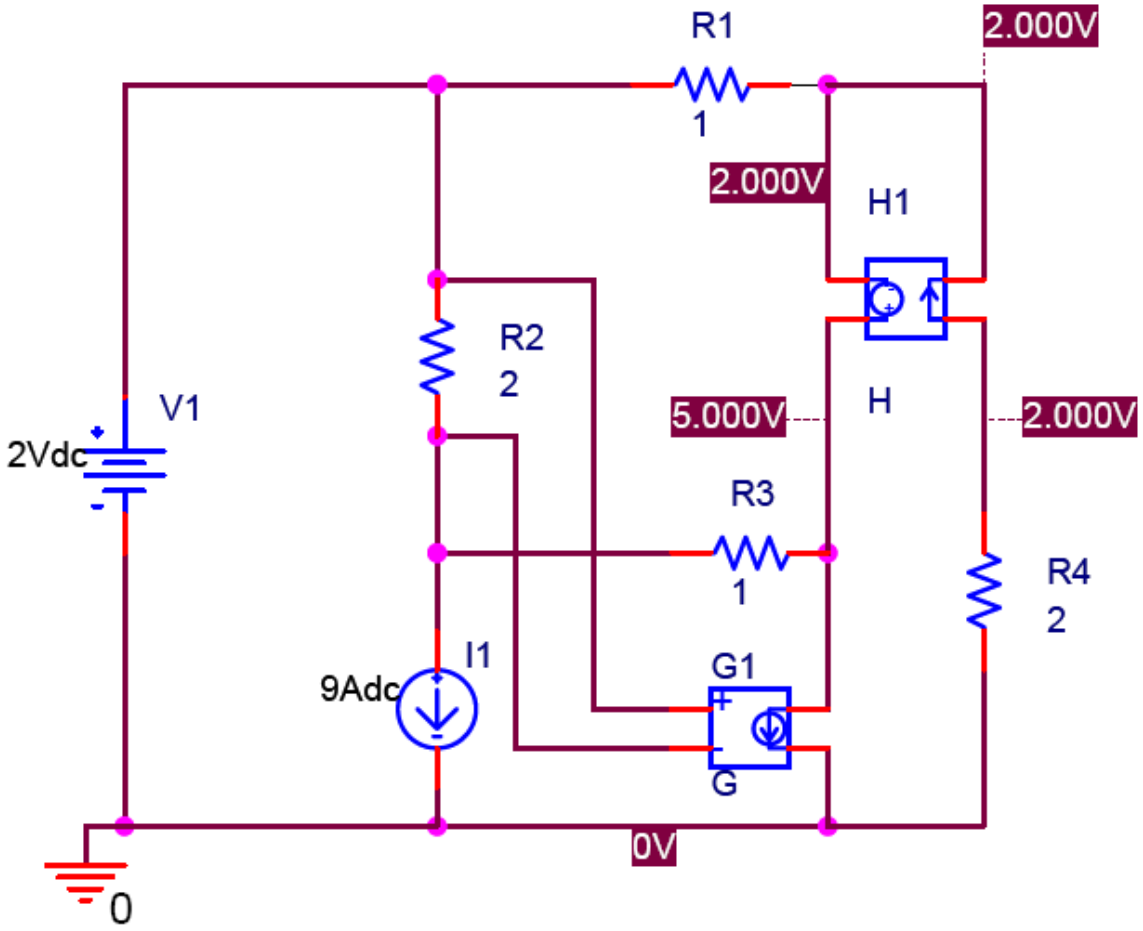

"Linking" Supernodes Example

- **Find V_x, i_x**
- **There's any easy, fairly obvious way**
- **I'll do it the <u>least</u> obvious way to illustrate super-nodes again**

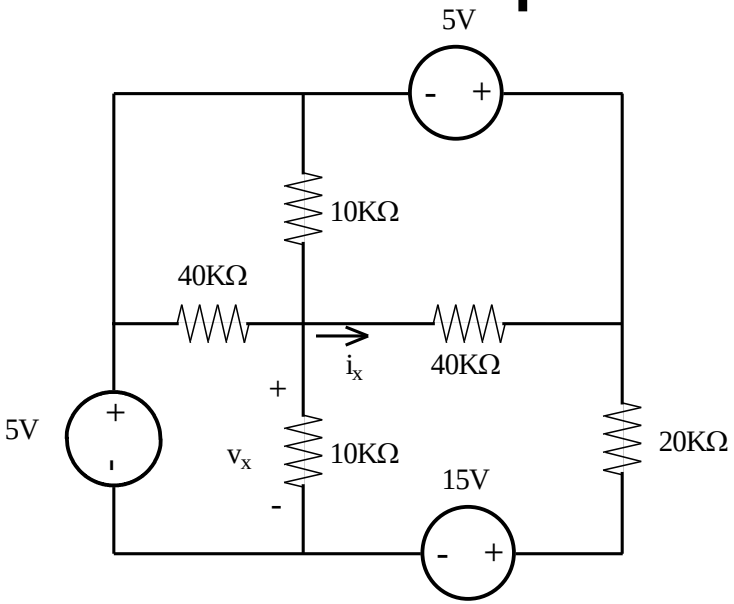

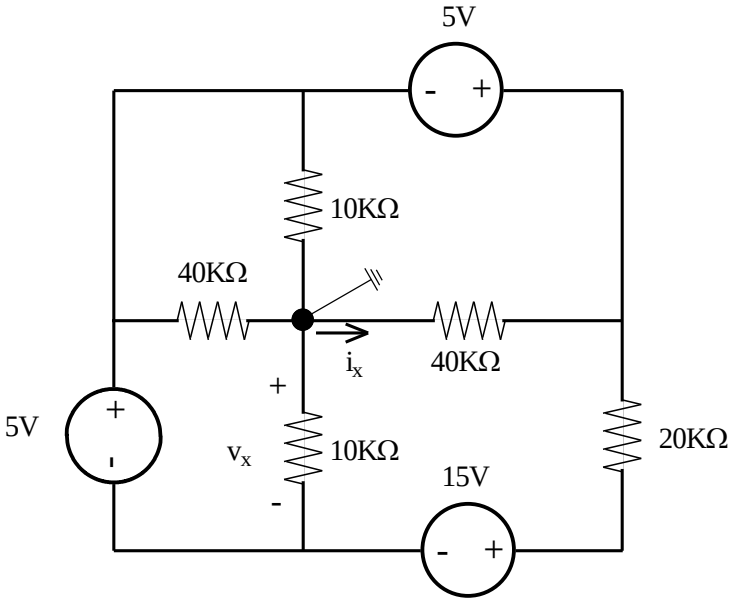

"Obvious" Way

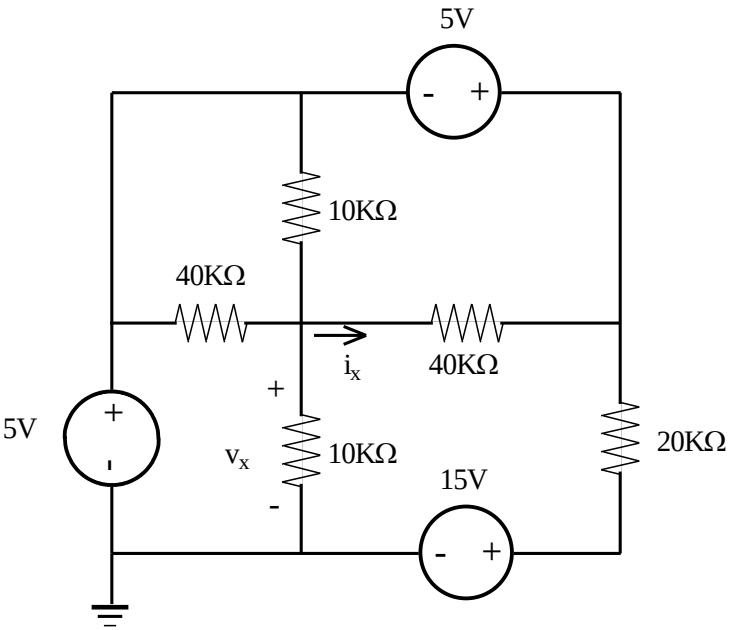

"Obvious" Way

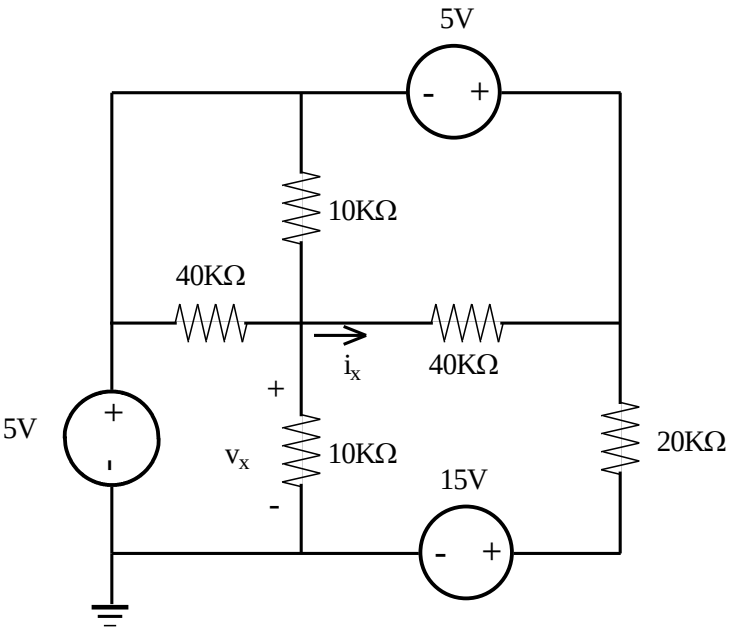

Identify the Super-node(s)

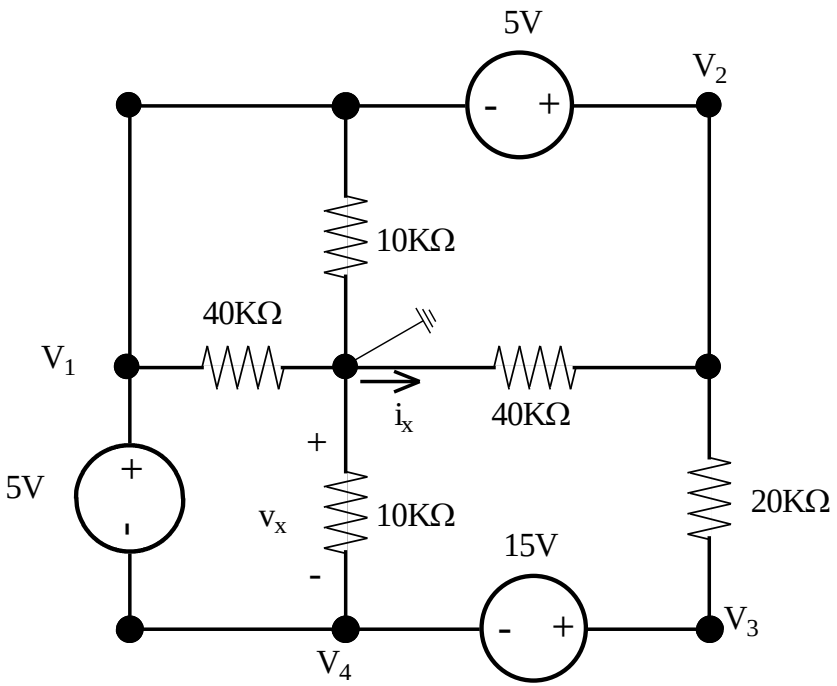

Solve

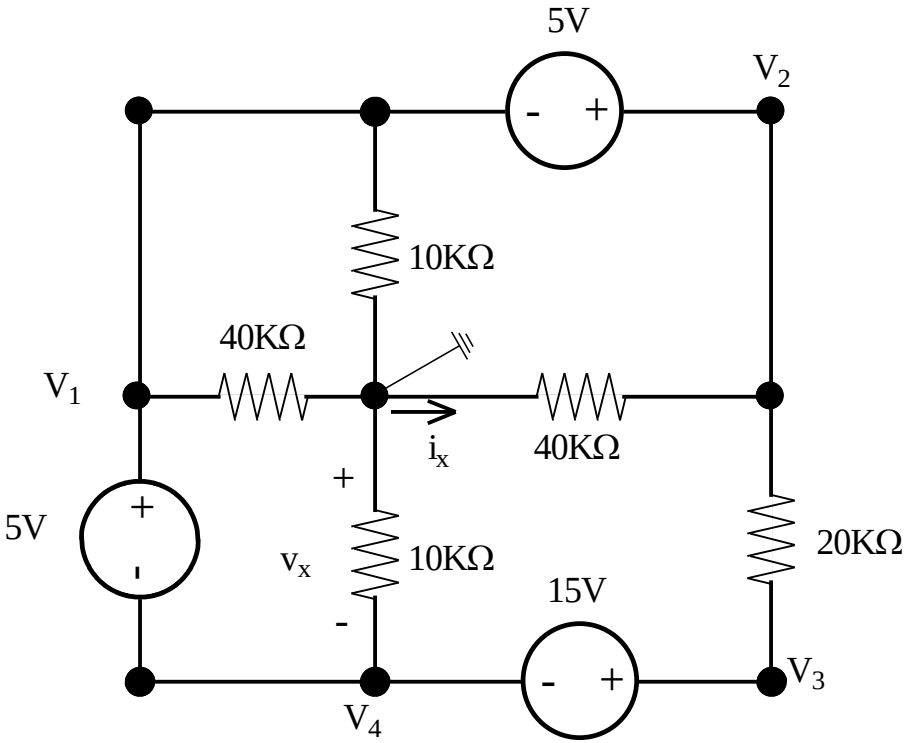

Solve

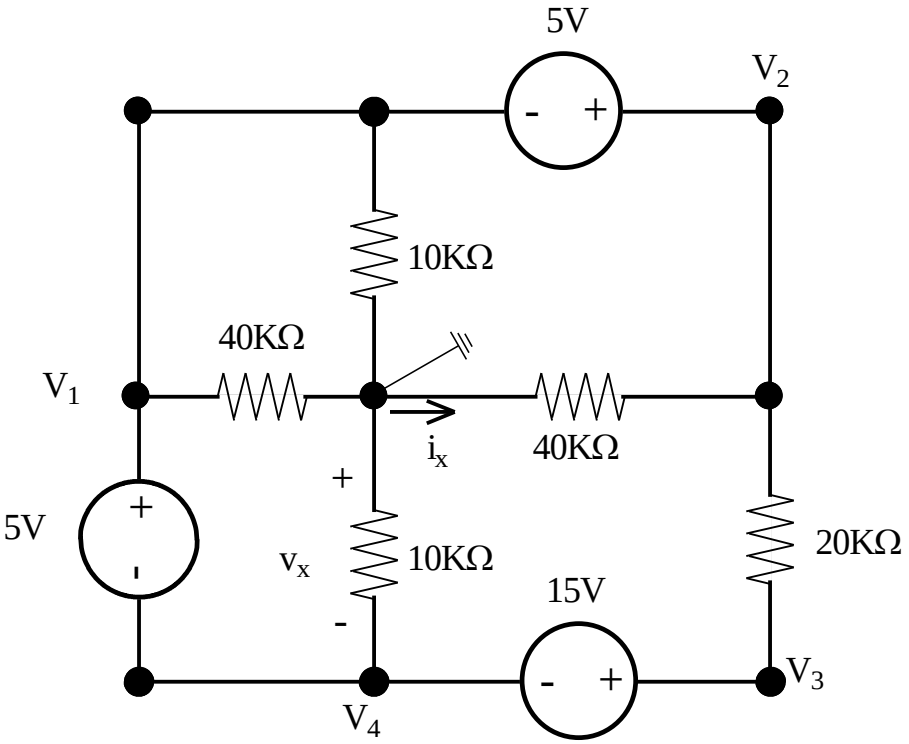

Old Exam Problem: Some Less Obvious Stuff

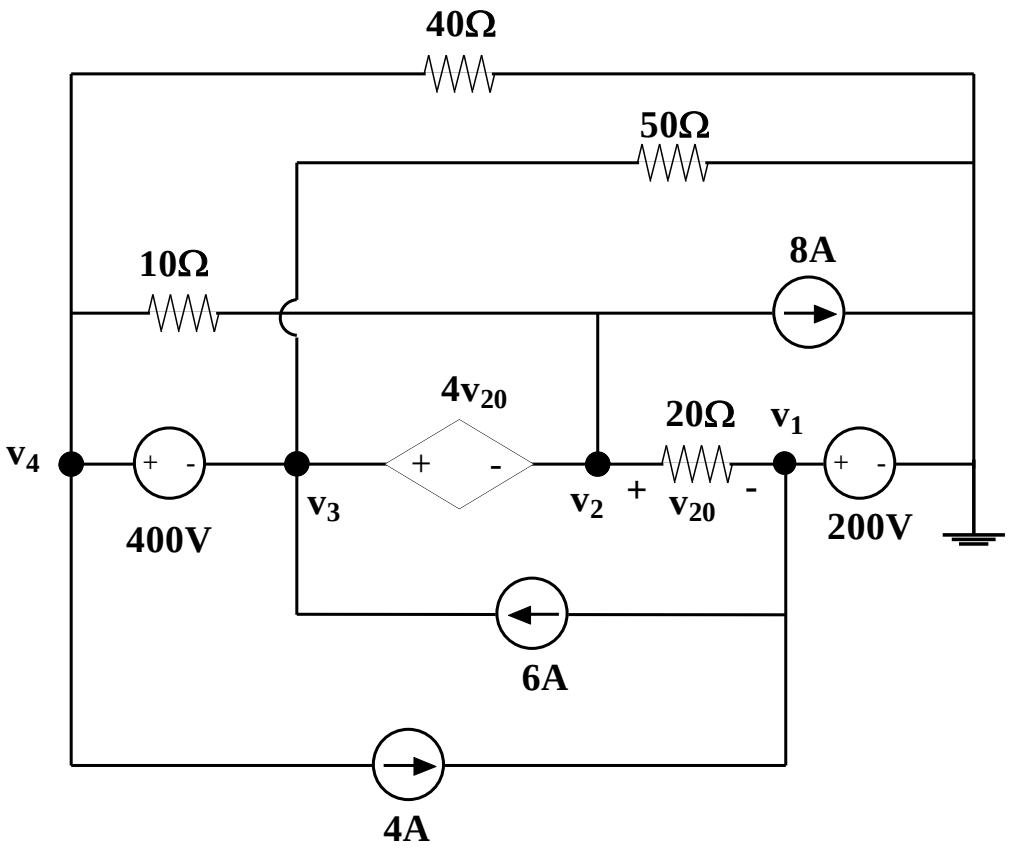

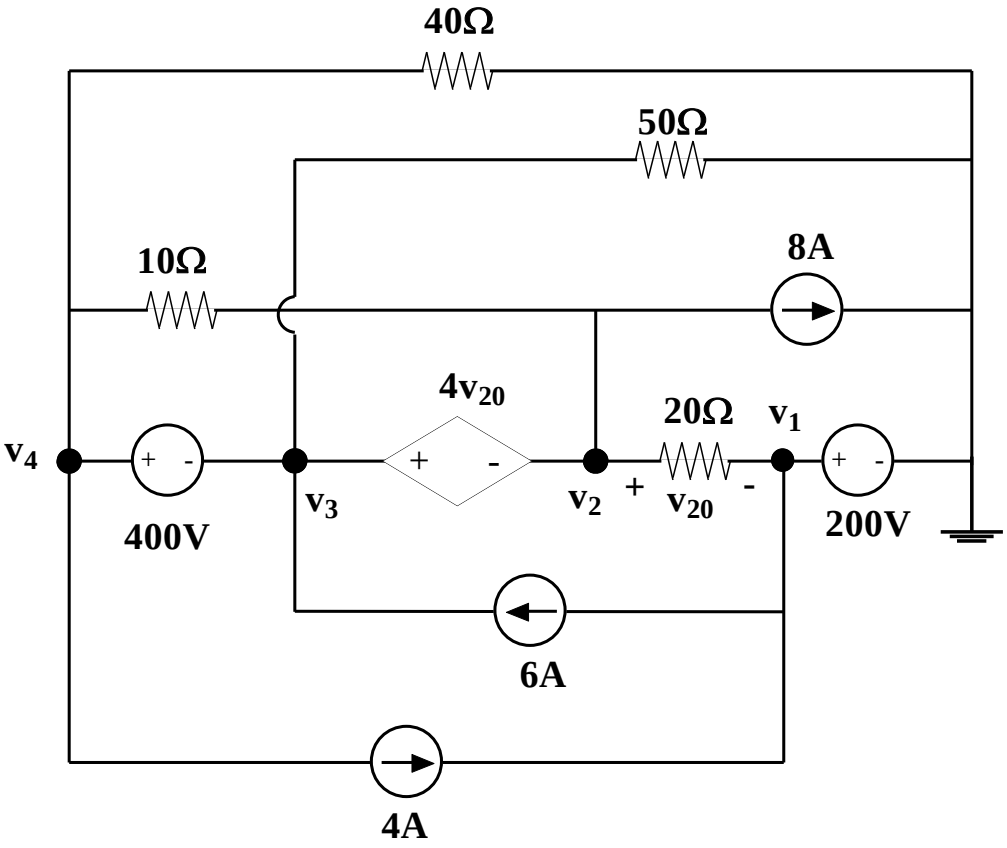
40Ω
50Ω
10Ω
8A
4v20
20Ω
v1
v4
+ -
+ -
+ -
400V
v3
v2
+
v20
-
200V
6A
4A

Generalized Nodal Analysis

$$i_3 + \left(\frac{v_1 - v_2}{20\Omega}\right) + 6A - 4A = 0 \qquad \textit{KCL Node 1}$$

$$-i_2 + \left(\frac{v_2 - v_1}{20\Omega}\right) + \left(\frac{v_2 - v_4}{10\Omega}\right) + 8A = 0 \qquad \textit{KCL Node 2}$$

$$i_2 - 6A - i_1 + \left(\frac{v_3}{50\Omega}\right) = 0 \qquad \textit{KCL Node 3}$$

$$i_1 + \left(\frac{v_4 - v_2}{10\Omega}\right) + \left(\frac{v_4}{40\Omega}\right) + 4A = 0 \qquad \textit{KCL Node 4}$$

$$v_1 = 200V \qquad \textit{KVL}$$

$$v_3 - v_2 = 4v_{20} \qquad \textit{KVL}$$

$$v_4 - v_3 = 400V \qquad \textit{KVL}$$

$$v_{20} = v_2 - v_1 \qquad \textit{KVL / Dependent Source Variable}$$

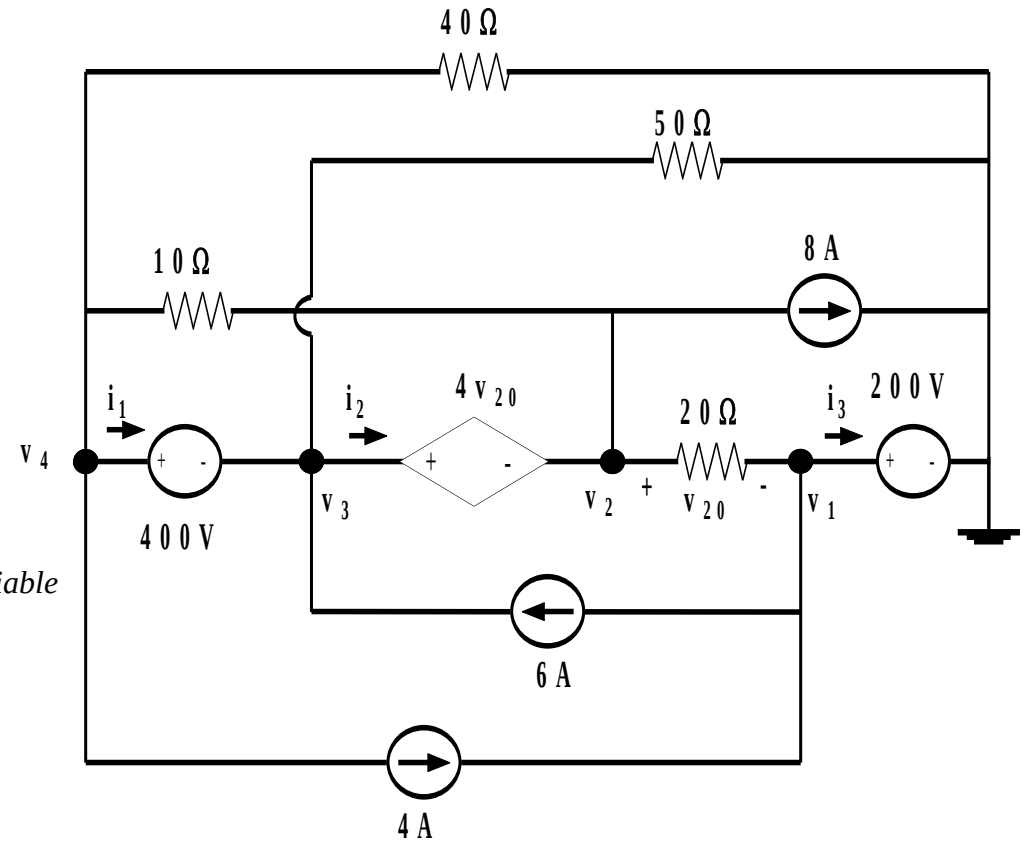

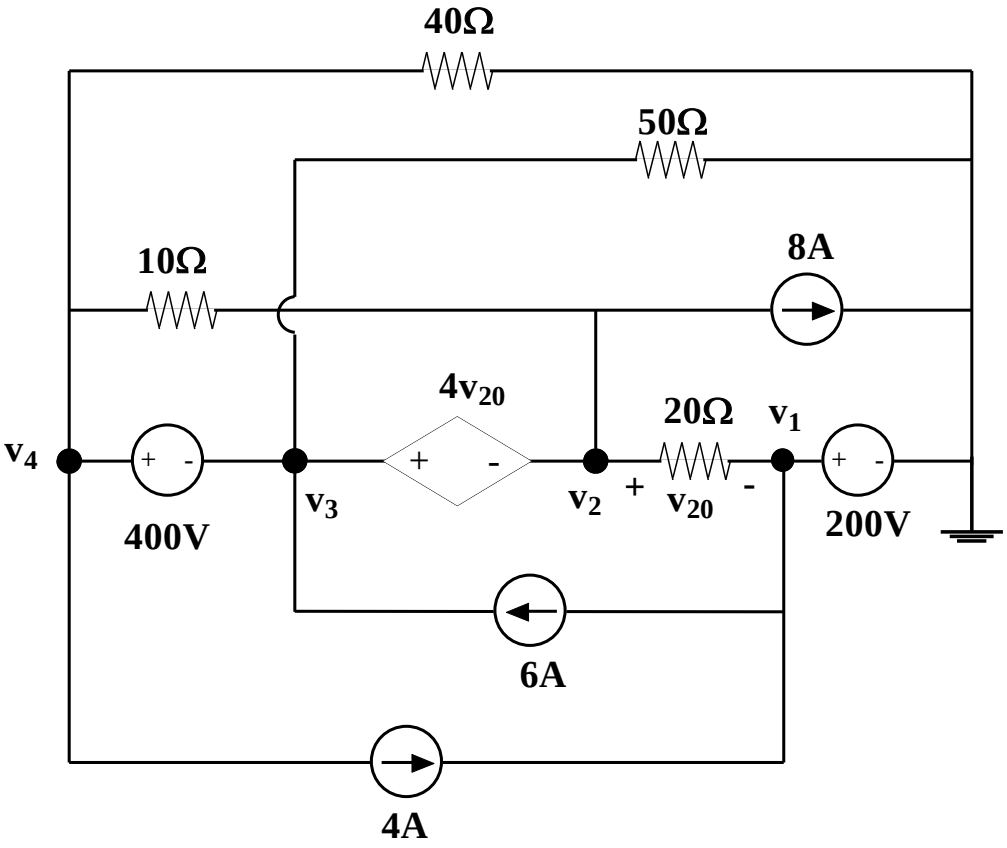

{{v2 -> 1200/11, v3 -> -(2800/11),
v4 -> 1600/11, i1 -> -(124/11),
i2 -> -(2/11), i3 -> -(72/11)}}
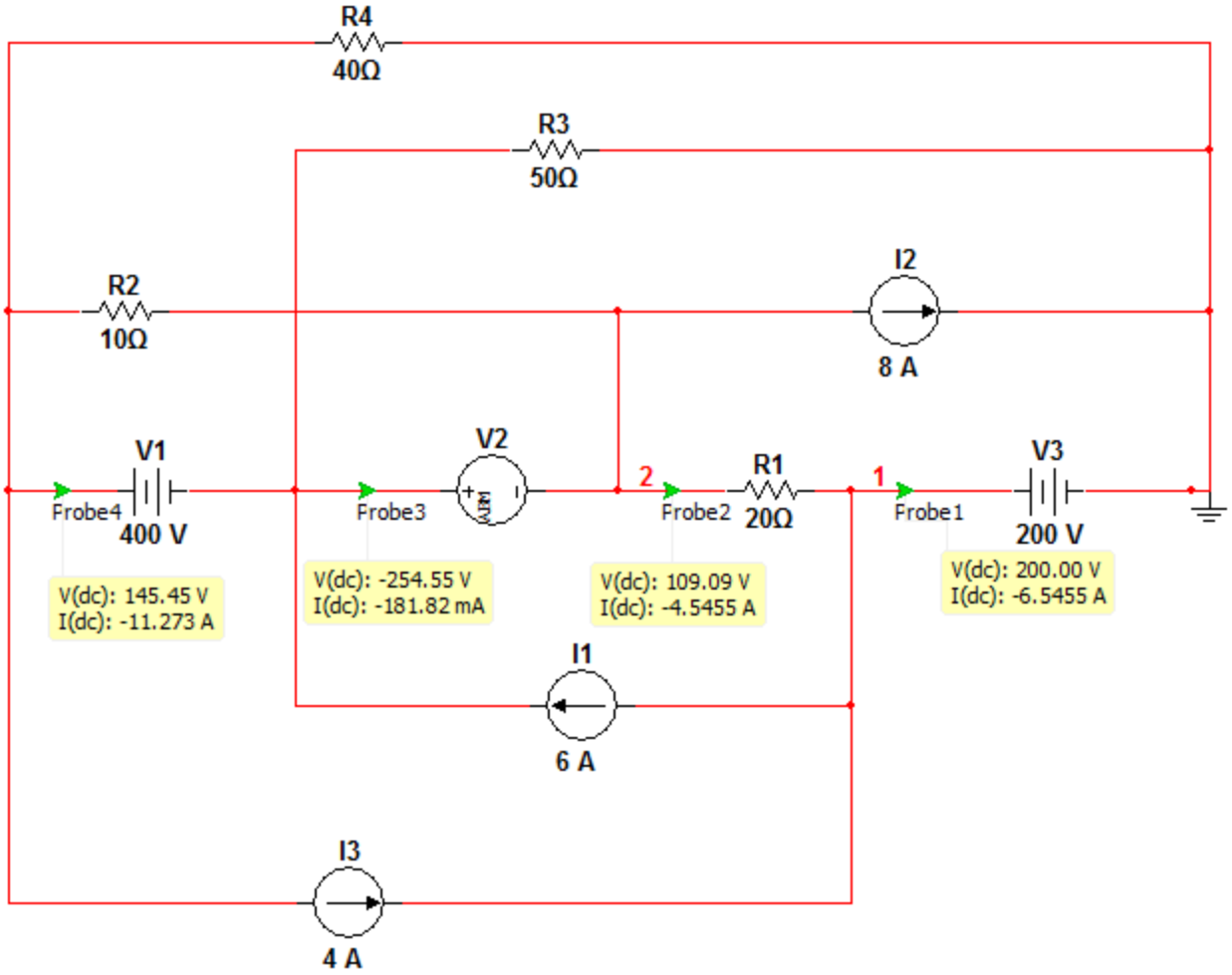
Multisim Simulation