RESISTIVE CIRCUITS

Credit to F. Ulaby

EECS 215: Intro. Circuits (F. Terry FA13)

Ohm's Law

Voltage across resistor is proportional to current

$$v = iR$$

$$R = \frac{v}{i}$$

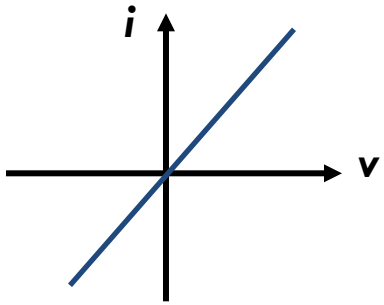

Resistance: ability to resist flow of electric current

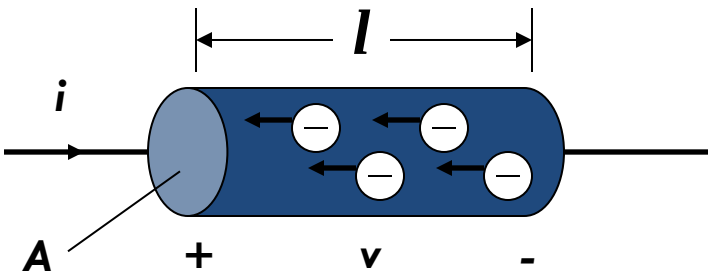

$$R = \frac{\rho l}{A} \quad \text{Standard units } \Omega$$

$$\rho = \text{Resistivity Standard units } \Omega - m$$

resistivity is a material parameter (this should become clear in 230&320)

Ohm's Law

Voltage across resistor is proportional to current

$$\upsilon = iR$$

$$R = \frac{\upsilon}{i}$$

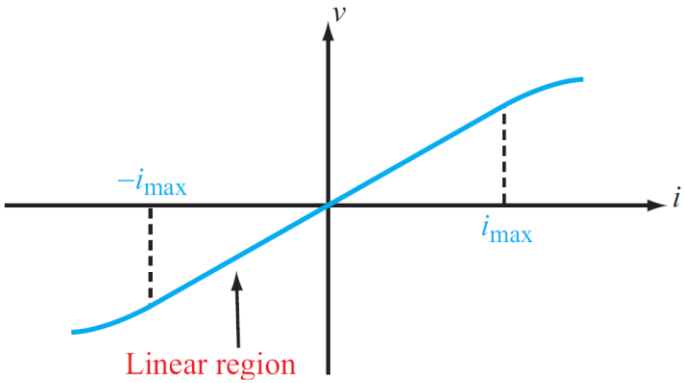

Resistance: ability to resist flow of electric current

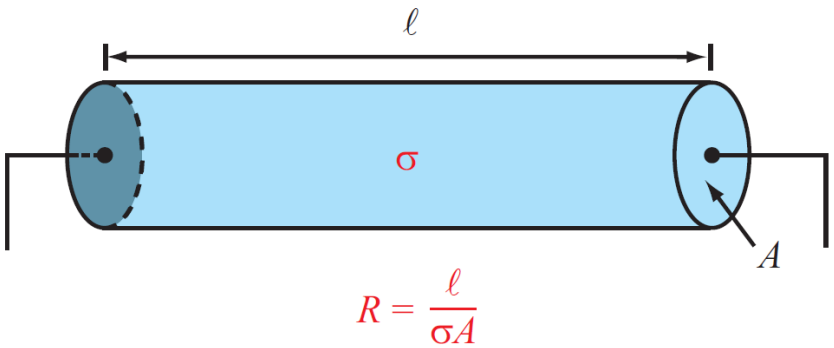

$$R = \frac{\ell}{\sigma A} = \rho \frac{\ell}{A} \qquad (\Omega),$$

ρ = **resistivity**

Conductivity

Table 2-1: Conductivity and resistivity of some common materials at 20°C.

Material	Conductivity σ (S/m)	Resistivity ρ (Ω-m)
Conductors		
Silver	6.17×10^{7}	1.62×10^{-8}
Copper	5.81×10^{7}	1.72×10^{-8}
Gold	4.10×10^{7}	2.44×10^{-8}
Aluminum	3.82×10^{7}	2.62×10^{-8}
Iron	1.03×10^{7}	9.71×10^{-8}
Mercury (liquid)	1.04×10^{6}	9.58×10^{-8}
Semiconductors		
Carbon (graphite)	7.14×10^{4}	1.40×10^{-5}
Pure germanium	2.13	0.47
Pure silicon	4.35×10^{-4}	2.30×10^{3}
Insulators		
Paper	$\sim 10^{-10}$	$\sim 10^{10}$
Glass	$\sim 10^{-12}$	$\sim 10^{12}$
Teflon	$\sim 3.3 \times 10^{-13}$	$\sim 3 \times 10^{12}$
Porcelain	$\sim 10^{-14}$	$\sim 10^{14}$
Mica	$\sim 10^{-15}$	$\sim 10^{15}$
Polystyrene	$\sim 10^{-16}$	$\sim 10^{16}$
Fused quartz	$\sim 10^{-17}$	$\sim 10^{17}$

Table 2-3: Common resistor terminology.

Thermistor	R sensitive to temperature
Piezoresistor	R sensitive to pressure
Rheostat	2-terminal variable resistor
Potentiometer	3-terminal variable resistor

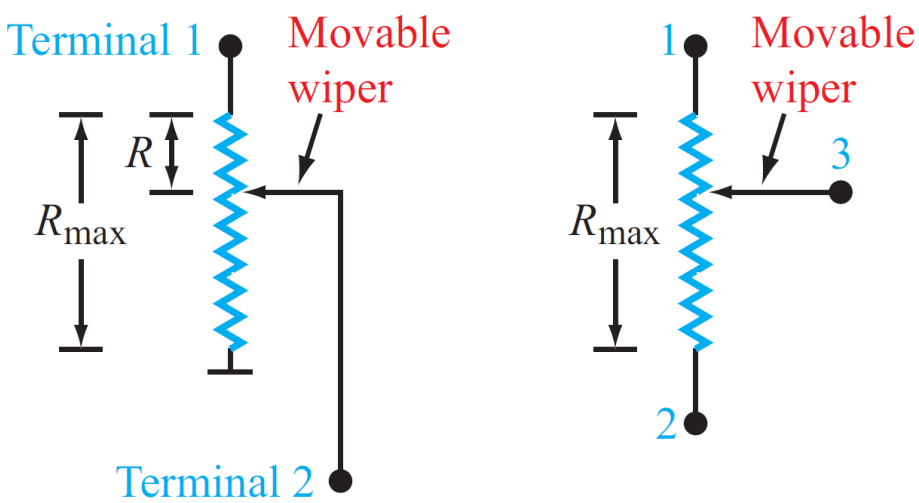

(a) Rheostat (b) Potentiometer

Tech Brief 4: Resistors As Sensors

- Piezoresistive Sensors

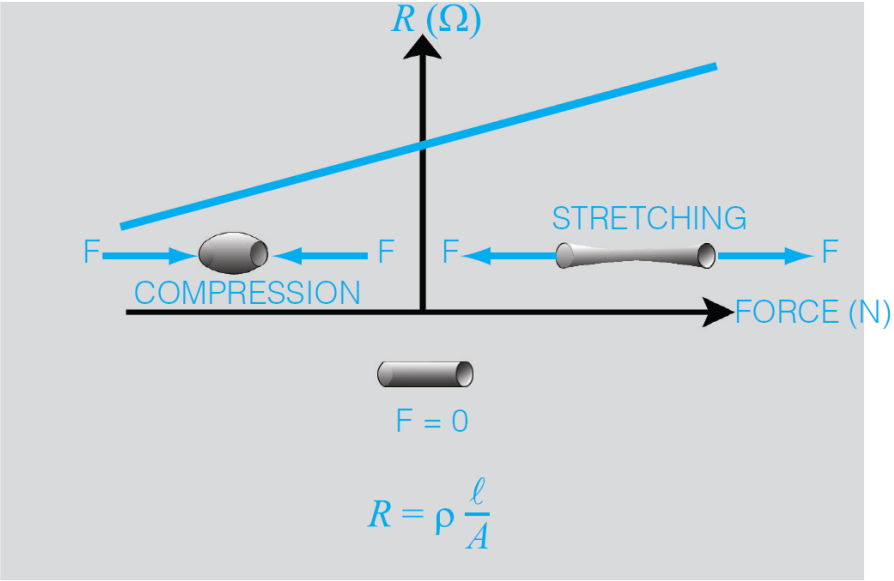

Figure TF4-1: Piezoresistance varies with applied force. The word "piezein" means "to press" in Greek.

$$R = R_0 + \Delta R = R_0(1 + \alpha P).$$

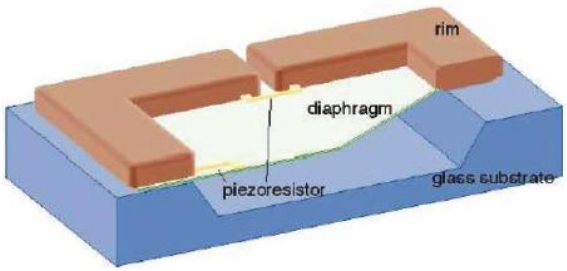

(a) Schematic

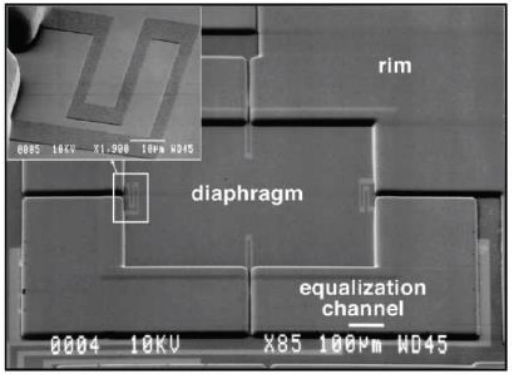

(b) Scanning electron micrograph (SEM) of the sensor

Figure TF4-2: A microfabricated pressure sensor developed at the University of Michigan. It uses piezoresistors to detect deformation of a membrane; when the membrane (white) deflects, it stretches the piezoresistor and the resistance changes. (Courtesy of Khalil Najafi, University of Michigan.)

Tech Brief 4: Resistors As Sensors

- Thermistor Sensors

$$\Delta R = k \Delta T,$$

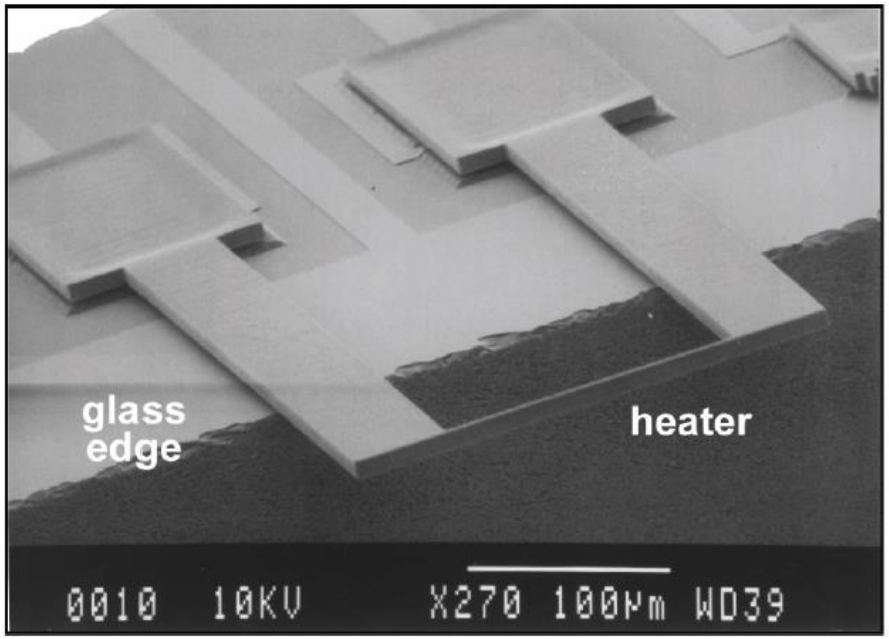

Figure TF4-3: This micromachined anemometer is a thermistor that measures fluid velocity; as fluid flows by, it cools the thermistor at different rates, depending on the fluid velocity. (Courtesy of Khalil Najafi, University of Michigan.)

Tech Brief 3: Superconductivity

- ***Critical temperature Tc is the temperature at which a material becomes superconducting (zero resistance & no power dissipation)***

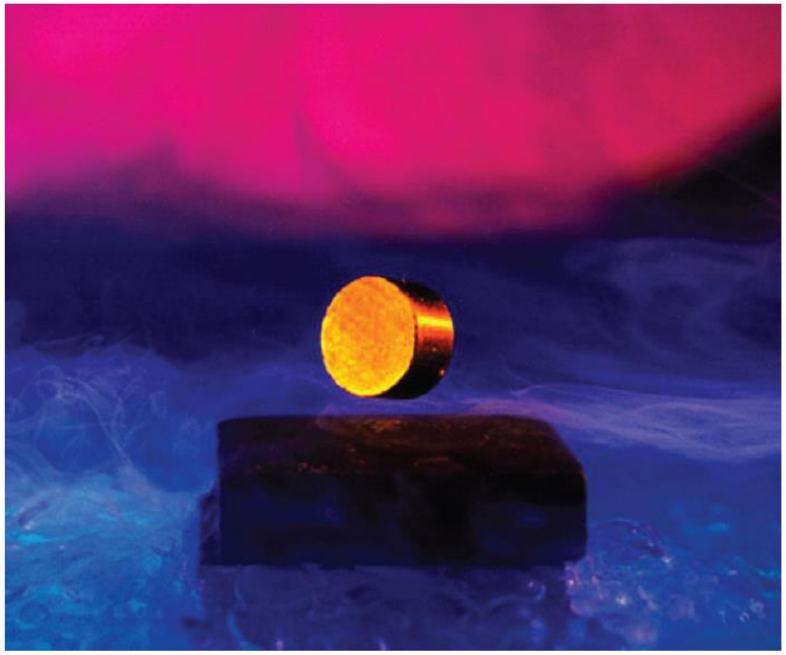

Figure TF3-1: The Meissner effect, or strong diamagnetism, seen between a high-temperature superconductor and a rare earth magnet. (Courtesy of Pacific Northwest National Laboratory.)

Figure TF3-2: Maglev train. (Courtesy of Central Japan Railway Company.)

Figure TF3-3: Magnetic Resonance Imaging machine. (Courtesy GE Healthcare.)

Circuit Terminology

Branch: single element, such as a resistor or source

Node: connection point between two or more branches

Loop: closed path in a circuit

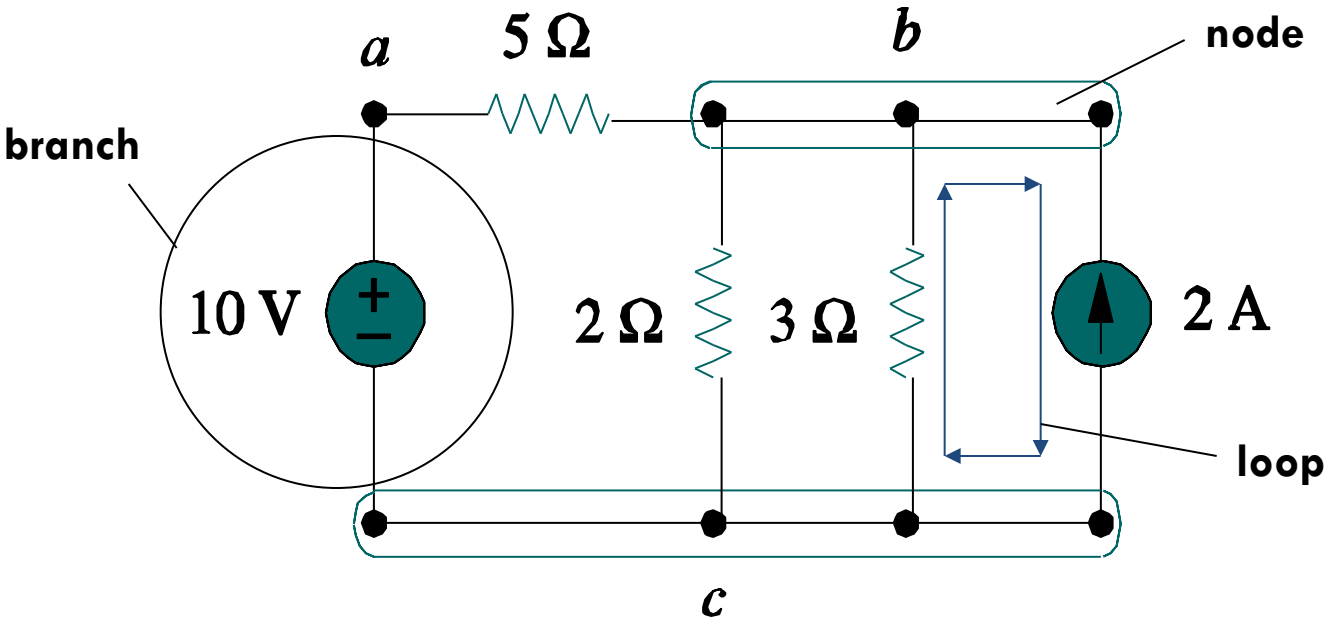

Planar Circuits

- Planar circuits: can be drawn in 2-D without branches crossing
- Whenever possible, re-draw circuit to simplify!

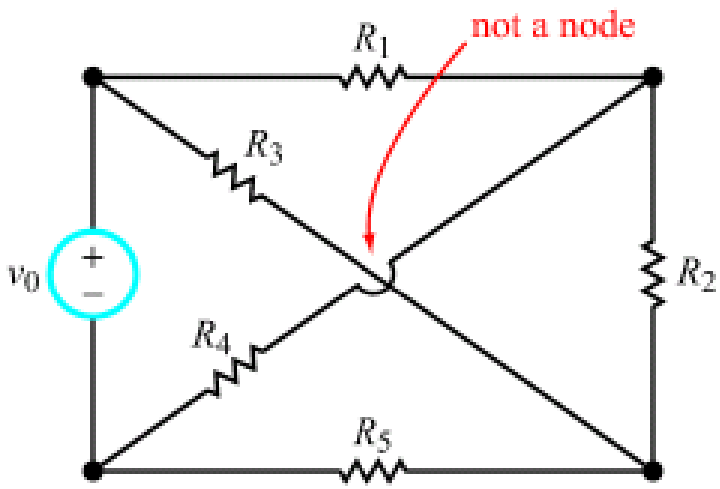

Original circuit

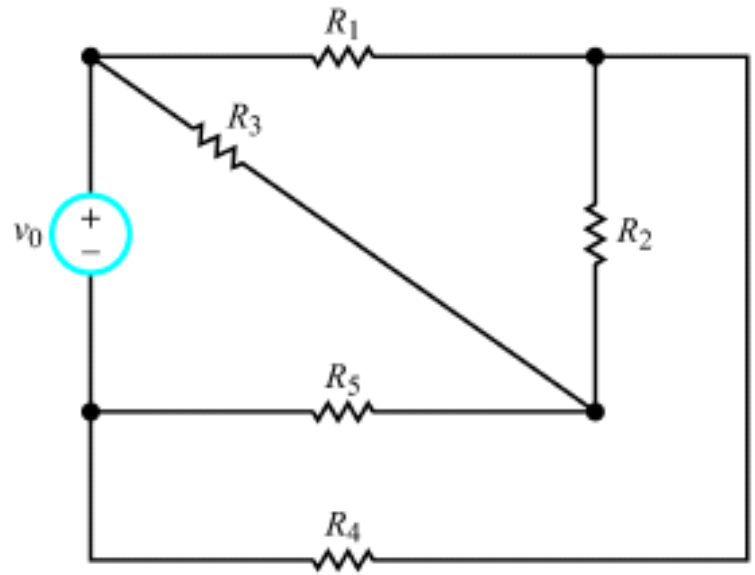

(b) Redrawn

Kirchoff's Current Law

Sum of currents entering a node is zero

Also holds for closed boundary

$$\sum_n I_n = 0$$

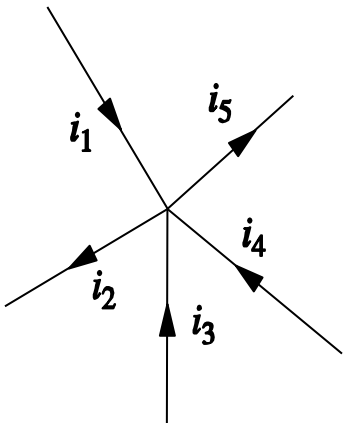

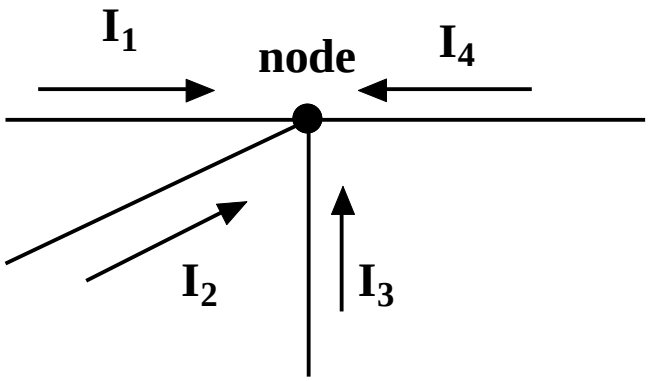

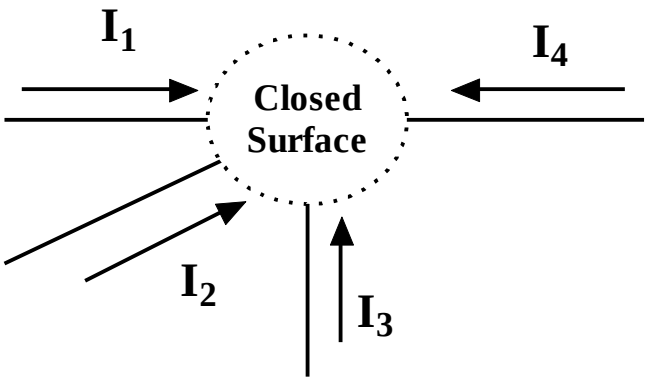

$$(I_1 + I_2 + I_3 + I_4) = 0$$

Amplifying the Closed Surface Part of KCL

$$For\ Both\ Cases:$$

$$I_1 + I_2 + I_3 = 0$$

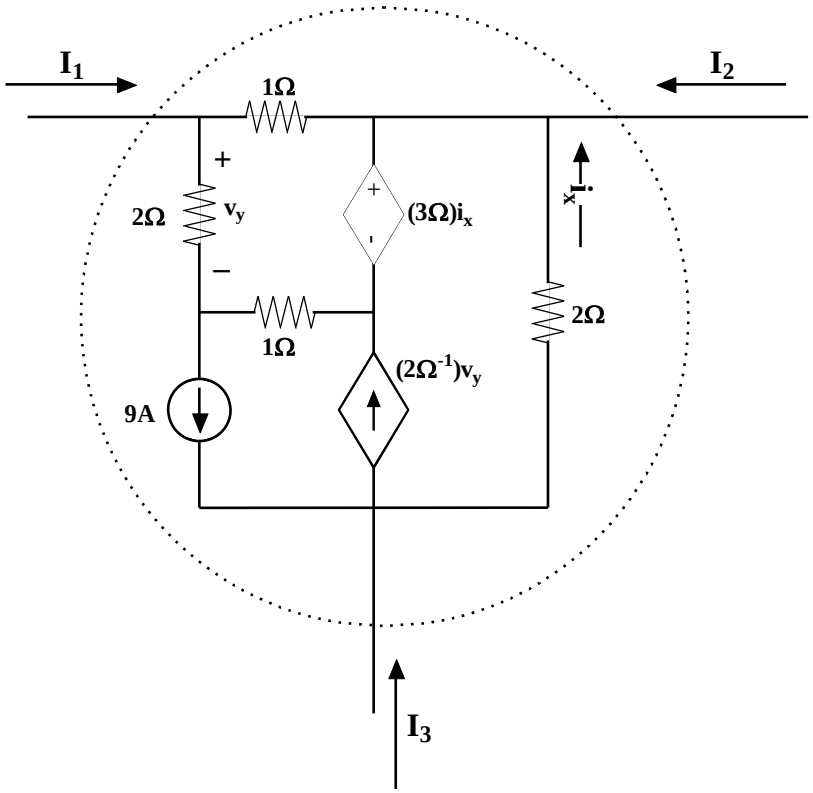

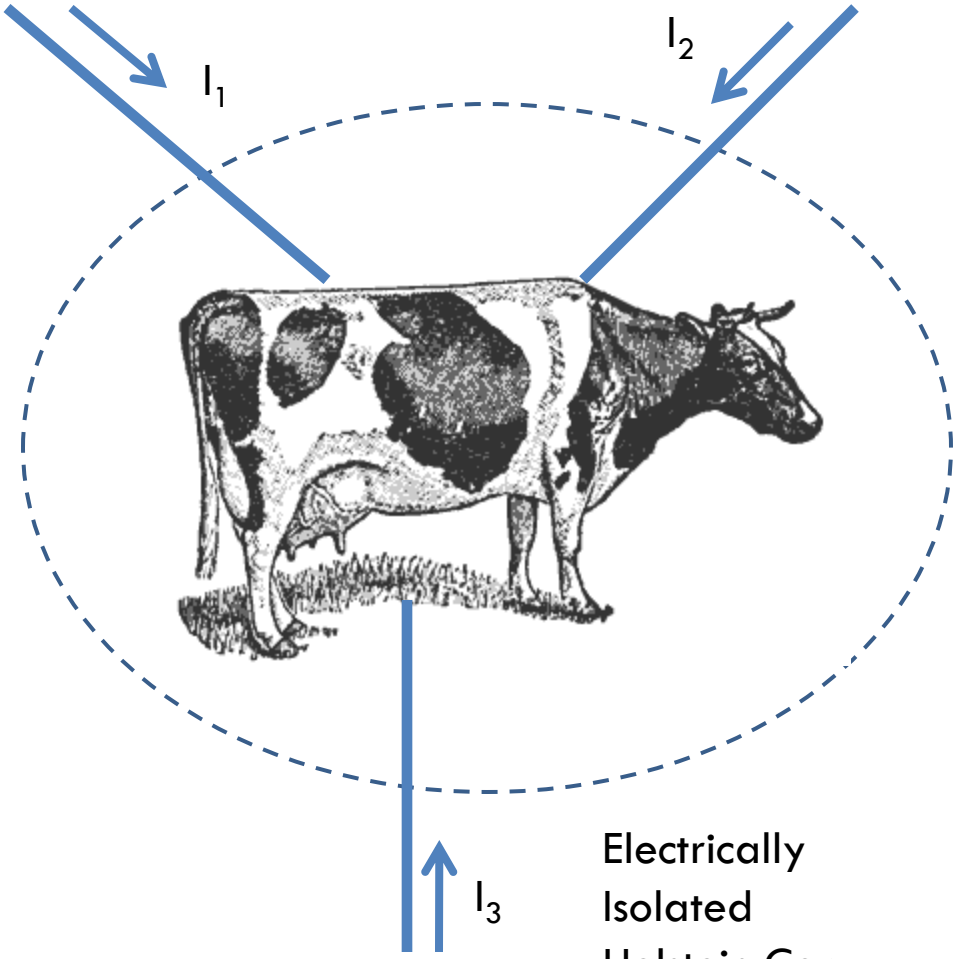

Electrically Isolated Holstein Cow

Kirchoff's Voltage Law (KVL)

Sum of voltages around a closed path is zero

Sum of voltage drops = sum of voltage rises

$$\sum_n V_n = 0$$

Define V_n's +/- in direction of loop

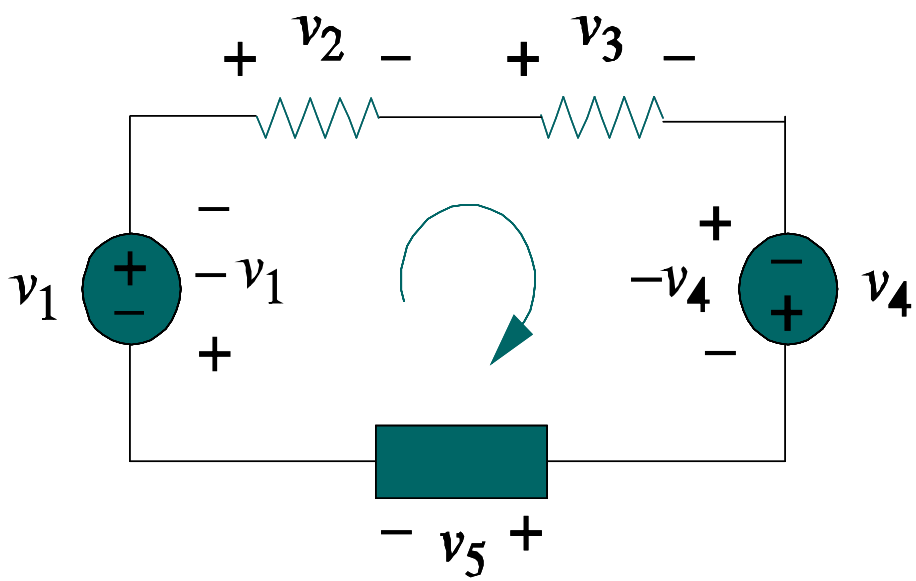

$$-v_1+v_2+v_3-v_4+v_5=0$$

$$v_2+v_3+v_5= v_1+v_4$$

Problem U&M 2.21 Example

2.21 Find I_1 to I_3 in the circuit of Fig. P2.21.

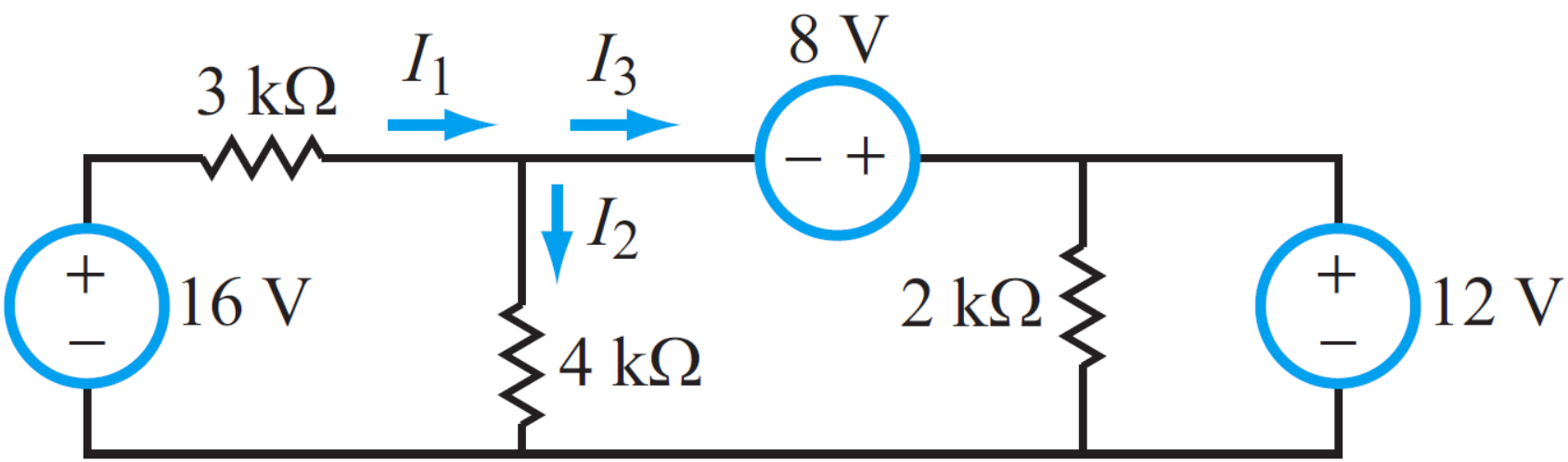

Figure P2.21: Circuit for Problem 2.21.

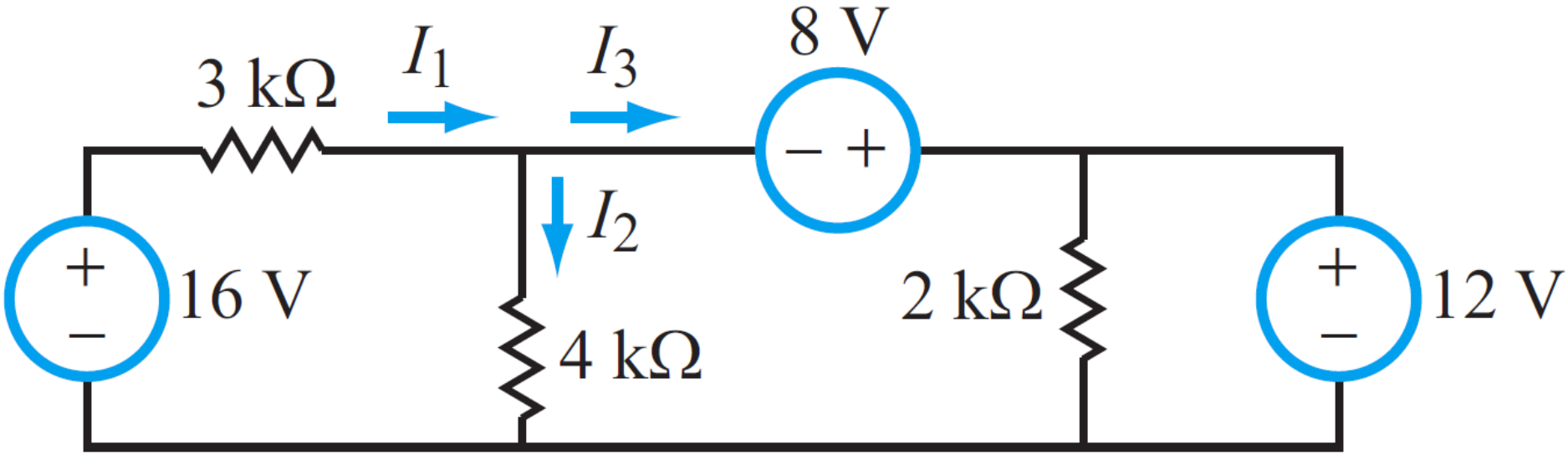
3 kΩ
I_1
I_3
8 V
− +
I_2
+
−
16 V
4 kΩ
2 kΩ
+
−
12 V

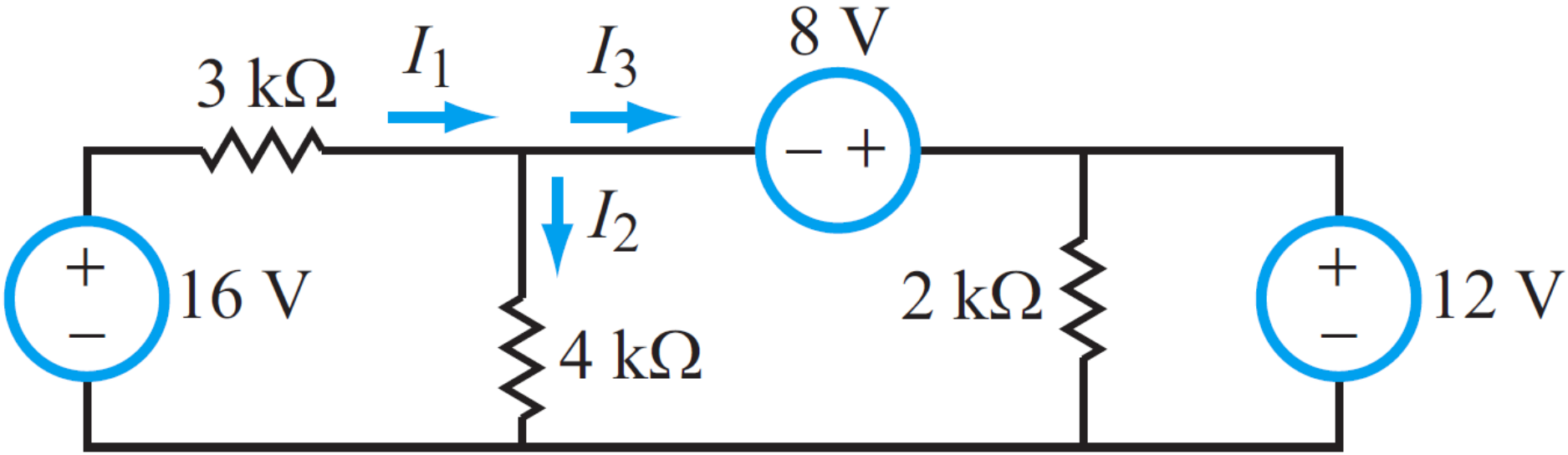
3 kΩ
I_1
I_3
8 V
− +
I_2
+
−
16 V
4 kΩ
2 kΩ
+
−
12 V

KVL Example

Suppose

$$V_{ac} = +5V$$

$$V_{bc} = -2V$$

$$V_{dc} = +2V$$

Then What Are:

$$V_{ab} =$$

$$V_{ad} =$$

$$V_{bd} =$$

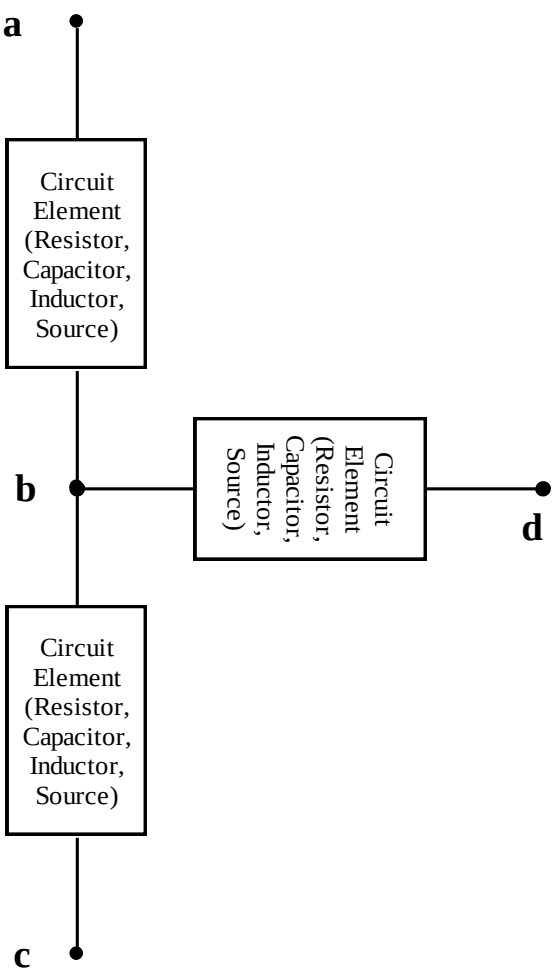

KVL Example: "by algebra"

Suppose

$V_{ac} = +5V$

$V_{bc} = -2V$

$V_{dc} = +2V$

Then What Are:

$V_{ab} =$

$V_{ad} =$

$V_{bd} =$

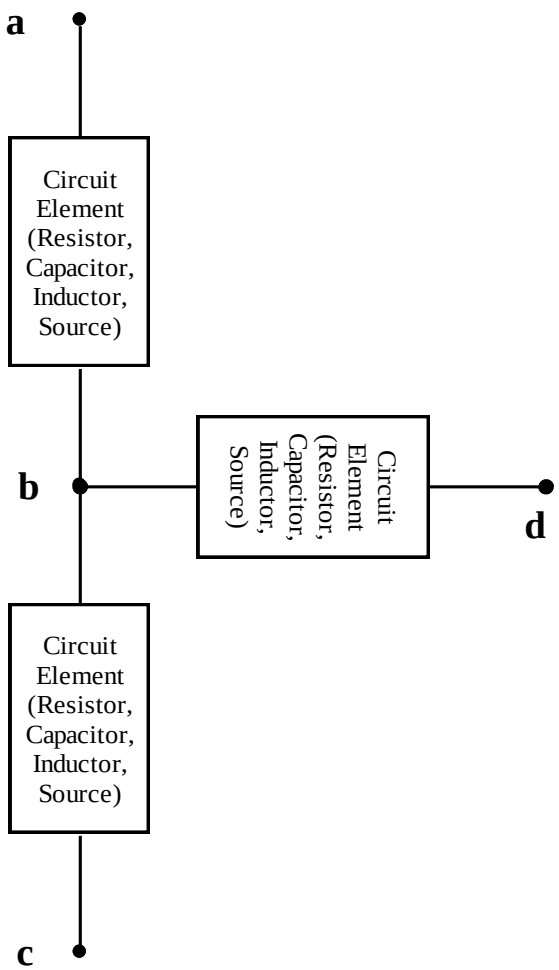

KVL Example: Loops

Suppose

$$V_{ac} = +5V$$

$$V_{bc} = -2V$$

$$V_{dc} = +2V$$

$$-V_{ac} + V_{ab} + V_{bc} = 0$$

$$\rightarrow V_{ab} = 5 - (-2) = +7V$$

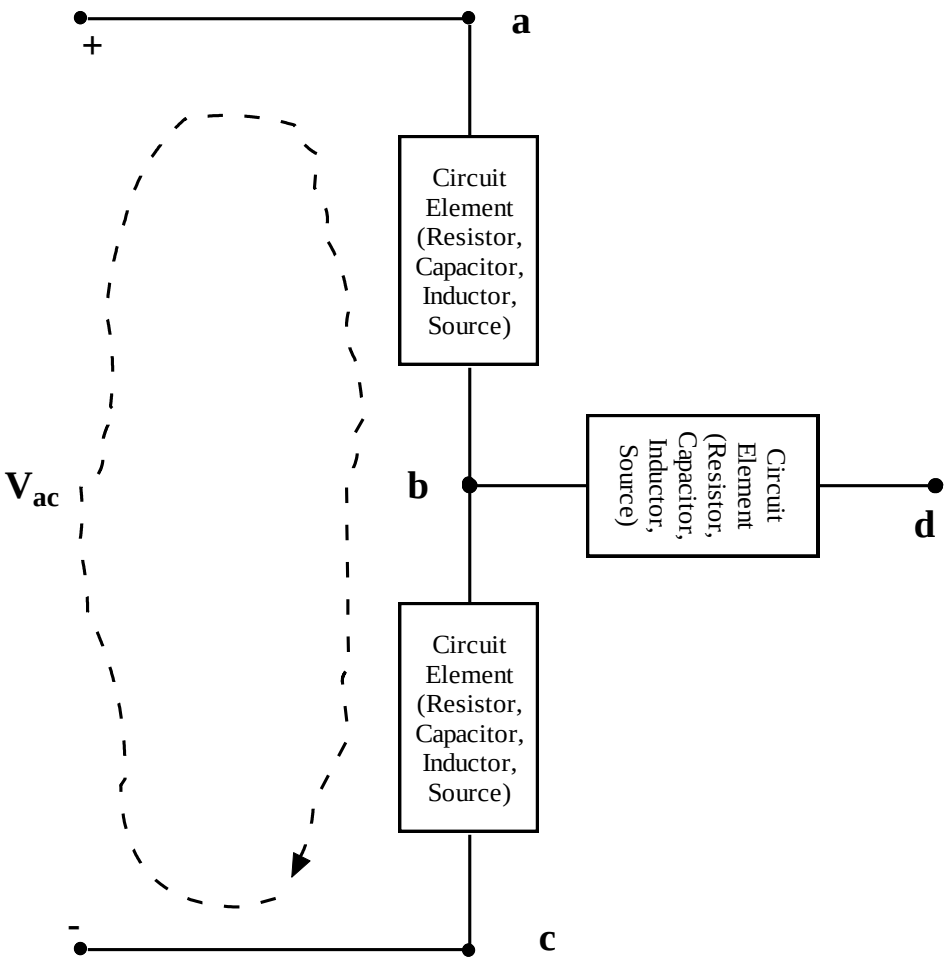

KVL Example

Suppose

$$V_{ac} = +5V$$

$$V_{bc} = -2V$$

$$V_{dc} = +2V$$

$$-V_{dc} - V_{ad} + V_{ac} = 0$$

$$\rightarrow V_{ad} = -V_{dc} + V_{ac}$$

$$V_{ad} = -2 + 5 = 3V$$

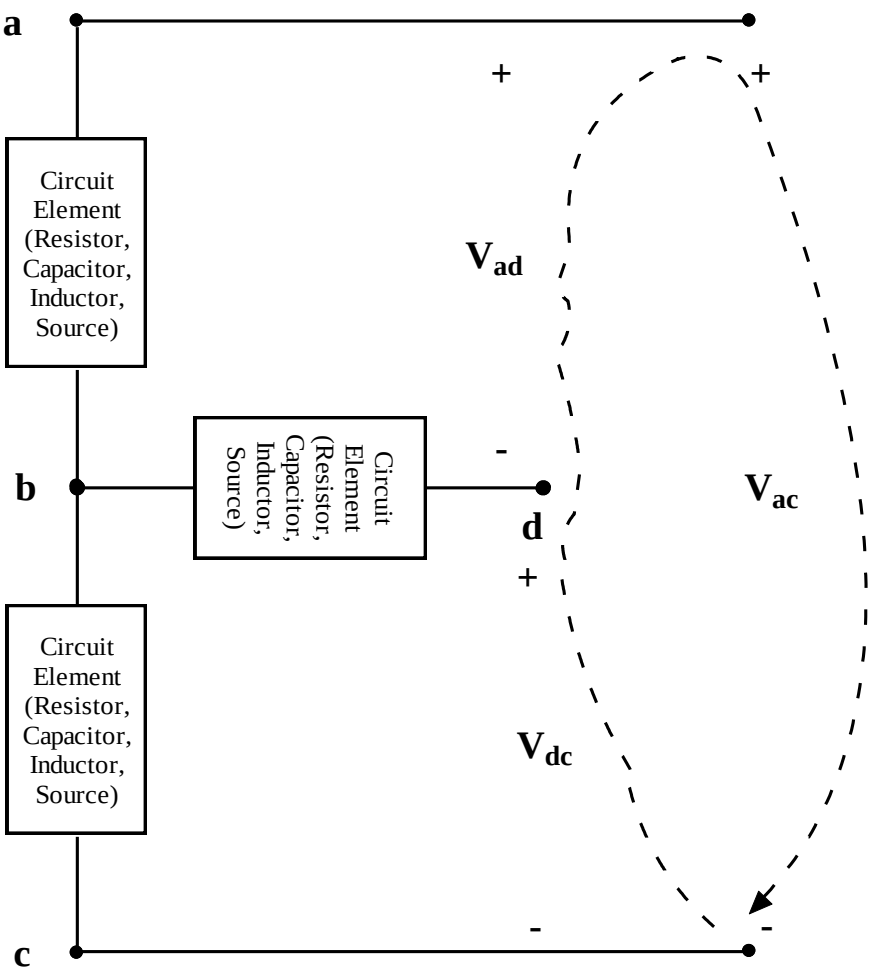

Fully Solved Circuit Example

Check KVL and KCL consistency of this solution. 4 KVL loops are suggested but you can do others.

How many nodes are there?

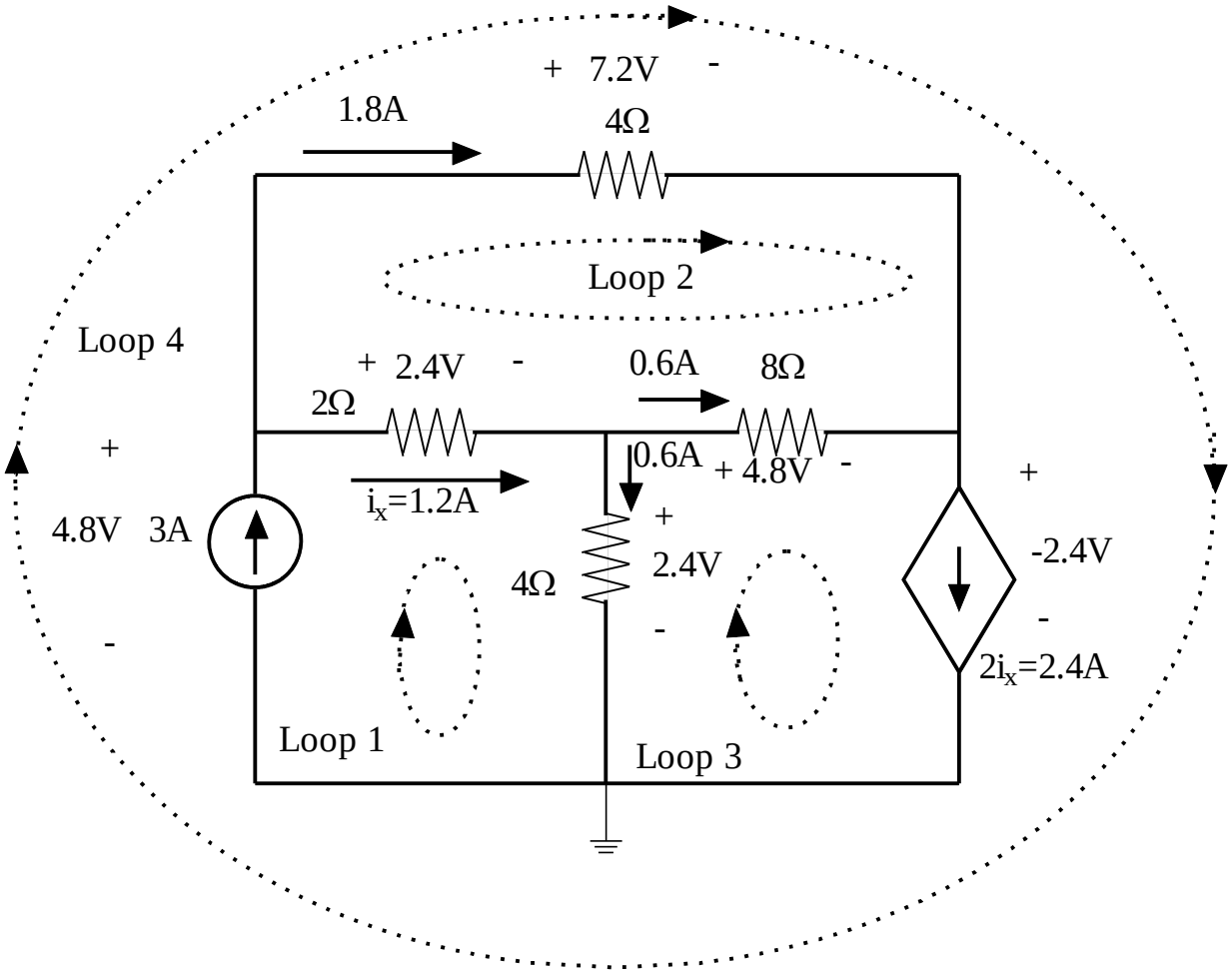

Fully Solved Circuit Example

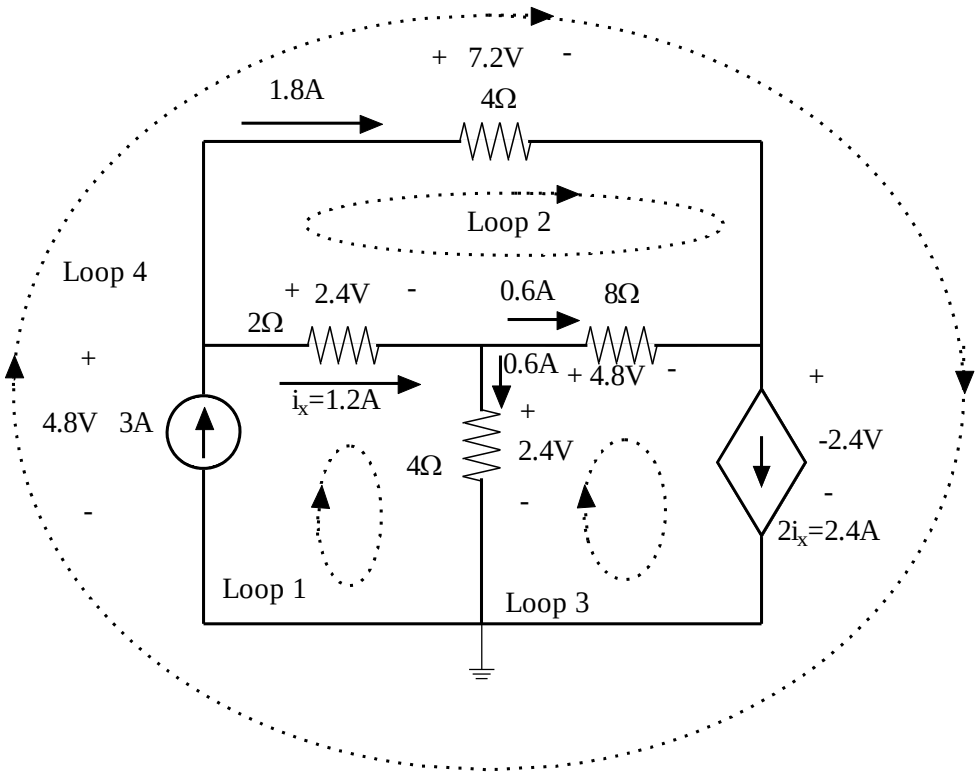

Equivalent Circuits

- If the current and voltage characteristics at nodes are identical, the circuit is considered "equivalent"
- Identifying equivalent circuits simplifies analysis

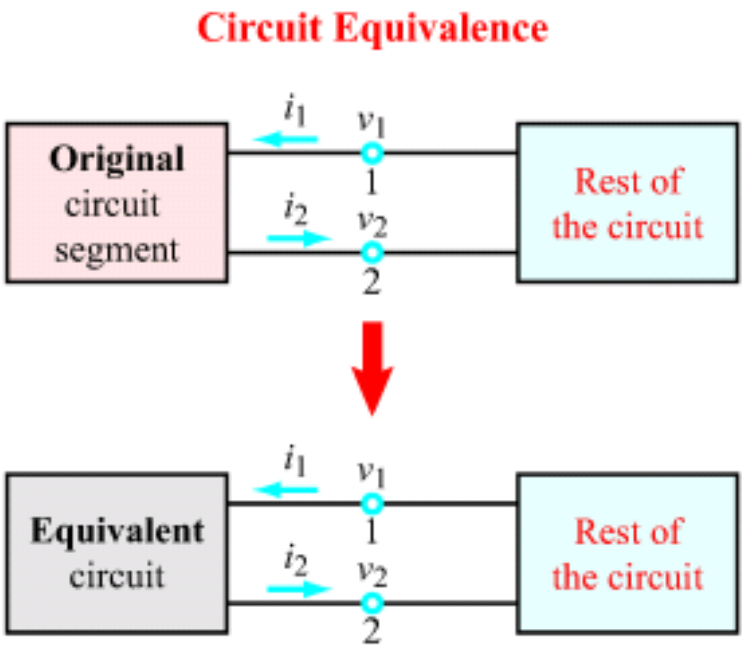

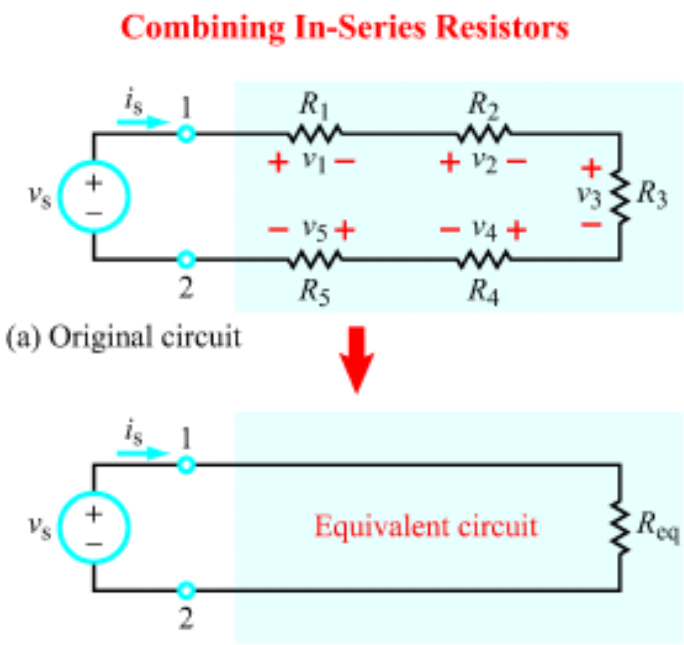

Resistors in Series

Equivalent resistance (series) is sum of resistances

$$R_{eq} = \sum R_n = R_1 + R_2 + \ldots + R_N$$

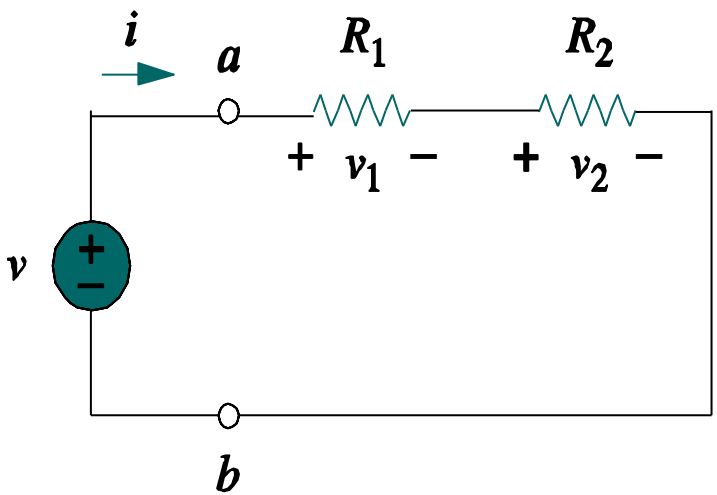

$$R_{eq} = R_1 + R_2$$

$$v_1 = \frac{R_1}{R_1 + R_2} v \qquad v_2 = \frac{R_2}{R_1 + R_2} v$$

Voltage divided over resistors (voltage divider)

$$v_n = \frac{R_n}{R_{eq}} v$$

How could you "measure" R_{eq}?

Resistors in series – relations from KVL, KCL

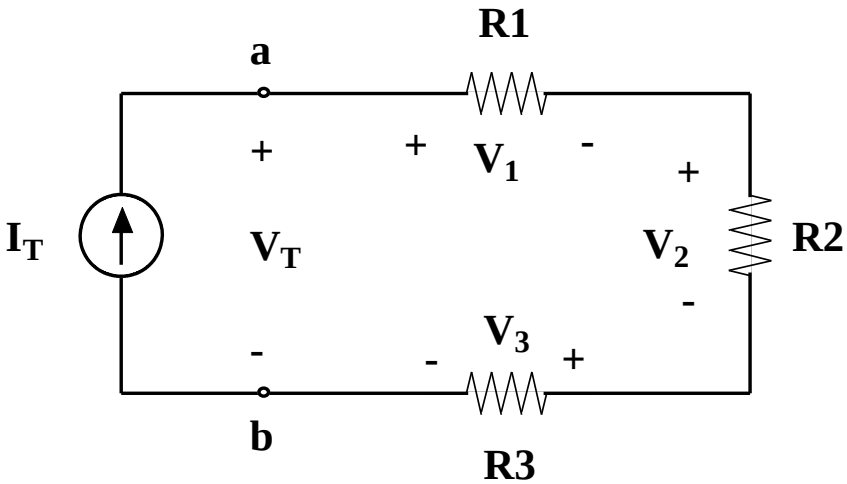

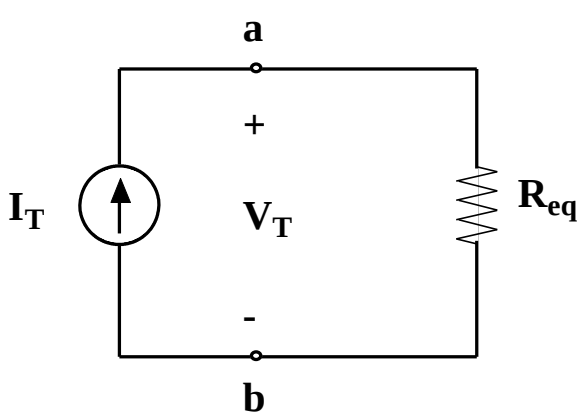

- We want the I-V properties to be the same, so I'll apply at test current and measure a test voltage
- KVL: $V_T=V_1+V_2+V_3$
- KCL&Ohm's Law
  - $V_1=R_1I_T$
  - $V_2=R_2I_T$
  - $V_3=R_3I_T$
- $V_T=(R_1+R_2+R_3)I_T$
- $R_{eq}=V_T/I_T=(R_1+R_2+R_3)$

Resistors in Parallel

R_{eq} (parallel) is inverted sum of resistances

$$\frac{1}{R_{eq}} = \sum \frac{1}{R_n} = \frac{1}{R_1} + \frac{1}{R_2} + \ldots + \frac{1}{R_N}$$

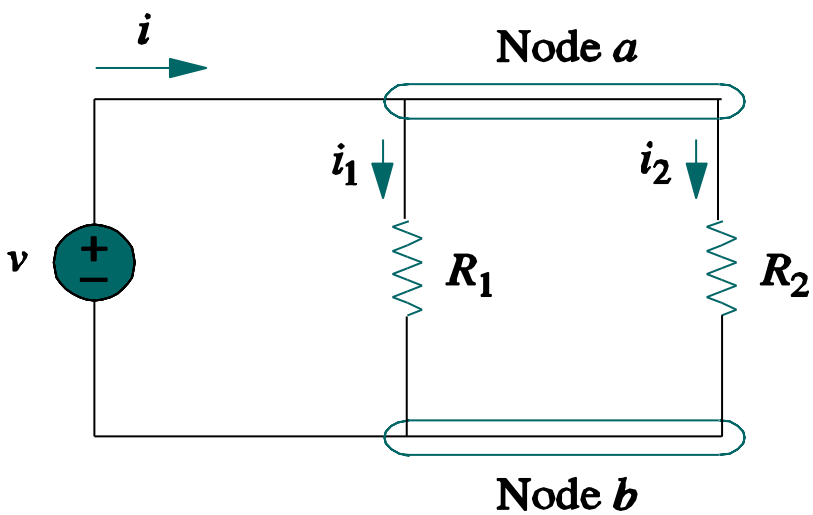

$$R_{eq} = \frac{1}{\frac{1}{R_1} + \frac{1}{R_2}} = \frac{R_1 R_2}{R_1 + R_2}$$

$$i = i_1 + i_2 \qquad i_1 = \frac{v}{R_1} \qquad i_2 = \frac{v}{R_2}$$

Current divided over resistors (current divider)

$$i_n = \frac{v}{R_n} = i\frac{R_{eq}}{R_n}$$

Multi-Step Reduction with Series-Parallel Rules

- Replace the "Ugly" Network with One Equivalent Resistor (A&S Example 2.9)

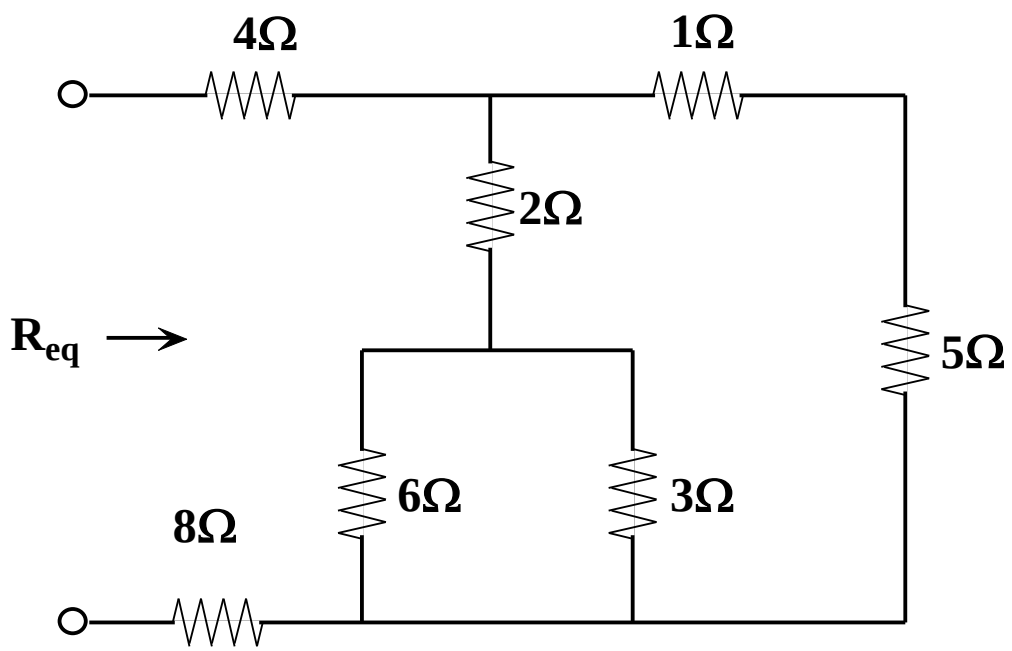

Muti-Step Reduction

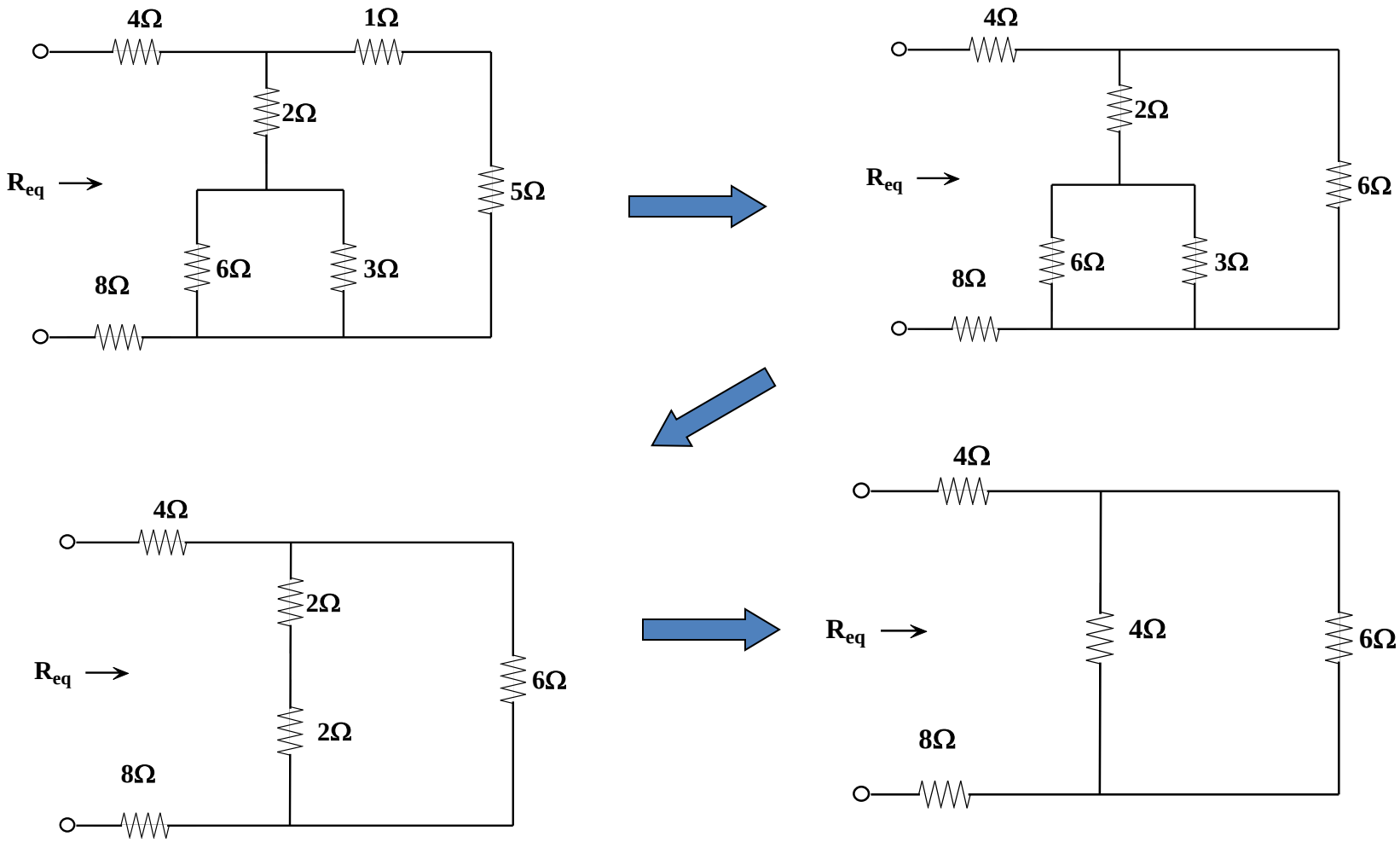

Multi-step Reduction

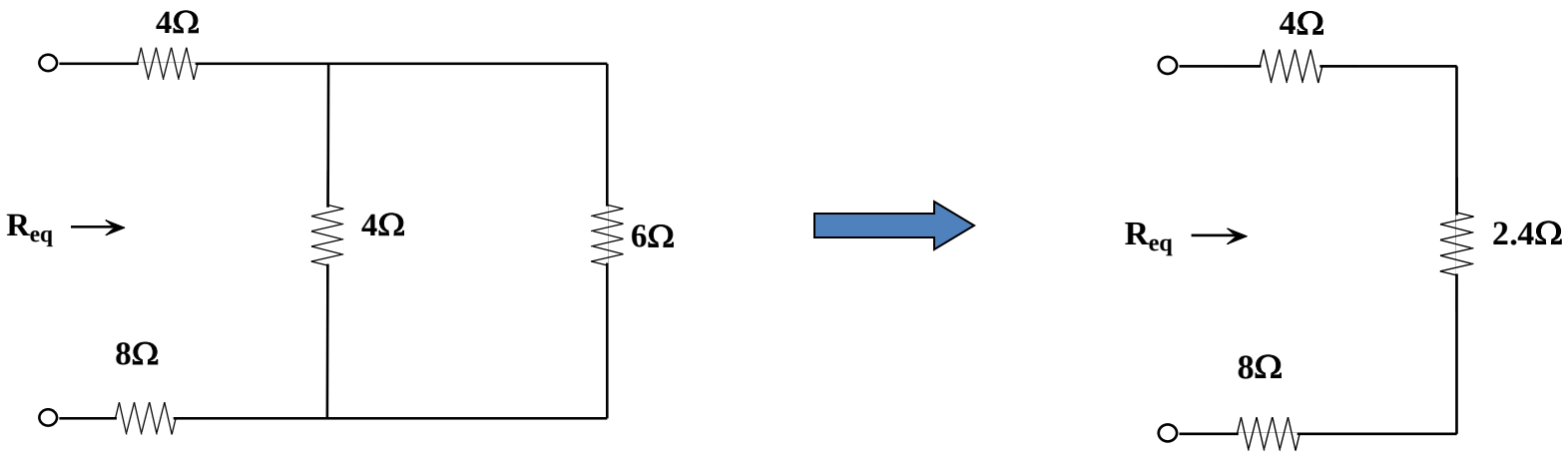

Now it's an easy series combination and

Req=4+2.4+8=14.4Ω

Source Transformation

- Can transform voltage source to current source, representing equivalent circuits
- Can simplify circuit analysis

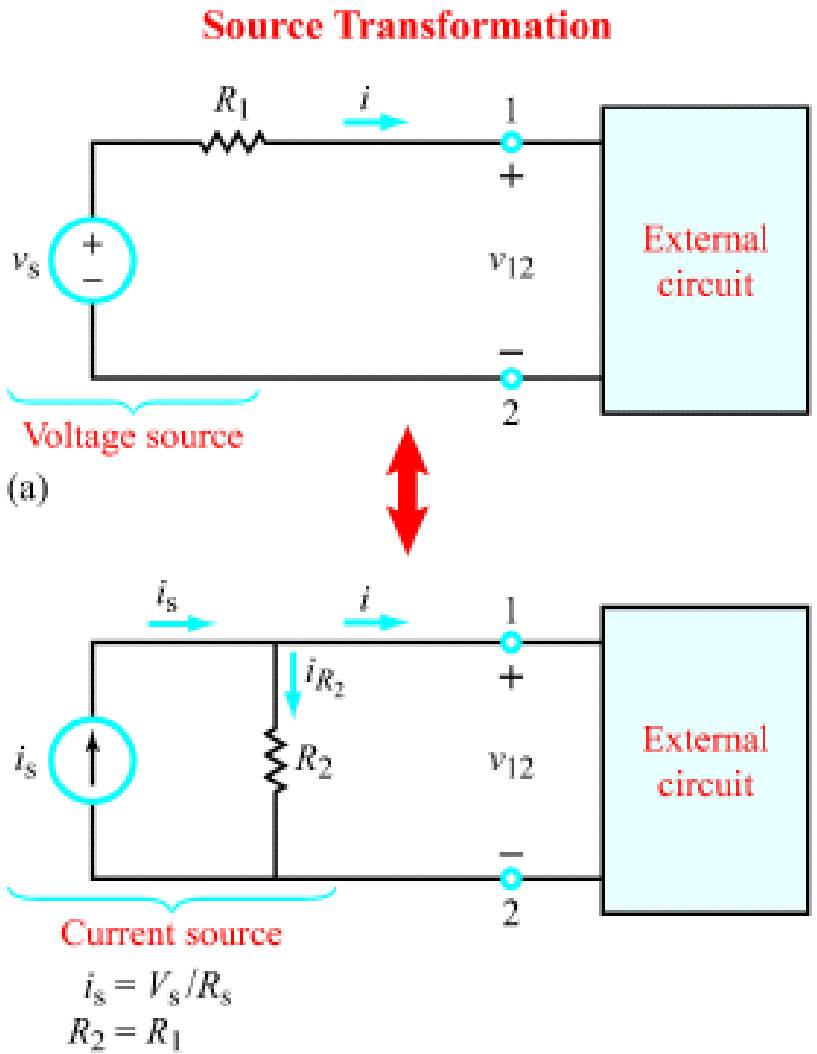

Source Transformations

- Viewed from the output terminals a&b, the two circuits below are *equivalent*
- Replacement of a circuit by an equivalent can make some problems easier to solve

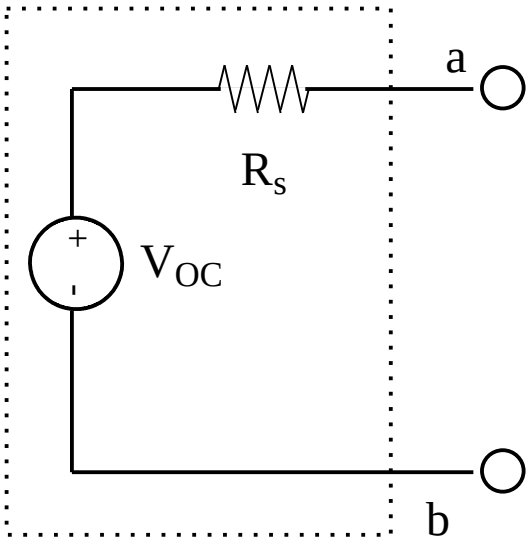

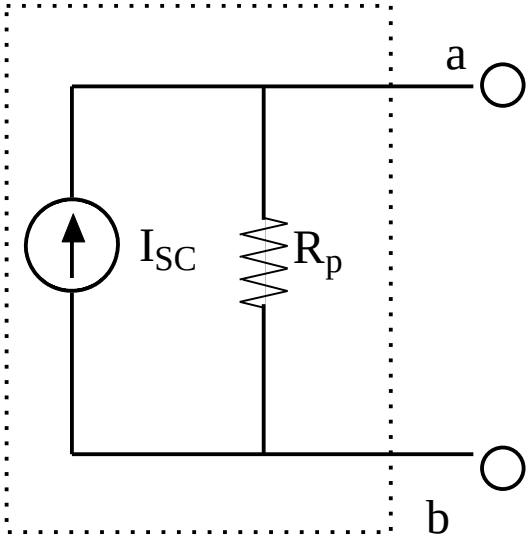

$$R_S = R_P$$

$$V_{OC} = R_P I_{SC}$$

$$I_{SC} = V_{OC} / R_S$$

Practice Problem by Source Transformation

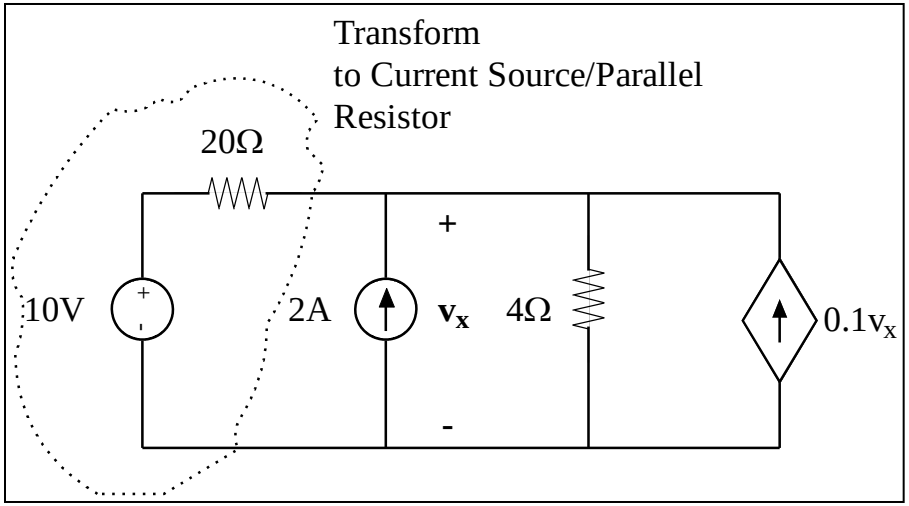

Practice Problem by Source Transformation

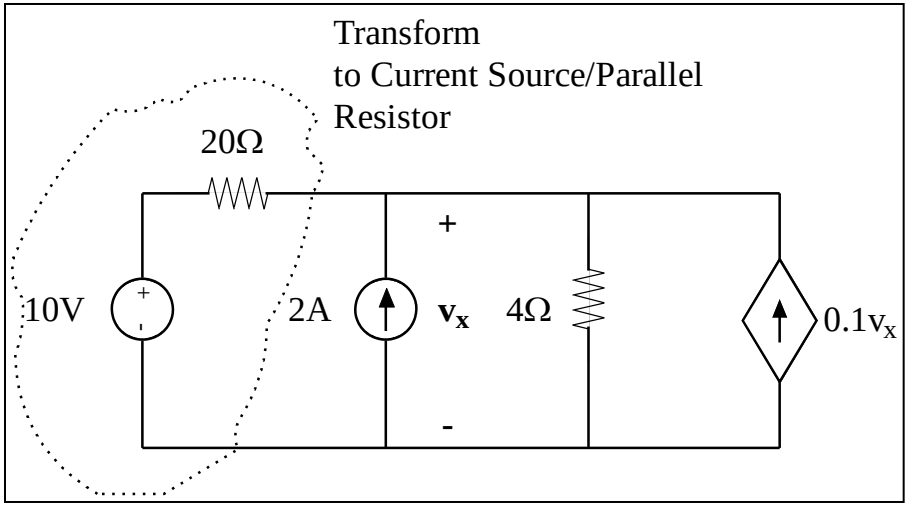

Practice Problem by Source Transformation

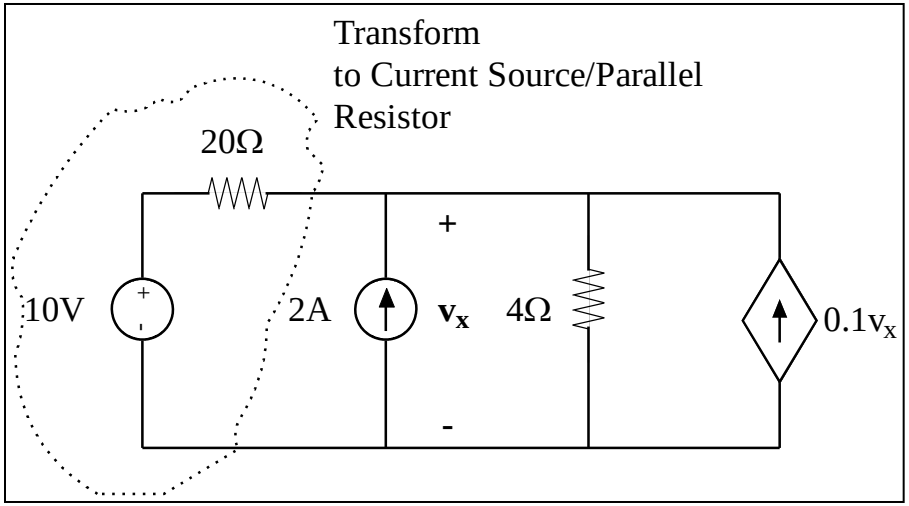

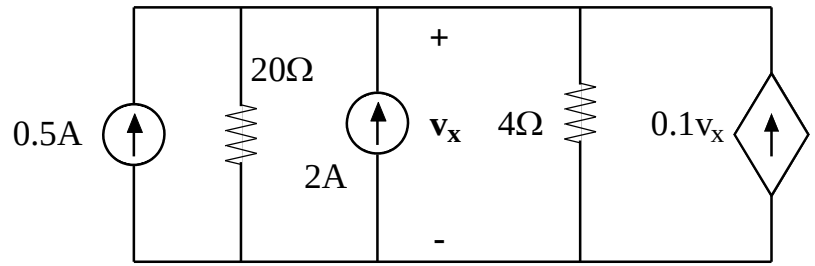

Last trick

$0.1v_x$ source= -10Ω Resistor

Combine Parallel Elements

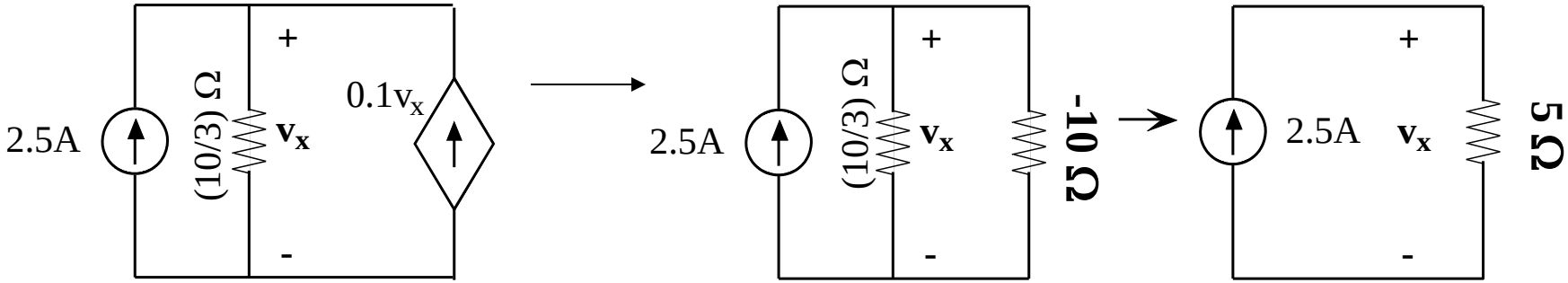

V_x=+12.5V

Wye–Delta (Y–Δ) Transformation

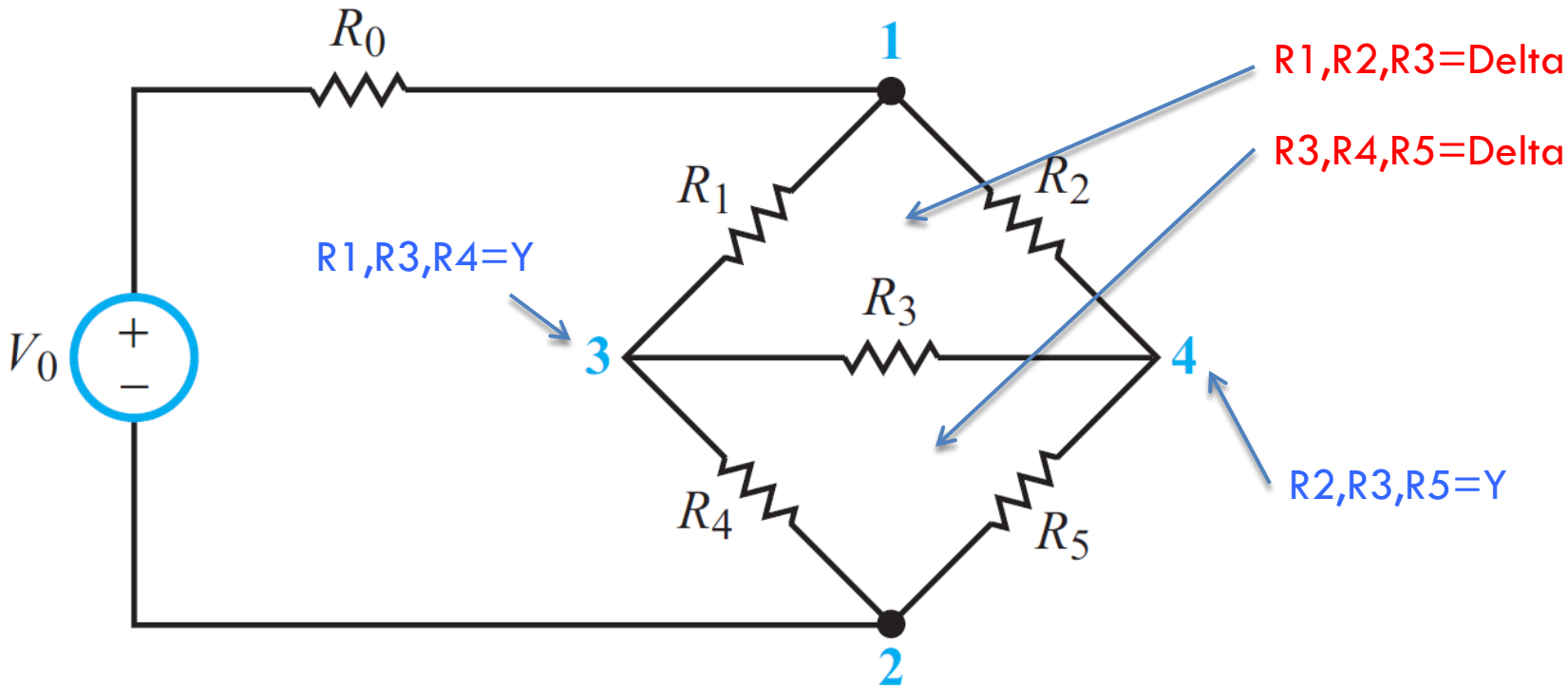

Circuit with no two resistors sharing the same current or same voltage

Wye–Delta (Y–Δ) Transformation

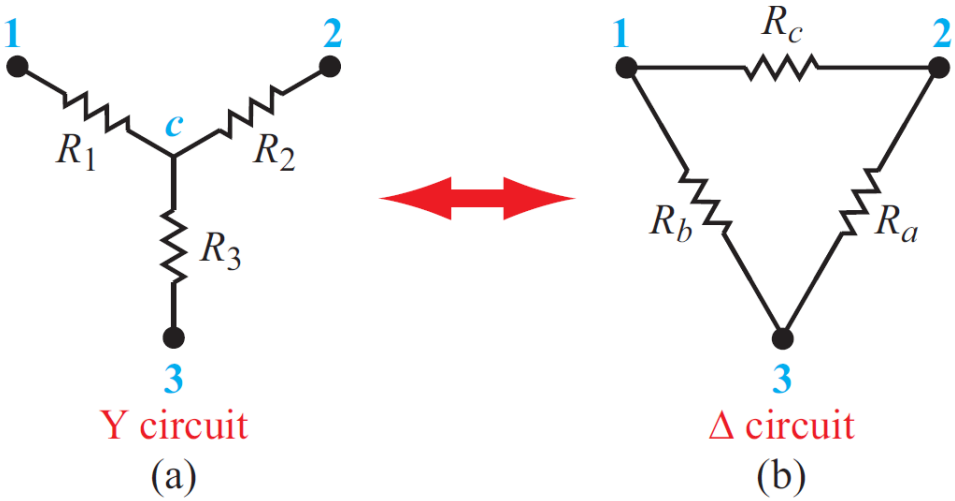

Between nodes 1 and 2:

Wye–Delta (Y–Δ) Transformation

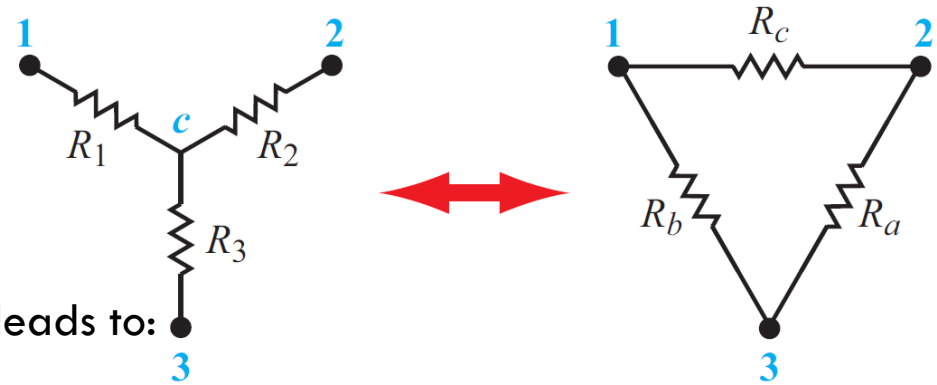

Y circuit (a) Δ circuit (b)

Simultaneous solution leads to:

Δ →Y Transformation

$$R_1 = \frac{R_b R_c}{R_a + R_b + R_c}$$

$$R_2 = \frac{R_a R_c}{R_a + R_b + R_c}$$

$$R_3 = \frac{R_a R_b}{R_a + R_b + R_c}$$

Y→ Δ Transformation

$$R_a = \frac{R_1 R_2 + R_2 R_3 + R_1 R_3}{R_1}$$

$$R_b = \frac{R_1 R_2 + R_2 R_3 + R_1 R_3}{R_2}$$

$$R_c = \frac{R_1 R_2 + R_2 R_3 + R_1 R_3}{R_3}$$

Example 2-9: Y-Δ Circuit

Simplify the circuit in Fig. 2-30(a) by applying the Y–Δ transformation so as to determine the current I.

Solution: Noting the symmetry rules associated with the transformation, the Δ circuit connected to nodes 1, 3, and 4 can be replaced with a Y circuit, as shown in Fig. 2-30(b), with

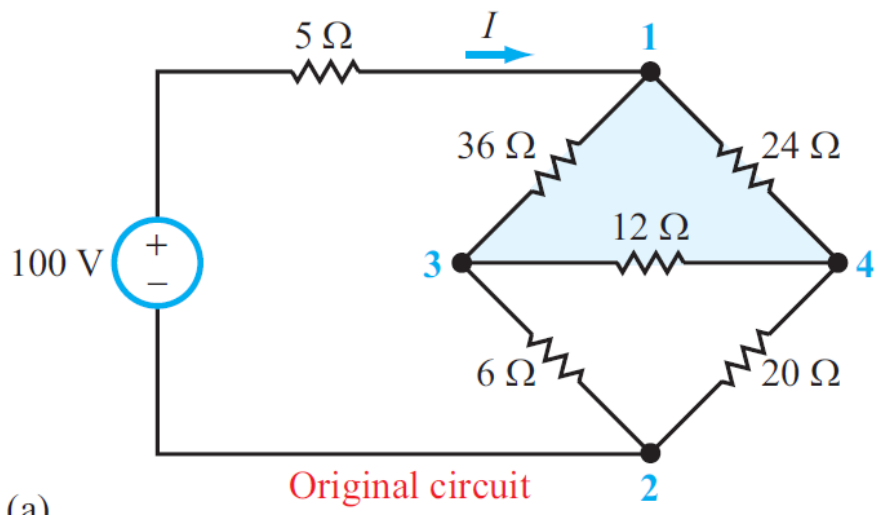

Original circuit

(a)

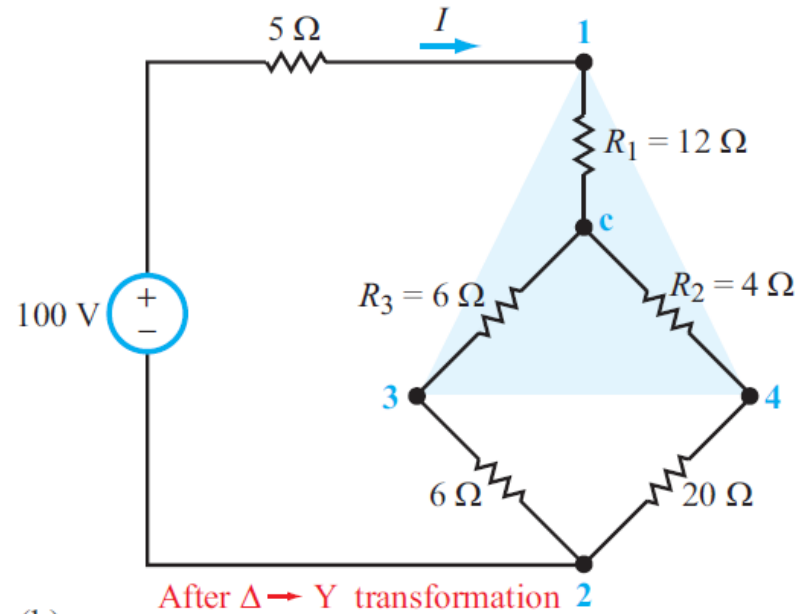

After Δ → Y transformation

(b)

(c)

Wheatstone Bridge

- Measurement instrument based on differential measurement
- Balanced Condition:

$$I_a = 0$$

- Determine unknown resistance based on "balanced" condition

$$V_1 = V_2$$

$$\frac{R_3 V_0}{R_1 + R_3} = \frac{R_x V_0}{R_2 + R_x}$$

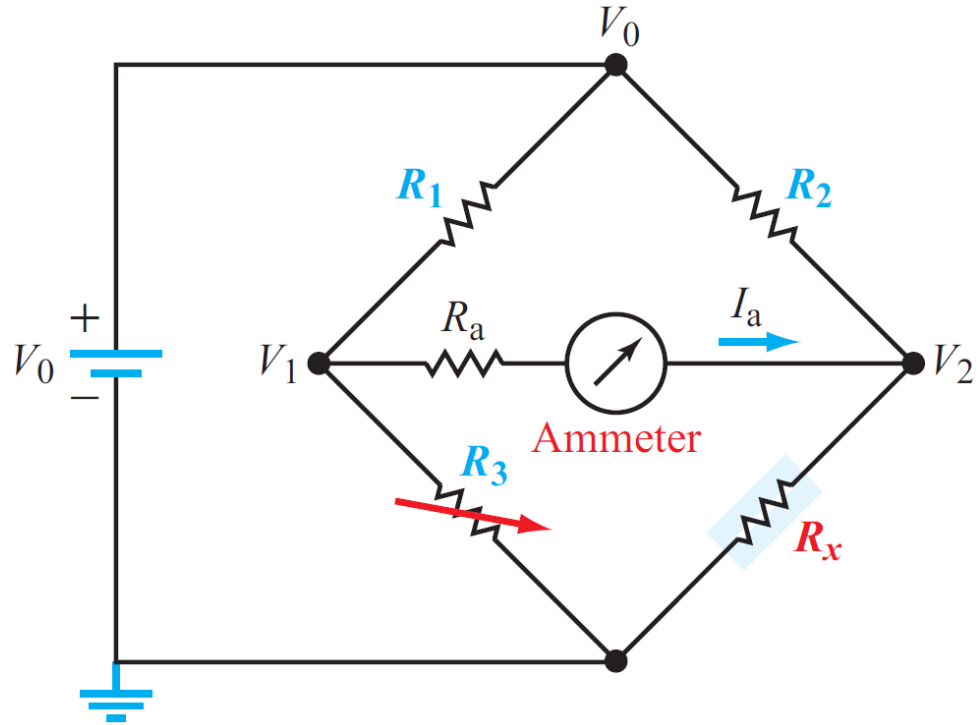

$$R_x = \left(\frac{R_2}{R_1}\right) R_3$$

For balanced condition

Example 2-10: Wheatstone Sensor

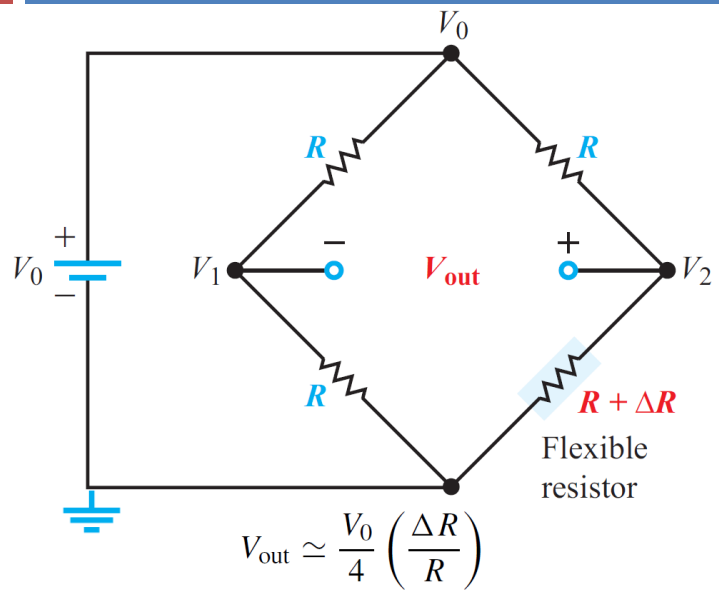

Determine Vout

Example 2-12: Piezoresistor Cantilever

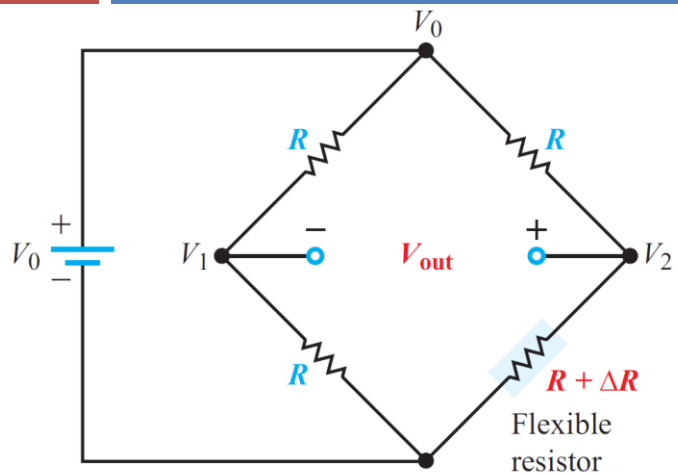

$$V_{out} \simeq \frac{V_0}{4}\left(\frac{\Delta R}{R}\right)$$

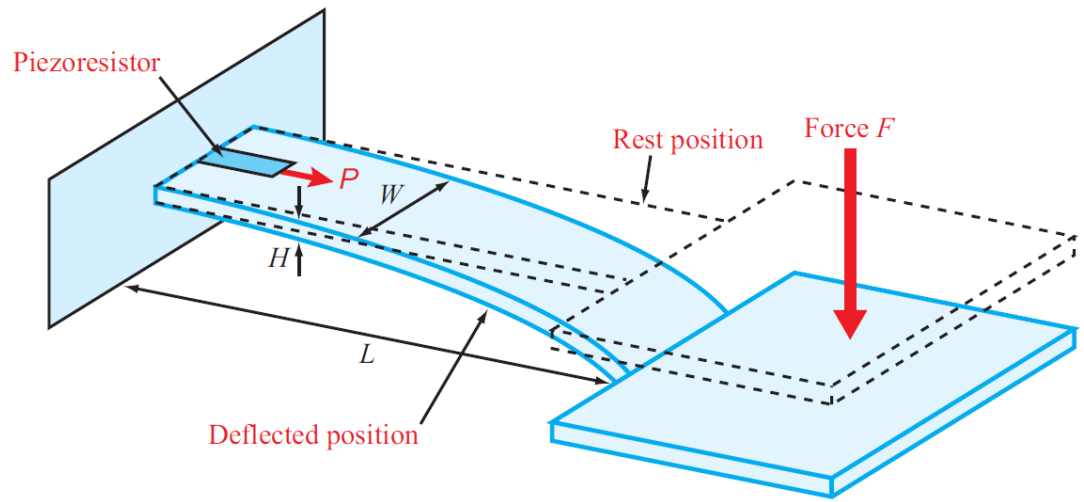

$$\Delta R = R_0 \alpha P,$$

$$V_{out} = \frac{V_0}{4}\left(\frac{\Delta R}{R_0}\right) = \frac{V_0}{4}\alpha P.$$

$$P = \frac{FL}{WH^2}.$$

Determine the output voltage of a Wheatstone-bridge circuit if $F = 50$ N, $V_0 = 1$ V, the piezoresistor is made of silicon, and the cantilever dimensions are $W = 0.5$ cm, $H = 0.5$ mm, and $L = 1$ cm.

Solution: Combining Eqs. (2.67) and (2.68) gives

$$V_{out} = \frac{V_0}{4}\alpha \cdot \frac{FL}{WH^2}$$

$$= \frac{1}{4} \times (-1 \times 10^{-9}) \times \frac{50 \times 10^{-2}}{(5 \times 10^{-3}) \times (5 \times 10^{-4})^2}$$

$$= -0.1 \text{ V}.$$ (400 times greater than w/o cantilever)

i–v Relationships

Linear *i*-*v* relationships

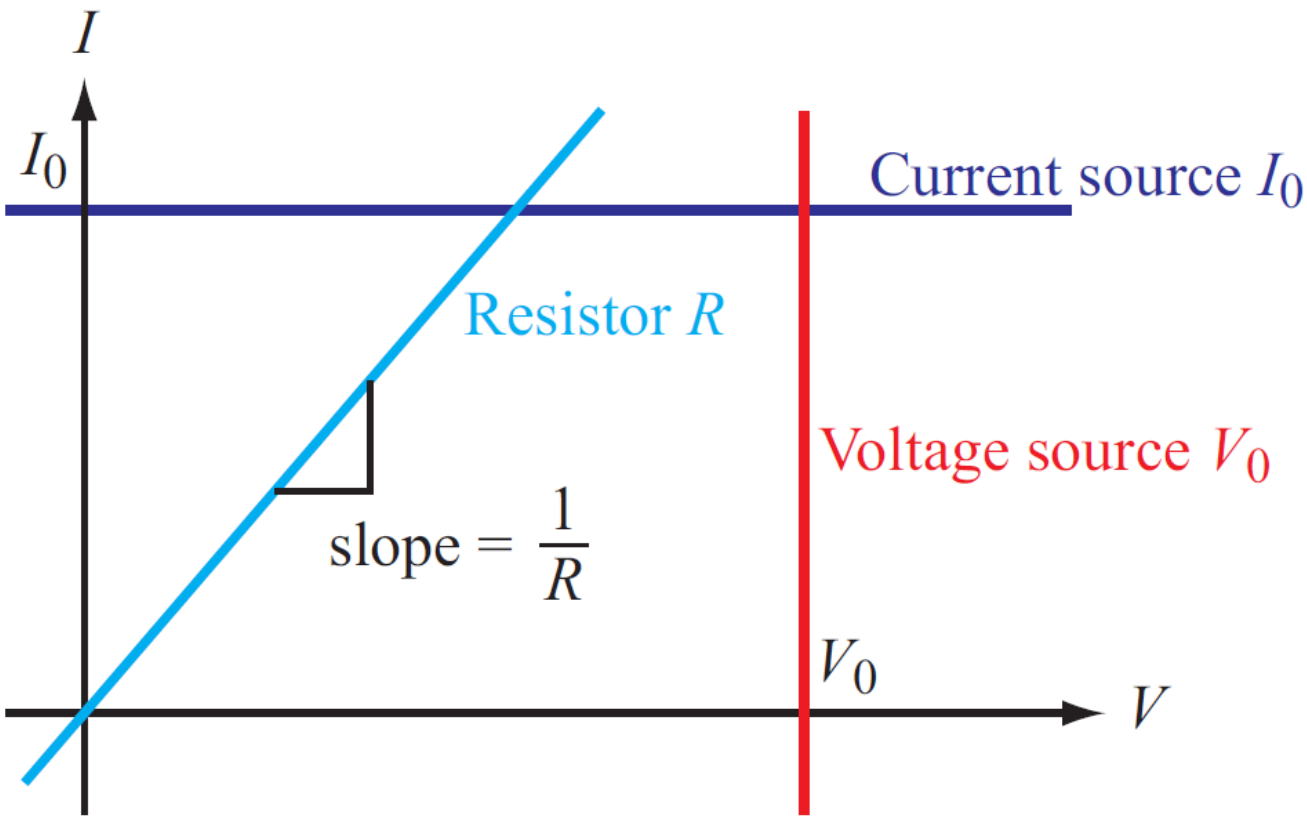

Summary

Chapter 2 Relationships

Linear resistor $R = \rho\ell/A$

$p = i^2 R$

Kirchhoff current law (KCL) $\sum_{n=1}^{N} i_n = 0$

i_n = current entering node n

Kirchhoff voltage law (KVL) $\sum_{n=1}^{N} v_n = 0$

v_n = voltage across branch n

Resistor combinations

In -series $R_{eq} = \sum_{i=1}^{N} R_i$

In parallel $\frac{1}{R_{eq}} = \sum_{i=1}^{N} \frac{1}{R_i}$

or $G_{eq} = \sum_{i=1}^{N} G_i$

Voltage division

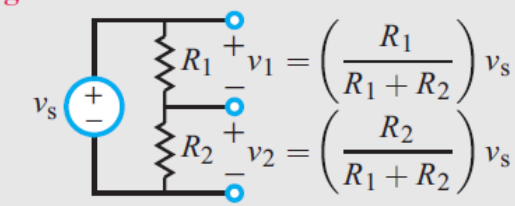

Current division

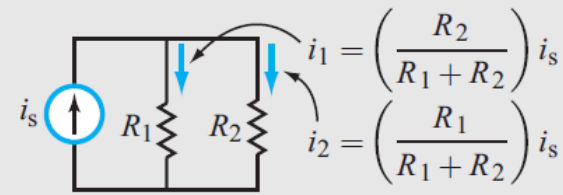

Source transformation

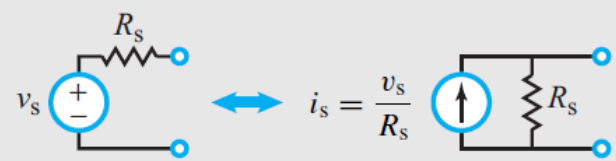

Y–Δ transformation Table 2-6

Wheatstone bridge (Fig. 2-32) $v_{out} \simeq \frac{V_0}{4}\left(\frac{\Delta R}{R}\right)$