ANALYSIS OF SOC AND HIGHER ORDER CIRCUITS USING LAPLACE TRANSFORMS: PART 1

Credit to F. Ulaby

Fred Terry
Fall, 2013

Example General SOC

Find $V_c(t)$ using time domain approach

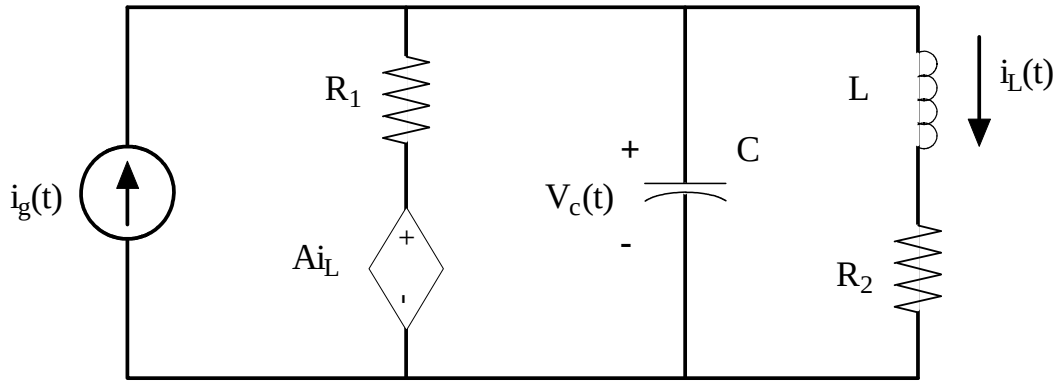

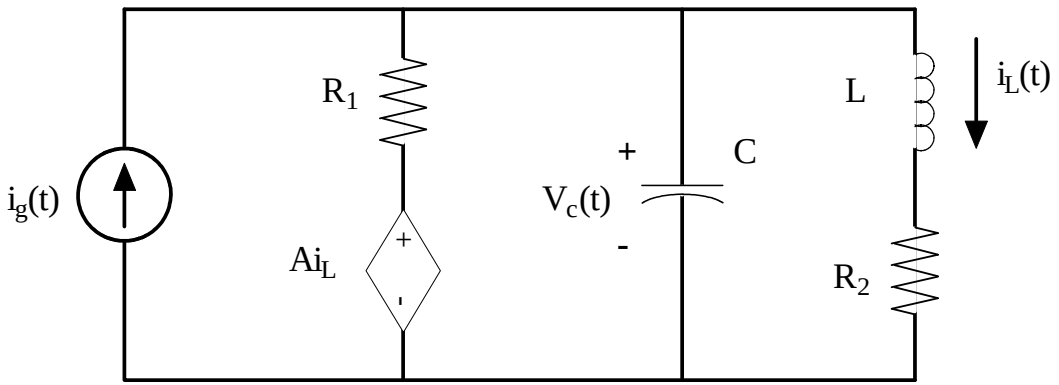
R1
L
iL(t)
+
C
ig(t)
Vc(t)
-
AiL
+
-
R2

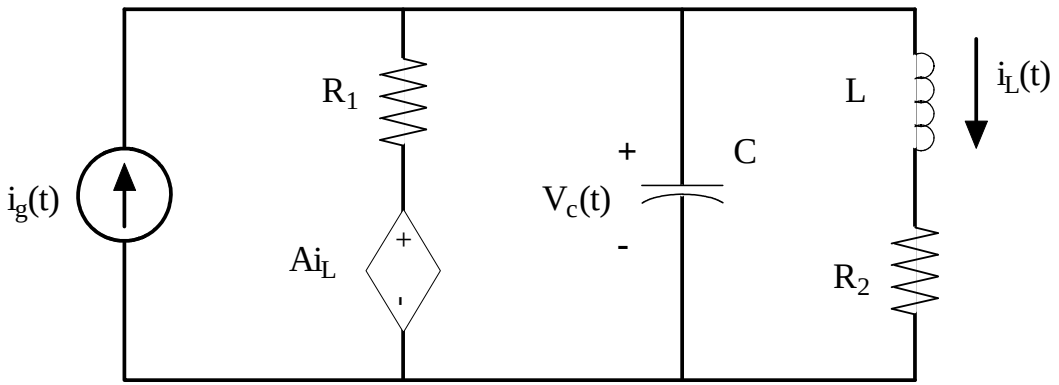
R1
L
iL(t)
+
C
ig(t)
Vc(t)
-
AiL
+
-
R2

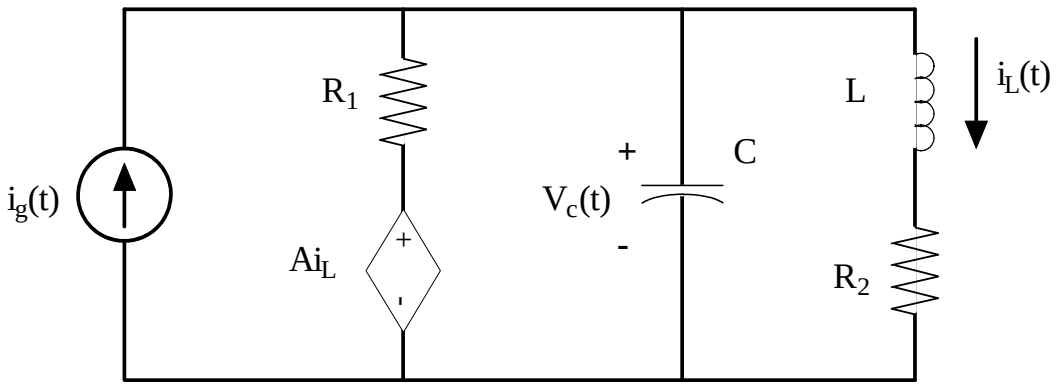
R1
L
iL(t)
+
C
ig(t)
Vc(t)
-
AiL
+
-
R2

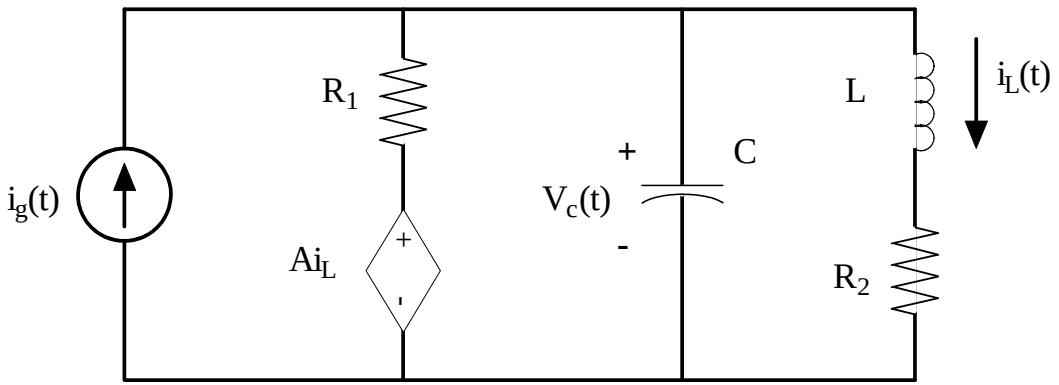
R1
L
iL(t)
+
C
ig(t)
Vc(t)
-
Aii_L
+
-
R2

Why Look at Laplace Transforms?

- Great way to solve ordinary differential equations
- Reduces transient analysis of any linear network (any order linear circuit) to a nodal (or mesh) analysis problem of the transformed circuit
  - Inverse transform gives solution
- Look at
  - Methods for imbedding initial conditions
  - Inverse transforms via the partial fraction expansion
- AC Steady State Response of General Linear Networks Follows as an Easy Special Case

Laplace Circuit Analysis Roadmap

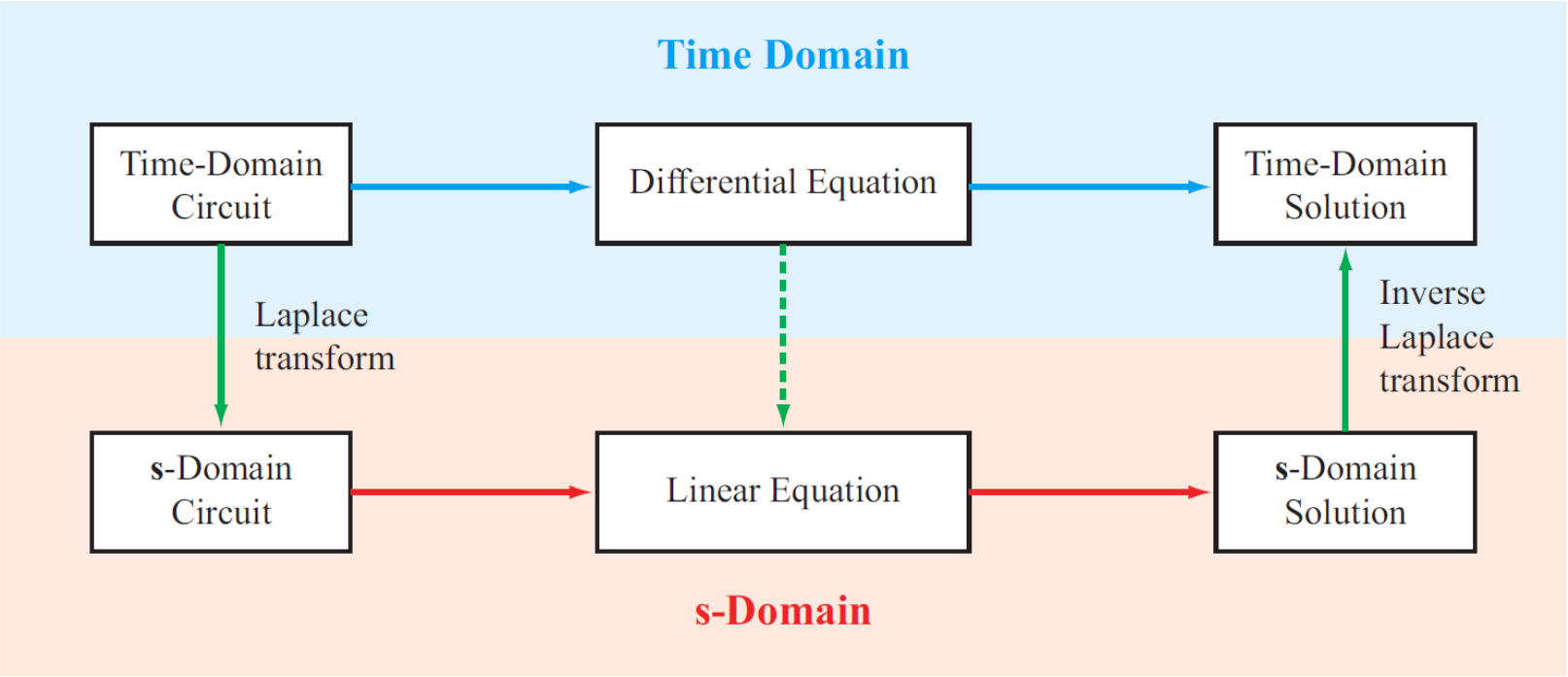

Figure 6-9: The top horizontal sequence involves solving a differential equation in the time domain. The bottom horizontal sequence involves a much easier solution of a linear equation in the **s**-domain.

Solution Procedure from Text

Solution Procedure: Laplace Transform

Step 1: The circuit is transformed to the Laplace domain—also known as the **s**-domain.

Nodal or Mesh Analysis

Step 2: In the **s**-domain, application of KVL and KCL yields a set of algebraic equations.

Step 3: The equations are solved for the variable of interest.

Step 4: The **s**-domain solution is transferred back to the time domain.

Solution Procedure

- Get initial conditions for C's and L's $\{V_c(0), I_L(0)\}$
- Transform circuit into s-domain including initial conditions (either source form)
  - Be certain to transform driving source also!
- Solve s-domain circuit for desired quantities (nodal, mesh)
  - Result is the Laplace transform of desired variables
  - Result for linear circuits will always be a ratio of two polynomials
- Factor polynomials and expand using partial fraction approach
- Take the inverse transform via table lookup

Laplace Transform (1-sided)

The 1-sided Laplace transform is given by:

$$F(s) = L\left[f(t)\right] = \int_{0^-}^{\infty} f(t)e^{-st}dt$$

where $s = \sigma + j\omega$ **and is called the complex frequency.**

A given $f(t)$ **has a unique** $F(s)$ **and vice versa**

$L\left[f(t)\right]$ **converges for all signals of interest in circuit analysis.**

The inverse Laplace transform is given by

$$f(t) = L^{-1}\left[F(s)\right]\frac{1}{2\pi j}\int_{-\infty}^{\infty} F(s)e^{st}ds$$

where $s = \sigma + j\omega$ **and the above integral is taken over** $\omega = -\infty \; to \; \infty$

This is annoying to evaluate, but we will look at a "table lookup" method of doing inverse Laplace transforms that makes this pretty easy.

Example: $f(t) = e^{-\alpha t} u(t)$

$$f(t) = e^{-\alpha t} u(t)$$

$$F(s) = \int_{0^-}^{\infty} f(t) e^{-st} dt = \int_{0^-}^{\infty} e^{-\alpha t} \quad e^{-st} dt = \int_{0^-}^{\infty} \quad e^{-(s+\alpha)t} dt$$

$$F(s) = \left(\frac{1}{s+\alpha} \right) e^{-(s+\alpha)t} \Big|_{t=\infty}^{t=0} = \left(\frac{1}{s+\alpha} \right)$$

Note the special case for a simple unit step

$$f(t) = u(t) = \quad e^{-\alpha t} u(t) \Big|_{\alpha=0}$$

$$F(s) = \left(\frac{1}{s} \right)$$

Laplace Transform of a Derivative

$$L\left[\frac{df}{dt}\right]=\int_{0^-}^{\infty}\left(\frac{df}{dt}\right)e^{-st}\,dt$$

Integrate by Parts:

$$\int_a^b u\,dv = uv\Big|_a^b - \int_a^b v\,du$$

$$u=e^{-st}\rightarrow du=-se^{-st}dt$$

$$dv=\left(\frac{df}{dt}\right)dt\rightarrow v=f(t)$$

$$L\left[\frac{df}{dt}\right]=\int_{0^-}^{\infty}\left(\frac{df}{dt}\right)e^{-st}\,dt=f(t)e^{-st}\Big|_{0^-}^{\infty}-\int_{0^-}^{\infty}f(t)\left(-se^{-st}\right)dt$$

$$L\left[\frac{df}{dt}\right]=-f\left(0^-\right)+s\int_{0^-}^{\infty}f(t)e^{-st}\,dt$$

$$L\left[\frac{df}{dt}\right]=sF(s)-f\left(0^-\right)$$

Applying this idea again yields:

$$L\left[\frac{d^2f}{dt^2}\right]=s^2F(s)-sf\left(0^-\right)-f'\left(0^-\right)$$

and again:

$$L\left[\frac{d^3f}{dt^3}\right]=s^3F(s)-s^2f\left(0^-\right)-sf'\left(0^-\right)-f''\left(0^-\right)$$

etc.

Laplace Transform of an Integral

We can also show via integration by parts that:

$$L\left[\int_0^t f(\tau)\,d\tau\right] = \frac{F(s)}{s}$$

Let's look at how we can transform circuit elements with these relationships

Laplace Transform Properties

Table 6-2: Properties of the Laplace transform.

Property	$f(t)$		$\mathbf{F}(\mathbf{s}) = \mathscr{L}[f(t)]$
1. Multiplication by constant	$K\, f(t)$	$\longleftrightarrow$	$K\, \mathbf{F}(\mathbf{s})$
2. Linearity	$K_1\, f_1(t) + K_2\, f_2(t)$	$\longleftrightarrow$	$K_1\, \mathbf{F}_1(\mathbf{s}) + K_2\, \mathbf{F}_2(\mathbf{s})$
3. Time scaling	$f(at), \quad a > 0$	$\longleftrightarrow$	$\frac{1}{a}\, \mathbf{F}\left(\frac{\mathbf{s}}{a}\right)$
4. Time shift	$f(t-T)\, u(t-T)$	$\longleftrightarrow$	$e^{-T\mathbf{s}}\, \mathbf{F}(\mathbf{s})$
5. Frequency shift	$e^{-at}\, f(t)$	$\longleftrightarrow$	$\mathbf{F}(\mathbf{s}+a)$
6. Time 1st derivative	$f' = \frac{df}{dt}$	$\longleftrightarrow$	$\mathbf{s}\, \mathbf{F}(\mathbf{s}) - f(0^-)$
7. Time 2nd derivative	$f'' = \frac{d^2 f}{dt^2}$	$\longleftrightarrow$	$\mathbf{s}^2 \mathbf{F}(\mathbf{s}) - \mathbf{s} f(0^-) - f'(0^-)$
8. Time integral	$\int_0^t f(t)\, dt$	$\longleftrightarrow$	$\frac{1}{\mathbf{s}}\, \mathbf{F}(\mathbf{s})$

Laplace Transform Pairs 1

	$f(t)$		$\mathbf{F}(\mathbf{s}) = \mathscr{L}[f(t)]$
1	$\delta(t)$	$\leftrightarrow$	1
1a	$\delta(t-T)$	$\leftrightarrow$	$e^{-T\mathbf{s}}$
2	1 or $u(t)$	$\leftrightarrow$	$\frac{1}{\mathbf{s}}$
2a	$u(t-T)$	$\leftrightarrow$	$\frac{e^{-T\mathbf{s}}}{\mathbf{s}}$
3	$e^{-at}\,u(t)$	$\leftrightarrow$	$\frac{1}{\mathbf{s}+a}$
3a	$e^{-a(t-T)}\,u(t-T)$	$\leftrightarrow$	$\frac{e^{-T\mathbf{s}}}{\mathbf{s}+a}$
4	$t\,u(t)$	$\leftrightarrow$	$\frac{1}{\mathbf{s}^2}$
4a	$(t-T)\,u(t-T)$	$\leftrightarrow$	$\frac{e^{-T\mathbf{s}}}{\mathbf{s}^2}$
5	$t^2\,u(t)$	$\leftrightarrow$	$\frac{2}{\mathbf{s}^3}$
6	$te^{-at}\,u(t)$	$\leftrightarrow$	$\frac{1}{(\mathbf{s}+a)^2}$
7	$t^2e^{-at}\,u(t)$	$\leftrightarrow$	$\frac{2}{(\mathbf{s}+a)^3}$
8	$t^{n-1}e^{-at}\,u(t)$	$\leftrightarrow$	$\frac{(n-1)!}{(\mathbf{s}+a)^n}$

Laplace Transform Pairs 2

9	$\sin \omega t \, u(t)$	$\leftrightarrow$	$\dfrac{\omega}{\mathbf{s}^2 + \omega^2}$
10	$\sin(\omega t + \theta) \, u(t)$	$\leftrightarrow$	$\dfrac{\mathbf{s} \sin\theta + \omega \cos\theta}{\mathbf{s}^2 + \omega^2}$
11	$\cos \omega t \, u(t)$	$\leftrightarrow$	$\dfrac{\mathbf{s}}{\mathbf{s}^2 + \omega^2}$
12	$\cos(\omega t + \theta) \, u(t)$	$\leftrightarrow$	$\dfrac{\mathbf{s} \cos\theta - \omega \sin\theta}{\mathbf{s}^2 + \omega^2}$
13	$e^{-at} \sin \omega t \, u(t)$	$\leftrightarrow$	$\dfrac{\omega}{(\mathbf{s}+a)^2 + \omega^2}$
14	$e^{-at} \cos \omega t \, u(t)$	$\leftrightarrow$	$\dfrac{\mathbf{s}+a}{(\mathbf{s}+a)^2 + \omega^2}$
15	$2e^{-at} \cos(bt - \theta) \, u(t)$	$\leftrightarrow$	$\dfrac{e^{j\theta}}{\mathbf{s}+a+jb} + \dfrac{e^{-j\theta}}{\mathbf{s}+a-jb}$
16	$\dfrac{2t^{n-1}}{(n-1)!} e^{-at} \cos(bt - \theta) \, u(t)$	$\leftrightarrow$	$\dfrac{e^{j\theta}}{(\mathbf{s}+a+jb)^n} + \dfrac{e^{-j\theta}}{(\mathbf{s}+a-jb)^n}$

Resistors

Time-Domain	s-Domain
Resistor 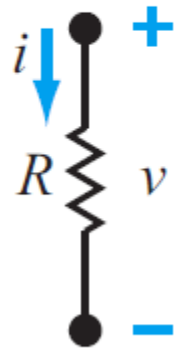 $v = Ri$	$\mathbf{V} = R\mathbf{I}$

Capacitors

Capacitor

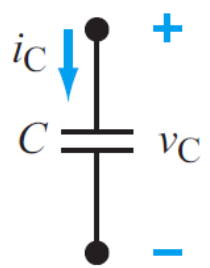

$$i_C = C\frac{dv_C}{dt}$$

$$v_C = \frac{1}{C}\int_{0^-}^{t} i_C\,dt + v_C(0^-)$$

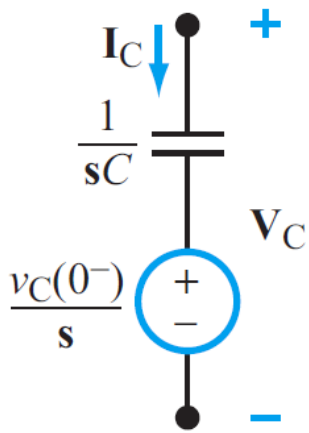

$$\mathbf{V}_C = \frac{\mathbf{I}_C}{\mathbf{s}C} + \frac{v_C(0^-)}{\mathbf{s}}$$

OR

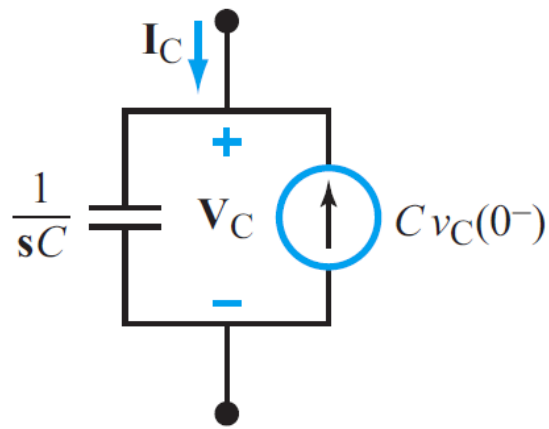

$$\mathbf{I}_C = \mathbf{s}C\mathbf{V}_C - C\,v_C(0^-)$$

Inductors

Inductor

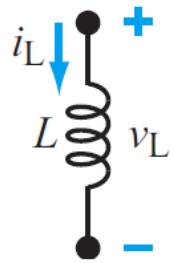

$$v_L = L\frac{di_L}{dt}$$

$$i_L = \frac{1}{L}\int_{0^-}^{t} v_L\,dt + i_L(0^-)$$

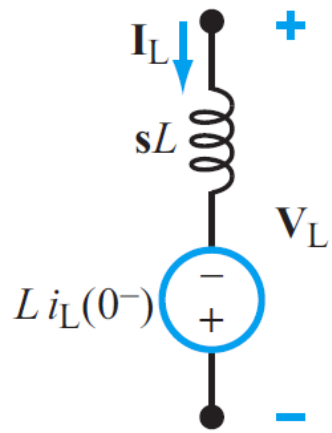

OR

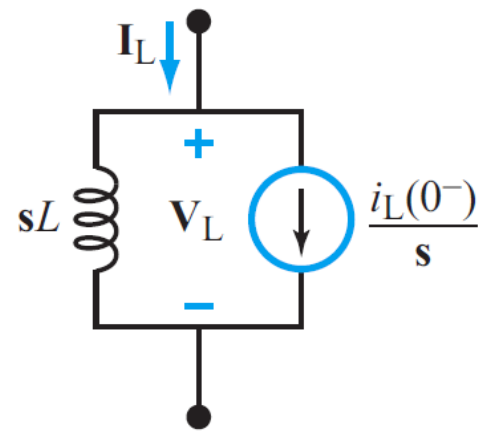

$$\mathbf{V}_L = \mathbf{s}L\mathbf{I}_L - L\,i_L(0^-)$$

$$\mathbf{I}_L = \frac{\mathbf{V}_L}{\mathbf{s}L} + \frac{i_L(0^-)}{\mathbf{s}}$$

General Result

$$F(s) = A_1 \frac{N(s)}{D(s)}$$

$$N(s) = \left(a_m s^m + a_{m-1} s^{m-1} + \cdots a_0\right)$$

$$D(s) = \left(b_n s^n + b_{n-1} s^{n-1} + \cdots b_0\right)$$

$$F(s) = A_2 \frac{(s-z_1)(s-z_2)\cdots(s-z_m)}{(s-p_1)(s-p_2)\cdots(s-p_n)}$$

z_i are called zeroes of $F(s)$

p_j are called poles of $F(s)$

If $m < n$ then partial fraction expansion:

$$F(s) = \frac{K_1}{(s-p_1)} + \frac{K_2}{(s-p_2)} + \ldots \frac{K_n}{(s-p_n)}$$

Special cases of double poles and complex poles

if $m \geq n$ reduce to Quotient & Remainder

and expand Remainder as partial fraction

(see Ulaby New 6.8)

special case of double poles:

$$F(s) = A\frac{(s-z_1)}{(s-p_1)^2} = \frac{K_1}{(s-p_1)} + \frac{K_2}{(s-p_1)^2}$$

complex poles (assume below $\alpha < \omega_0$)

$$F(s) = A\frac{(s-z_1)}{\left(s^2 + 2\alpha s + \omega_0^2\right)}$$

$$F(s) = A\frac{(s-z_1)}{(s+\alpha+j\omega_d)(s+\alpha-j\omega_d)}$$

$$F(s) = \frac{K_1}{(s+\alpha+j\omega_d)} + \frac{K_1^*}{(s+\alpha+j\omega_d)}$$

Laplace Transform Circuit Analysis Example

Transform circuit

In this example I will get $V_c(s)$ by doing s-domain nodal analysis and then transform back to get $V_c(t)$

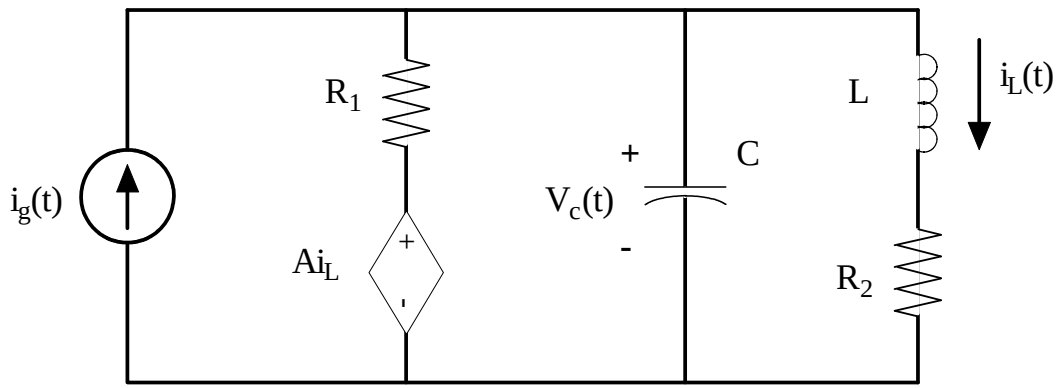

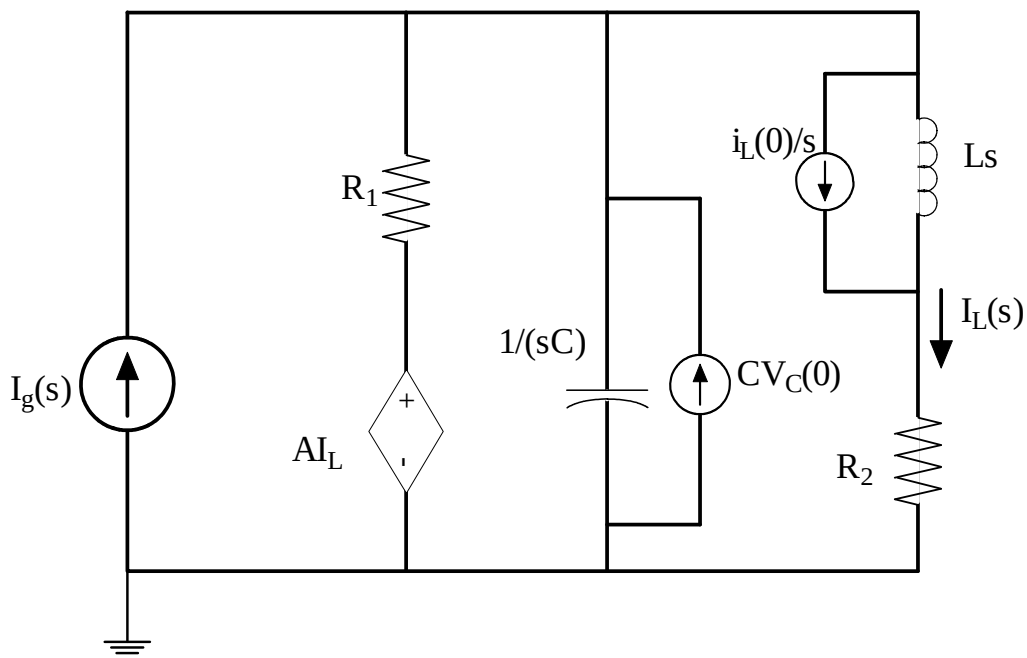

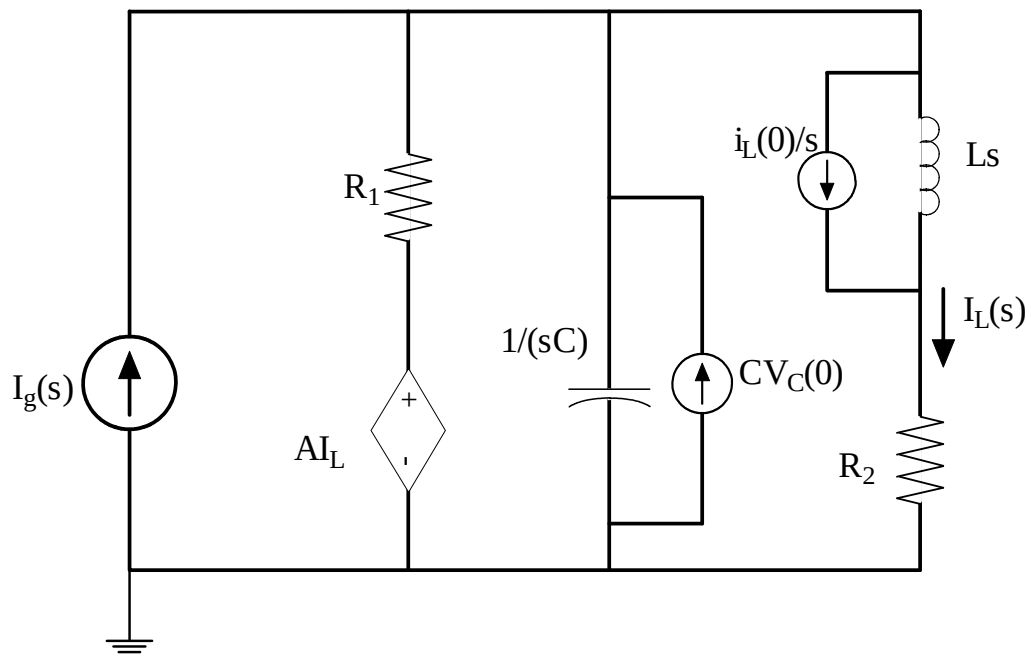
R_1
$i_L(0)/s$
Ls
$I_L(s)$
1/(sC)
$CV_C(0)$
$I_g(s)$
+
-
AI_L
R_2

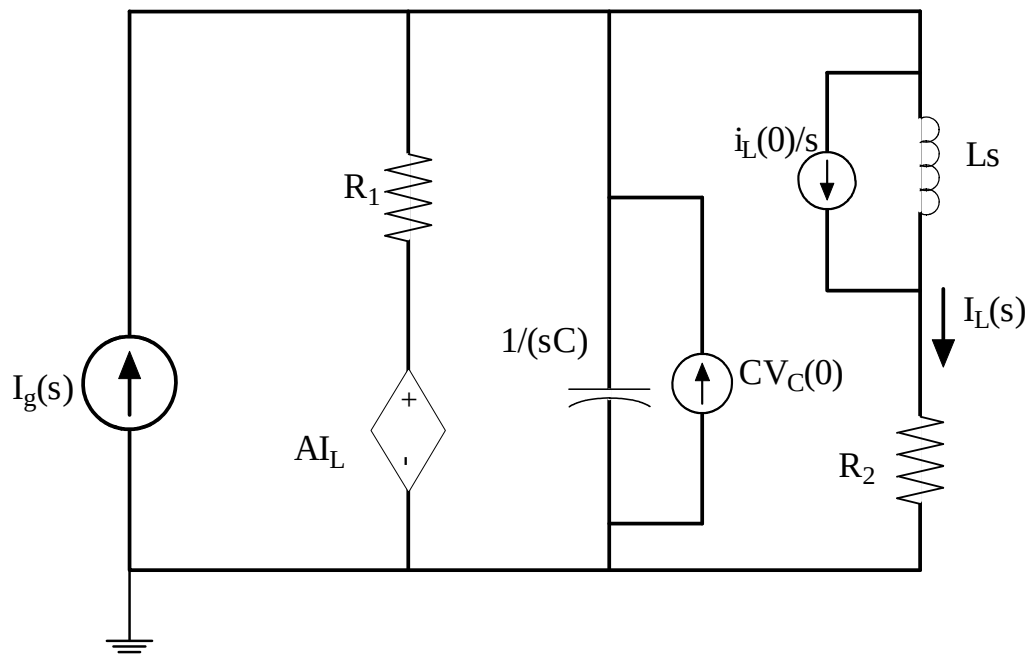
R_1
$i_L(0)/s$
Ls
$I_L(s)$
1/(sC)
$CV_C(0)$
$I_g(s)$
+
AI_L
R_2

General Solution Using Mathematica

$$V_c(s) = \left\{ \frac{(R_1R_2 + LR_1s)\left[I_G(s)\right] + (A - R_1)Li_L(0) + C_1(R_1R_2 + LR_1s)v_C(0)}{(R_1 + R_2 - A) + (L + C_1R_1R_2)s + C_1LR_1s^2} \right\}$$

$$= \left\{ \begin{array}{l} \left[\dfrac{R_1R_2 + LR_1s}{(R_1 + R_2 - A) + (L + C_1R_1R_2)s + C_1LR_1s^2} \right]\left[I_G(s)\right] + \\ \left[\dfrac{(A - R_1)L}{(R_1 + R_2 - A) + (L + C_1R_1R_2)s + C_1LR_1s^2} \right] i_L(0) + \\ \left[\dfrac{C_1(R_1R_2 + LR_1s)}{(R_1 + R_2 - A) + (L + C_1R_1R_2)s + C_1LR_1s^2} \right] v_C(0) \end{array} \right\}$$

Mathematica Solution for $i_g(t)=I_{G0}u(t)$


```
In[2]:= Clear[R1, R2, A, L, C1, IL0, VC0, IG0, V2]
```

```
In[3]:= e1 = -IG0 / s + (VC - A * IL) / R1 + s * C1 * VC - C1 * VC0 + (VC - V2) / (L * s) + IL0 / s
```

Out[3]= $$-\frac{IG0}{s}+\frac{IL0}{s}+C1\ s\ VC+\frac{-A\ IL+VC}{R1}+\frac{-V2+VC}{L\ s}-C1\ VC0$$

```
In[4]:= e2 = (V2 - VC) / (L * s) - IL0 / s + V2 / R2
```

Out[4]= $$-\frac{IL0}{s}+\frac{V2}{R2}+\frac{V2-VC}{L\ s}$$

```
In[5]:= IL = V2 / R2
```

Out[5]= $$\frac{V2}{R2}$$

```
In[6]:= e2
```

Out[6]= $$-\frac{IL0}{s}+\frac{V2}{R2}+\frac{V2-VC}{L\ s}$$

```
In[7]:= Solve[{e1 == 0, e2 == 0}, {VC, V2}]
```

Out[7]= $$\left\{\left\{VC\to-\frac{-IG0\ R1\ R2-A\ IL0\ L\ s-IG0\ L\ R1\ s+IL0\ L\ R1\ s-C1\ R1\ R2\ s\ VC0-C1\ L\ R1\ s^2\ VC0}{s\left(-A+R1+R2+L\ s+C1\ R1\ R2\ s+C1\ L\ R1\ s^2\right)},\right.\right.$$
$$\left.\left.V2\to\frac{R2\left(IG0\ R1+IL0\ L\ s+C1\ IL0\ L\ R1\ s^2+C1\ R1\ s\ VC0\right)}{s\left(-A+R1+R2+L\ s+C1\ R1\ R2\ s+C1\ L\ R1\ s^2\right)}\right\}\right\}$$

Example Numerical Solution

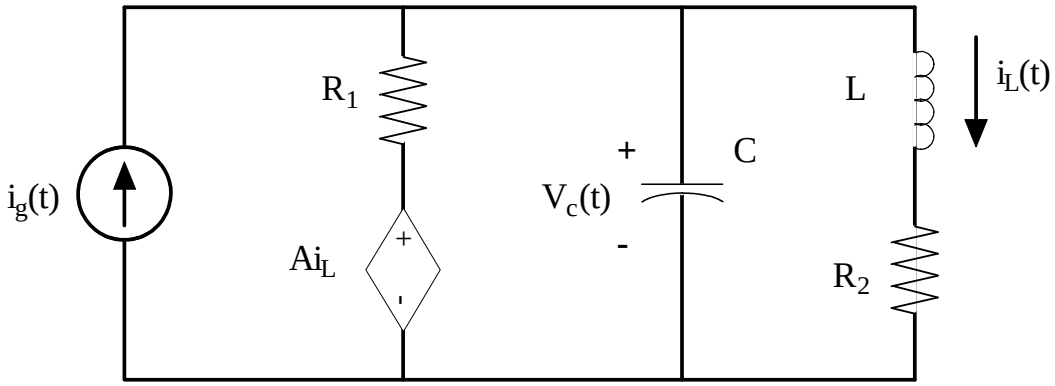

$$i_g = 90u(t)\ mA \quad R_1 = 1K\Omega \quad R_2 = 5\Omega$$

$$C = 1\mu F \quad L = 1mH \quad A = 996\Omega$$

```
In[8]:= A = 996
        R1 = 1*^3
        R2 = 5
        C1 = 1*^-6
        L = 1*^-3
        VC0 = 5
        IL0 = 1
        IG0 = 90*^-3
```

Out[8]= 996

Out[9]= 1000

Out[10]= 5

Out[11]= $\frac{1}{1\,000\,000}$

Out[12]= $\frac{1}{1000}$

Out[13]= 5

Out[14]= 1

Out[15]= $\frac{9}{100}$

Mathematica Execution

In[16]:= `VC1 = -(-IG0 R1 R2 - A IL0 L s - IG0 L R1 s + IL0 L R1 s - C1 R1 R2 s VC0 - C1 L R1 s^2 VC0) / (s (-A + R1 + R2 + L s + C1 R1 R2 s + C1 L R1 s^2))`

Out[16]= $$-\frac{-450-\frac{111\,s}{1000}-\frac{s^2}{200\,000}}{s\left(9+\frac{3\,s}{500}+\frac{s^2}{1\,000\,000}\right)}$$

In[17]:= `Factor[VC1]`

Out[17]= $$\frac{5\left(90\,000\,000+22\,200\,s+s^2\right)}{s\,(3000+s)^2}$$

In[18]:= `Apart[VC1]`

Out[18]= $$\frac{50}{s}-\frac{54\,000}{(3000+s)^2}-\frac{45}{3000+s}$$

In[19]:= `vcreal = InverseLaplaceTransform[VC1, s, t]`

Out[19]= $$50-45\,e^{-3000\,t}-54\,000\,e^{-3000\,t}\,t$$

Mathematica Execution

In[20]:= $$IL1 = \frac{R2\left(IG0\ R1 + IL0\ L\ s + C1\ IL0\ L\ R1\ s^2 + C1\ R1\ s\ VC0\right)}{s\left(-A + R1 + R2 + L\ s + C1\ R1\ R2\ s + C1\ L\ R1\ s^2\right)} \Big/ R2$$

Out[20]= $$\frac{90 + \frac{3\,s}{500} + \frac{s^2}{1\,000\,000}}{s\left(9 + \frac{3\,s}{500} + \frac{s^2}{1\,000\,000}\right)}$$

In[21]:= `Factor[IL1]`

Out[21]= $$\frac{90\,000\,000 + 6000\,s + s^2}{s\,(3000 + s)^2}$$

In[22]:= `Apart[IL1]`

Out[22]= $$\frac{10}{s} - \frac{27\,000}{(3000 + s)^2} - \frac{9}{3000 + s}$$

In[23]:= `ilreal = InverseLaplaceTransform[IL1, s, t]`

Out[23]= $$10 - 9\,e^{-3000\,t} - 27\,000\,e^{-3000\,t}\,t$$

Node Analysis Result: Laplace Transform

$$V_c(s) = \frac{5(90000000 + 22200s + s^2)}{s(3000+s)^2} = \frac{50}{s} - \frac{54000}{(3000+s)^2} - \frac{45}{3000+s}$$

$$I_L(s) = \frac{90000000 + 6000s + s^2}{s(3000+s)^2} = \frac{10}{s} - \frac{27000}{(3000+s)^2} - \frac{9}{3000+s}$$

Answer from Inverse Laplace Transform

$$v_c(t) = 50 - 45e^{-3000t} - (54000)te^{-3000t} \quad Volts$$

$$i_L(t) = 10 - 9e^{-3000t} - (27000)te^{-3000t} \quad Amps$$

In[1]:= **k2 = (Vc - V2) / L / s + IL0 / s - V2 / R2**

Out[1]= $$\frac{IL0}{s} - \frac{V2}{R2} + \frac{-V2 + Vc}{L\,s}$$

In[2]:= **Solve[k2 == 0, V2]**

Out[2]= $$\left\{\left\{V2 \to \frac{R2\,(IL0\,L + Vc)}{R2 + L\,s}\right\}\right\}$$

In[3]:= $$\mathbf{IL = \frac{R2\,(IL0\,L + Vc)}{R2 + L\,s} * 1 / R2}$$

Out[3]= $$\frac{IL0\,L + Vc}{R2 + L\,s}$$

In[4]:= **k1 = -Ig0 / s + (Vc - A * IL) / R1 + s * C1 * Vc - C1 * VC0 + IL**

Out[4]= $$-\frac{Ig0}{s} + C1\,s\,Vc + \frac{IL0\,L + Vc}{R2 + L\,s} + \frac{Vc - \frac{A\,(IL0\,L + Vc)}{R2 + L\,s}}{R1} - C1\,VC0$$

In[5]:= **Solve[k1 == 0, Vc]**

Out[5]= $$\{\{Vc \to (Ig0\,R1\,R2 + A\,IL0\,L\,s + Ig0\,L\,R1\,s - IL0\,L\,R1\,s + C1\,R1\,R2\,s\,VC0 + C1\,L\,R1\,s^2\,VC0) / (s\,(-A + R1 + R2 + L\,s + C1\,R1\,R2\,s + C1\,L\,R1\,s^2))\}\}$$

In[1]:= **v1 =**

$$\left(\mathbf{Ig0\ R1\ R2 + A\ IL0\ L\ s + Ig0\ L\ R1\ s - IL0\ L\ R1\ s + C1\ R1\ R2\ s\ VC0 + C1\ L\ R1\ s^2\ VC0}\right) / \left(\mathbf{s\ (-A + R1 + R2 + L\ s + C1\ R1\ R2\ s + C1\ L\ R1\ s^2)}\right)$$

Out[1]= $(Ig0\ R1\ R2 + A\ IL0\ L\ s + Ig0\ L\ R1\ s - IL0\ L\ R1\ s + C1\ R1\ R2\ s\ VC0 + C1\ L\ R1\ s^2\ VC0) / (s\ (-A + R1 + R2 + L\ s + C1\ R1\ R2\ s + C1\ L\ R1\ s^2))$

In[2]:= **C1 = 10^-6**

Out[2]= $\frac{1}{1000000}$

In[3]:= **L = 10^-3**

Out[3]= $\frac{1}{1000}$

In[4]:= **R1 = 1000**

Out[4]= 1000

In[5]:= **R2 = 5**

Out[5]= 5

In[6]:= **A = 996**

Out[6]= 996

In[7]:= **IL0 = 1**

Out[7]= 1

In[8]:= **VC0 = 5**

Out[8]= 5

In[9]:= **Ig0 = 90 * 10^-3**

Out[9]= $\frac{9}{100}$

In[10]:= **v1**

Out[10]= $$\frac{450 + \frac{111\,s}{1000} + \frac{s^2}{200000}}{s\left(9 + \frac{3\,s}{500} + \frac{s^2}{1000000}\right)}$$

In[12]:= **Factor[v1]**

Out[12]= $$\frac{5\,(90000000 + 22200\,s + s^2)}{s\,(3000 + s)^2}$$

In[18]:= **v1pf = Apart[v1]**

Out[18]= $$\frac{50}{s} - \frac{54000}{(3000 + s)^2} - \frac{45}{3000 + s}$$

In[19]:= **IL1 = $\frac{R2\,(IL0\,L + v1)}{R2 + L\,s}$ * 1 / R2**

Out[19]= $$\frac{\frac{1}{1000} + \frac{450 + \frac{111\,s}{1000} + \frac{s^2}{200000}}{s\left(9 + \frac{3\,s}{500} + \frac{s^2}{1000000}\right)}}{5 + \frac{s}{1000}}$$

In[20]:= **Factor[IL1]**

Out[20]= $$\frac{90000000 + 6000\,s + s^2}{s\,(3000 + s)^2}$$

In[21]:= **Apart[IL1]**

Out[21]= $$\frac{10}{s} - \frac{27000}{(3000 + s)^2} - \frac{9}{3000 + s}$$

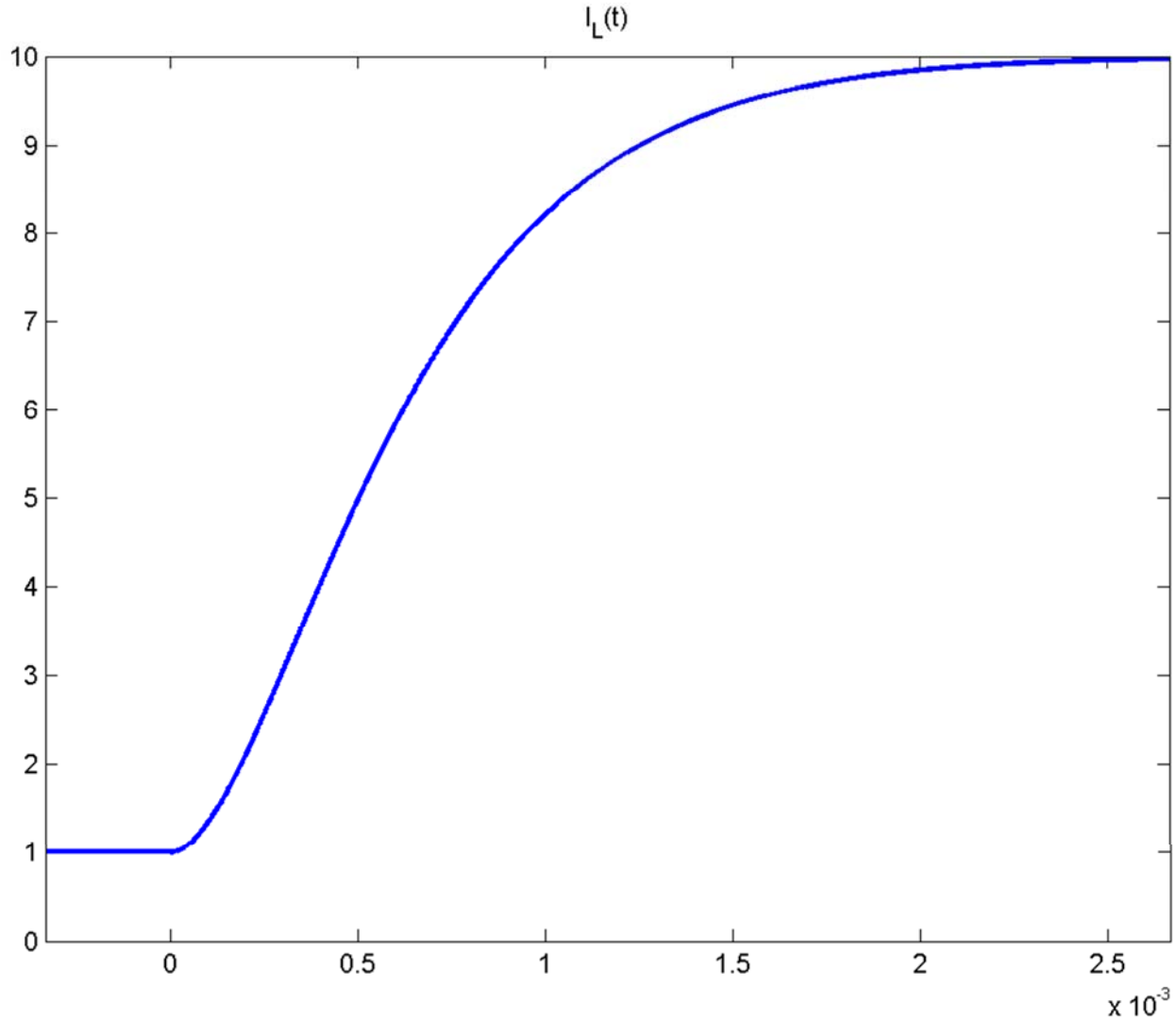
$I_L(t)$
10
9
8
7
6
5
4
3
2
1
0
0
0.5
1
1.5
2
2.5
x 10^{-3}

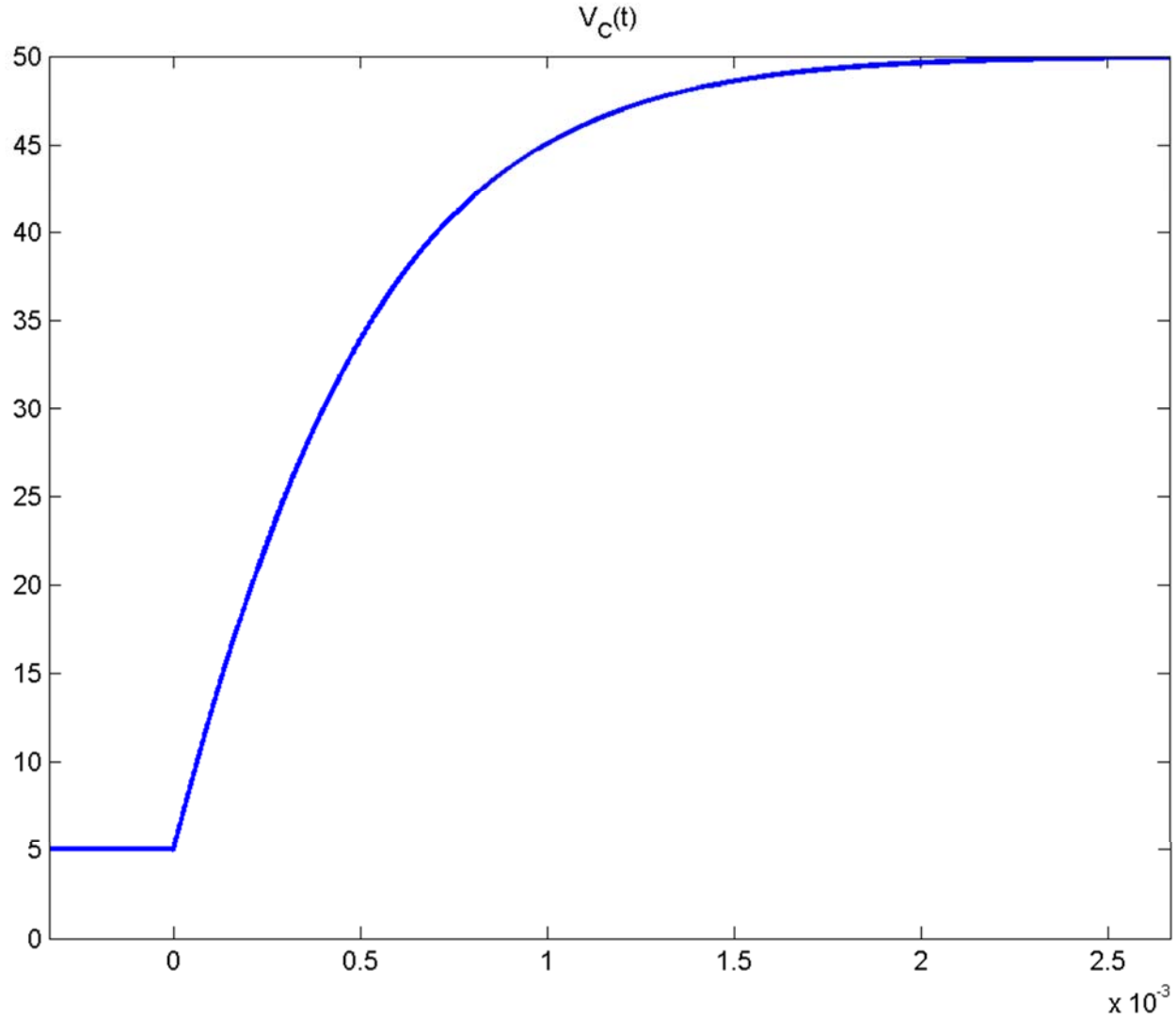
$V_C(t)$
50
45
40
35
30
25
20
15
10
5
0
0
0.5
1
1.5
2
2.5
x 10^{-3}